WINCO®

30PTOC4

27,600 WATTS

Rugged Design

Our own WINCO gearcases have proven their strength and durability for over 60 years and will keep doing so into the future.

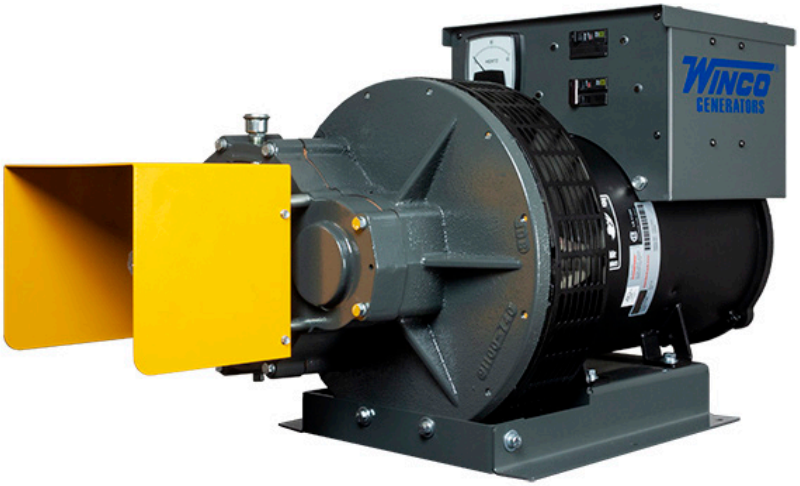

Brushless Industrial Genend

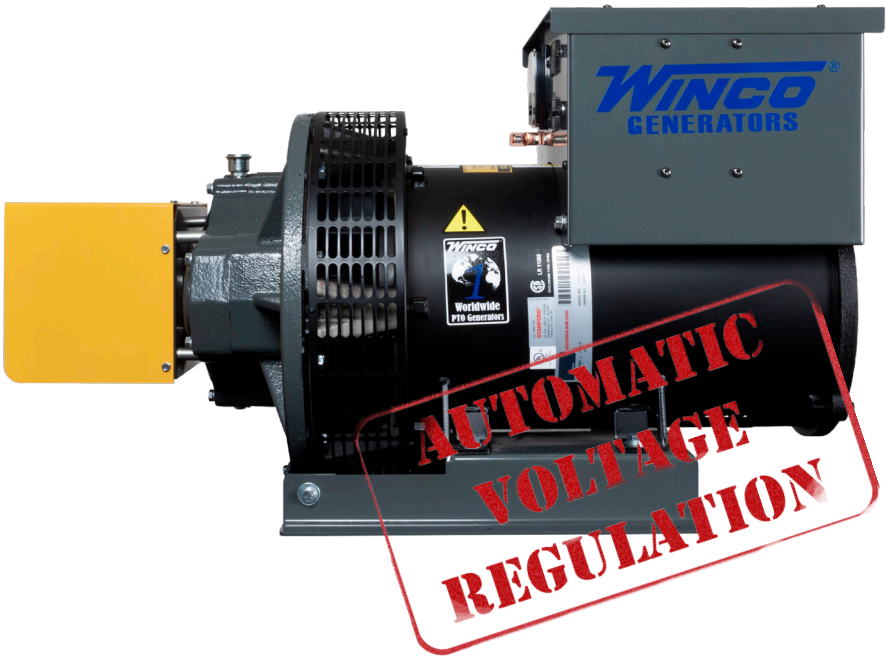

Frequency Meter

PTO Shield

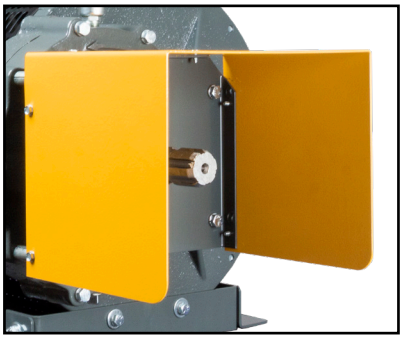

1 3/8" 6-Spline

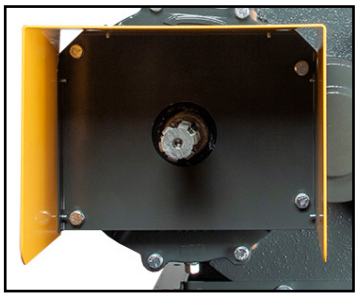

Receptacle Panel

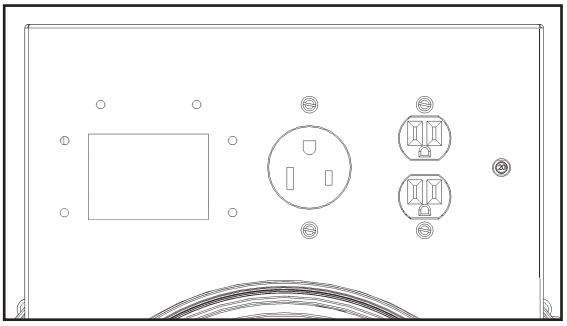

ELECTRICAL

		STANDBY (150/40C)			CONTINUOUS (105/40C)				
MODEL NUMBER	VOLTS	WATTS	AMPS 1.0 PF	AMPS 0.8 PF	WATTS	AMPS 1.0 PF	AMPS 0.8PF	CIRCUIT BREAKER	MOTOR STARTING(1)
27PTOC4-03	120/240 1-PH	27,600	115	N/A	23,500	98	N/A	125	10 HP
30PTOC4-04	120/208 3-PH	31,600	87	109	26,900	71	102	100	11 HP
30PTOC4-17	120/240 3-PH	31,600	76	94	26,900	71	88	100	11 HP
35PTOC4-18	277/480 3-PH	36,000	43	54	30,600	36	46	50	12 HP

NOTES: (1) Code G capacitor motor.

30PTOC4

PTO INPUT SPEED	540 RPM
INPUT SHAFT SIZE	13/8" 6-SPLINE
REQUIRED INPUT HP(1)	
27PTOC4-03	54
30PTOC4-04	63
30PTOC4-17	63
30PTO14-18	72
FREQUNCY METER	STANDARD
NEUTRAL BONDED	YES
GROUND LUG	YES
GEARCASE OIL	SAE 85W-90-140 - 1 PINT

(1)Required HP at PTO of tractor for full rated power. Each 2 HP equals approximately 1kW of electric power.

SHIPPING

SHIPPING DIMENSIONS (L x W x H)	43.5" x 27" x 26"
SHIPPING WEIGHT	
SINGLE PHASE	452 LBS
THREE PHASE	472 LBS
FREIGHT CLASS	65

OPTIONAL ACCESSORIES

PTO TRAILER	WITH PNEUMATIC TIRES
PTO DRIVE SHAFT	1 3/8" X 1 3/8" 6-SPLINE
THREE POINT-HITCH KIT	CATEGORY 2
GEARCASE UPGRADE	1000 RPM
TRANSFER SWITCH	MANUAL

GENEND

SINGLE PHASE(1)	4 LEAD
WINDING NUMBER	706
THREE PHASE	12 LEAD
WINDING NUMBER	711
AVR	AS540 - AUX WINDING
VOLTAGE REGULATION	+/- 1%
TOTAL HARMONIC DISTORTION	< 5%
GENERATOR SPEED	1800 RPM
STATOR WINDING	DOUBLE LAYER CONCENTRIC
ROTOR	2/3 PITCH
TELEPHONE INTERFERENCE	
SINGLE PHASE	TIF < 75
THREE PHASE	TIF < 50
INSULATION	CLASS H
120 VOLT RECEPTACLES(2)	(2) NEMA 5-20 20A
240 VOLT RECEPTACLES(2)	(1) NEMA 6-50 50A
FULL POWER ANDERSON RECEPTACLE	175 AMPS
FULL POWER ANDERSON PLUG	INCLUDED
UNIT WARRANTY(3)	3 YEARS

NOTES: (1) Unity (1.0) power factor (2) 480V has Anderson receptacle only.
(3) For more generator warranty, see operator's manual.

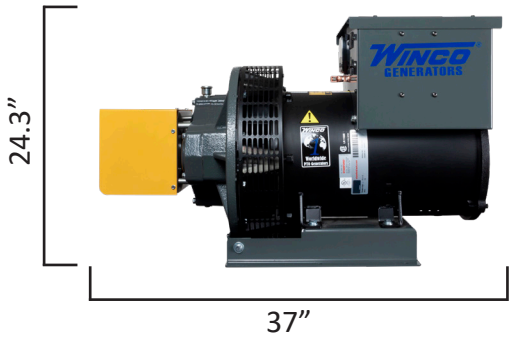

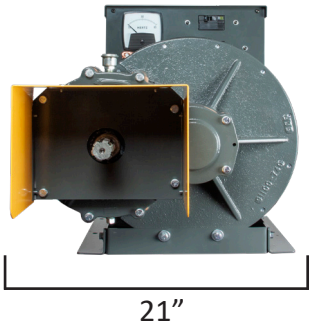

WINCO 225 S. Cordova Ave Le Center MN • 1-800-733-2112
www.wincogen.com

Specifications are subject to change without notice.