Westinghouse

USER MANUAL

REMOTE START

PUSH BUTTON
ELECTRIC START

ENGINE
START
STOP

DUAL FUEL

WGen3600DF

Dual Fuel Portable Generator

GASOLINE: 3600 Running Watts | 4650 Peak Watts
PROPANE: 3240 Running Watts | 4180 Peak Watts

SAVE THESE INSTRUCTIONS

Important safety instructions are included in this manual.

California Proposition 65 Warning

The engine exhaust from this product contains chemicals known to the state of California to cause cancer, birth defects or other reproductive harm.

California Proposition 65 Warning

Certain components in this product and its related accessories contain chemicals known to the state of California to cause cancer, birth defects or other reproductive harm. Wash hands after handling.

DISCLAIMERS:

All information, illustrations and specifications in this manual are based on the latest information available at the time of publishing. The illustrations used in this manual are intended as representative reference views only. Moreover, because of our continuous product improvement policy, we may modify information, illustrations and/or specifications to explain and/or exemplify a product, service or maintenance improvement. We reserve the right to make any change at any time without notice. Some images may vary depending upon which model is shown.

ALL RIGHTS RESERVED:

No part of this publication may be reproduced or used in any form by any means – graphic, electronic or mechanical, including photocopying, recording, taping or information storage and retrieval systems – without the written permission of MWE Investments LLC.

⚠ DANGER

This manual contains important instructions for operating this generator. For your safety and the safety of others, be sure to read this manual thoroughly before operating the generator. Failure to properly follow all instructions and precautions can cause you and others to be seriously hurt or killed.

WGen TECHNICAL SPECIFICATIONS

Model Number	Running Watts	Peak Watts	Gasoline Tank Size (G)	Rated Speed (RPM)	Ignition Type	Spark plug	Engine Disp (cc)	Stroke X Bore	Oil Capacity (L)	Oil Type	Fuel Type
WGen3600DF	Gas: 3600 Propane: 3240	Gas: 4650 Propane: 4180	4 Gallons	3600	TCI	F7TC	212cc	55X70	.6 L	10W30	Gasoline

NOTICE

This generator is NOT equipped with altitude carburetor modification. Even with a carburetor modification, engine horsepower will decrease about 3.5% for each 300 meter (1,000 foot) increase in altitude. The effect of altitude on horsepower will be greater if no carburetor modification is made. A decrease in engine horsepower will decrease the power output of the generator. Contact our service team to order altitude kits. See page 16 for altitude kit numbers.

HAVE QUESTIONS?

DO NOT RETURN THIS PRODUCT TO THE STORE

Email us at service@wpowereq.com

or call 1-855-944-3571

FOR YOUR RECORDS:

Date of Purchase:	
Generator Model Number:	
Purchased from Store/Dealer:	
Generator Serial Number:	

IMPORTANT: KEEP YOUR PURCHASE RECEIPT TO ENSURE TROUBLE-FREE WARRANTY COVERAGE.

PRODUCT REGISTRATION

To ensure trouble-free warranty coverage, it is important you register your Westinghouse generator.
You can register your generator by either:

1. Filling in the product registration form below and mailing to:
   Product Registration
   MWE Investments LLC
   777 Manor Park Drive
   Columbus, Ohio 43228

2. Registering your product Online at **www.westinghouseportablepower.com/register-your-product/**
   To register your generator you will need to locate the following information:

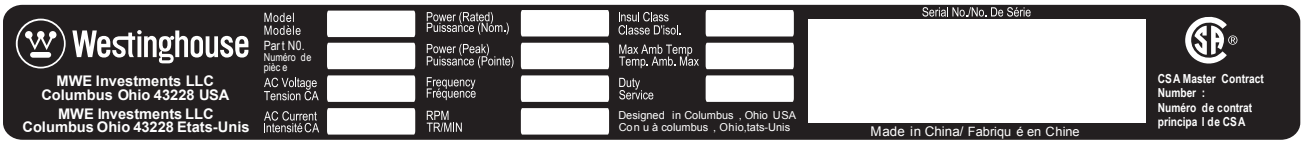

WESTINGHOUSE PRODUCT REGISTRATION FORM

PERSONAL INFORMATION

First Name: _____

Last Name: _____

Street Address: _____

Street Address: _____

City, State, ZIP: _____

Country: _____

Phone Number: _____

E-Mail: _____

GENERATOR INFORMATION

Model Number: _____

Serial Number: _____

Date Purchased: _____

Purchased From: _____

TABLE OF CONTENTS

WGEN3600DF TECHNICAL SPECIFICATIONS 2
PRODUCT REGISTRATION 3
For Your Records: 3
Product Registration 3
Product Registration Form 3

SAFETY 5
Safety Definitions 5
Safety Symbol Definitions 5
General Safety Rules 6
Safety Labels and Decals 7
Fuel Safety 9

UNPACKING 10
What Comes in the Box 10
Wheel Kit Accessories Box 10

ASSEMBLY 11
Installing Wheels and Feet 11
Installing the Battery 12

FEATURES 13
Generator Features 13
Control Panel Features 15

OPERATION 16
Before Starting the Generator 16
Location Selection 16
Grounding the Generator 16
High Altitude Operation/Conversion Kits 16
Power Cord 17
Using Westinghouse Power Cord 17
Engine Fluids and Fuel 18
Programming Remote Start Key Fob 18
Adding Gasoline to the Fuel Tank 19
Connecting the LPG/Propane Tank 19
Switching Fuel Sources 20
Starting the Generator 21
Starting on Gasoline 21
Starting on Propane 21
Stopping the Generator 22
Normal Operation 22
During an Emergency 22

MAINTENANCE 23
Maintenance Schedule 23
Engine Oil Maintenance 24
Engine Oil Specification 24
Checking Engine Oil 24
Adding Engine Oil 24
Changing Engine Oil 25
Air Filter Maintenance 25
Cleaning the Air Filter 25
Spark Plug Maintenance 26
Checking and Adjusting Valve Lash 27
Cleaning the Generator 27
Storage 27

TROUBLE SHOOTING 28

EXPLODED AND ENGINE VIEWS 30
WGen3600DF Exploded View 30
WGen3600DF Engine View 32

SCHEMATICS 33
WGen3600DF Schematic 33

SAFETY

SAFETY DEFINITIONS

The words DANGER, WARNING, CAUTION and NOTICE are used throughout this manual to highlight important information. Be certain that the meanings of these alerts are known to all who work on or near the equipment.

This safety alert symbol appears with most safety statements. It means attention, become alert, your safety is involved! Please read and abide by the message that follows the safety alerts symbol.

⚠ DANGER

Indicates a hazardous situation which, if not avoided, *will* result in death or serious injury.

⚠ WARNING

Indicates a hazardous situation which, if not avoided, *could* result in death or serious injury.

⚠ CAUTION

Indicates a hazardous situation which, if not avoided, *could* result in minor or moderate injury.

NOTICE

Indicates a situation which can cause damage to the generator, personal property and/or the environment, or cause the equipment to operate improperly.

NOTE: Indicates a procedure, practice or condition that should be followed in order for the generator to function in the manner intended.

SAFETY SYMBOL DEFINITIONS

Symbol	Description
	Safety Alert Symbol
	Asphyxiation Hazard
	Burn Hazard
	Burst/Pressure Hazard
	Don't leave tools in thearea
	Electrical Shock Hazard
	Explosion Hazard
	Fire Hazard
	Lifting Hazard
	Pinch-Point Hazard
	Read Manufacturer's Instructions
	Read Safety Messages Before Proceeding
	Wear Personal Protective Equipment (PPE)

SAFETY

GENERAL SAFETY RULES

⚠ DANGER

Never use the generator in a location that is wet or damp. Never expose the generator to rain, snow, water spray or standing water while in use. Protect the generator from all hazardous weather conditions. Moisture or ice can cause a short circuit or other malfunction in the electrical circuit.

Never operate the generator in an enclosed area. Engine exhaust contains carbon monoxide. Only operate the generator outside and away from windows, doors and vents.

⚠ WARNING

Voltage produced by the generator could result in death or serious injury.

- Never operate the generator in rain or a flood plain unless proper precautions are taken to avoid being subject to rain or a flood.
- Never use worn or damaged extension cords.
- Always have a licensed electrician connect the generator to the utility circuit.
- Never touch an operating generator if the generator is wet or if you have wet hands.
- Never operate the generator in highly conductive areas such as around metal decking or steel works.
- Always use grounded extension cords. Always use three-wire or double-insulated power tools.
- Never touch live terminals or bare wires while the generator is operating.
- Be sure the generator is properly grounded before operating.

⚠ WARNING

Gasoline, gasoline vapors & liquid petroleum gas (LPG) are extremely flammable and explosive under certain conditions.

- Always refuel the generator outdoors, in a well-ventilated area.
- Never remove the fuel cap with the engine running.
- Never refuel the generator while the engine is running. Always turn engine off and allow the generator to cool before refueling.
- Only fill fuel tank with gasoline.
- Keep sparks, open flames or other form of ignition (such as matches, cigarettes, static electric sources) away when refueling.
- Never overfill the fuel tank. Leave room for fuel to expand. Overfilling the fuel tank can result in a sudden overflow of gasoline and result in spilled gasoline coming in contact with HOT surfaces. Spilled fuel can ignite. If fuel is spilled on the generator, wipe up any spills immediately. Dispose of rag properly. Allow area of spilled fuel to dry before operating the generator.
- Wear eye protection while refueling.
- Never use gasoline as a cleaning agent.
- Store any containers containing gasoline or propane in a well-ventilated area, away from any combustibles or source of ignition.
- Check for fuel leaks after refueling. Never operate the engine if a fuel leak is discovered.

⚠ WARNING

Never operate the generator if powered items overheat, electrical output drops, there is sparking, flames or smoke coming from the generator, or if the receptacles are damaged.

Never use the generator to power medical support equipment.

Always remove any tools or other service equipment used during maintenance from the generator before operating.

NOTICE

Never modify the generator.

Never operate the generator if it vibrates at high levels, if engine speed changes greatly or if the engine misfires often.

Always disconnect tools or appliances from the generator before starting.

SAFETY

SAFETY LABELS AND DECALS

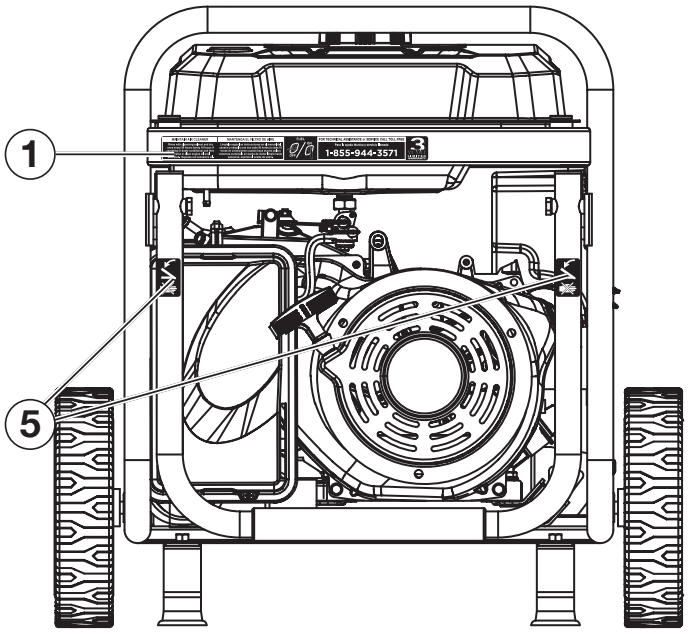

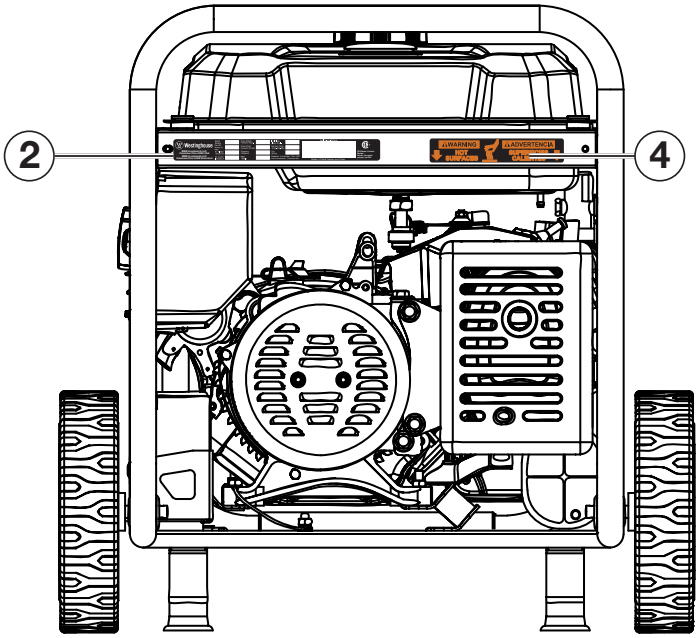

1

MAINTAIN AIR CLEANER	MANTENGA EL FILTRO DE AIRE	FUEL	FOR TECHNICAL ASSISTANCE or SERVICE CALL TOLL FREE
Rinse with cleansing solvent and dry once every 50 hours (every 10 hours if operating in dusty conditions) and then immerse in clean engine oil until saturated. Squeeze out excessive oil.	Límpielo según las instrucciones en el manual del usuario y séquelo una vez cada 50 horas (o cada 10 horas en condiciones cuando haya mucho polvo) entonces sumérjalo en aceite de motor limpio hasta saturarse, exprima el aceite de sobra.	OFF / ON	Para la ayuda técnica y servicio llamada **1-855-944-3571**

3 YEAR LIMITED WARRANTY

2

Westinghouse

MWE Investments LLC
Columbus Ohio 43228 USA
MWE Investments LLC
Columbus Ohio 43228 Etats-Unis

Model Modèle		Power (Rated) Puissance (Nom.)		Insul Class Classe D'isol.	
Part N0. Numéro de pièce		Power (Peak) Puissance (Pointe)		Max Amb Temp Temp. Amb. Max	
AC Voltage Tension CA		Frequency Fréquence		Duty Service	
AC Current Intensité CA		RPM TR/MIN		Designed in Columbus , Ohio USA Con u à columbus , Ohio,tats-Unis	

Serial No./No. De Série

Made in China/ Fabriqu é en Chine

CSA Master Contract Number : Numéro de contrat principa l de CSA

3

DANGER

Read owners manual before operating generator on LPG/propane. LPG/Propane is highly flammable. Leaking LP-gas can cause a fire or explosion if ignited. If you smell propane while you are operating unit, immediately shut off propane valve. Keep propane tank away from exhaust.

PELIGRO

Lea el manual del propietario antes de operar el generador con GLP / propano. GLP / propano es altamente inflamable. La fuga de gas LP puede causar un incendio o una explosión si se enciende. Si huele a propano mientras está operando la unidad, apague inmediatamente la válvula de propano. Mantenga el tanque de propano lejos del escape.

4

WARNING HOT SURFACES

ADVERTENCIA SUPERFICIES CALIENTES

5

6

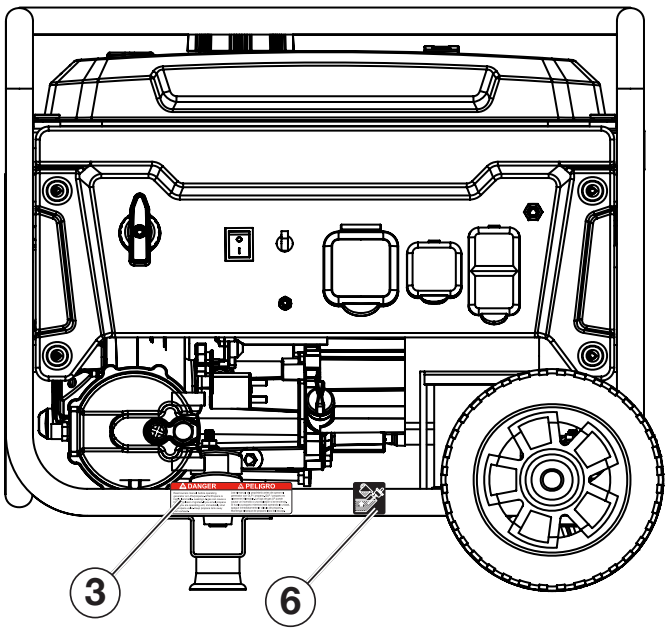

SAFETY

SAFETY LABELS AND DECALS

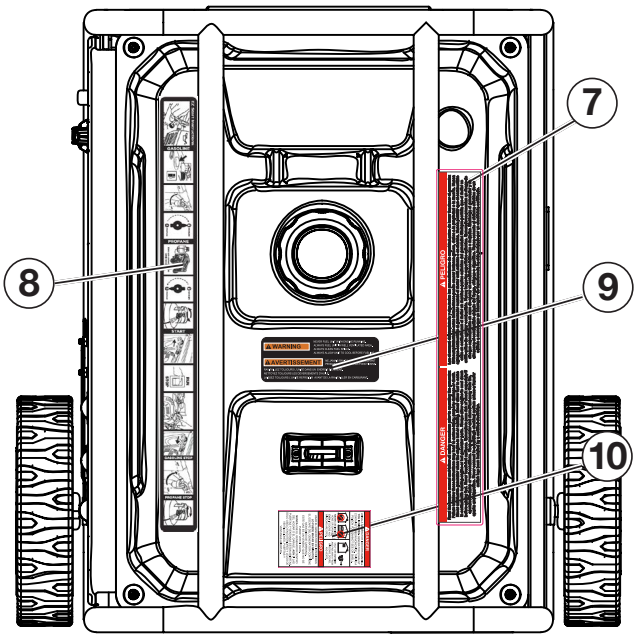

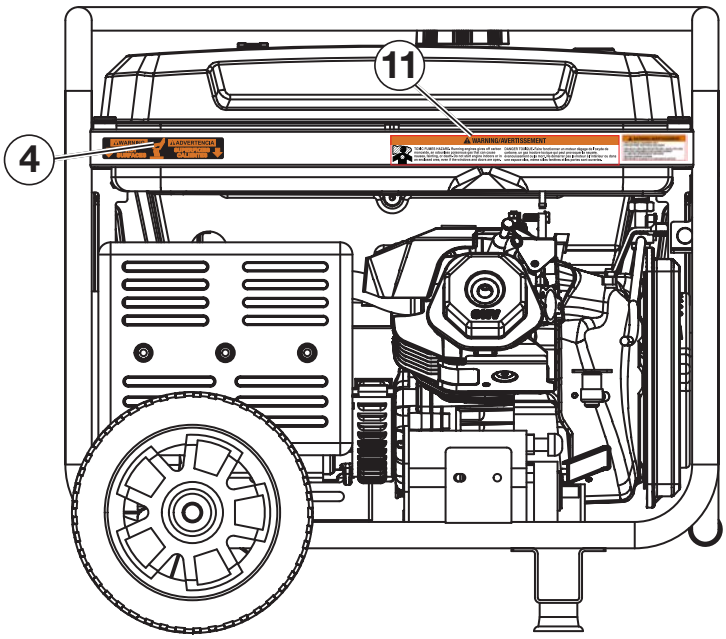

7

⚠ DANGER

Read the owner's manual and follow all safety procedures prior to operating the generator. Failure to follow these instructions may lead to serious injury, property damage or death. Never add fuel to generator when the engine is hot or running. Never allow fuel to come in contact with running engine or hot generator parts. Always allow engine to cool down before adding fuel. Never touch hot surfaces. Generators pose risk of shock especially if operated in damp or wet conditions. Keep generator and stored fuel away from fire, sparks and cigarettes. Never connect to a building's electrical system unless a transfer switch has been installed by a certified electrician.

⚠ PELIGRO

Lea el manual del propietario y siga todos los procedimientos de seguridad antes de hacer funcionar el generador. El incumplimiento de estas instrucciones puede causar lesiones graves, daños a la propiedad o la muerte. Nunca agregue combustible al generador cuando el motor está caliente o en marcha. Nunca permitir que el combustible entre en contacto con el motor en marcha o partes calientes del generador. Siempre permita que el motor se enfríe antes de agregar combustible. Nunca toque las superficies calientes. Generadores presenten un riesgo de choque especialmente en caso de operar en condiciones húmedas o mojadas. Mantenga el generador y se almacena el combustible alejado del fuego, chispas o cigarrillos. Nunca conecte al sistema eléctrico de un edificio a menos que un interruptor de transferencia ha sido instalado por un electricista certificado.

8

9

⚠ WARNING

NEVER FUEL UNIT WITH ENGINE RUNNING.
ALWAYS FUEL UNIT IN WELL VENTILATED AREA.
ALWAYS CLEAN FUEL SPILLS.
ALWAYS ALLOW UNIT TO COOL BEFORE FUELING.

⚠ AVERTISSEMENT

NE JAMAIS RAVITAILLER EN CARBURANT PENDANT QUE LE MOTEUR FONCTIONNE.
RAVITAILLEZ TOUJOURS L'UNITÉ DANS UN ENDROIT BIEN AÉRÉ.
NETTOYEZ TOUJOURS LES DÉVERSEMENTS D'HUILE.
LAISSEZ TOUJOURS L'UNITÉ REFROIDIR AVANT DE LA RAVITAILLER EN CARBURANT.

10

⚠ DANGER

USING A GENERATOR INDOORS **CAN KILL YOU IN MINUTES.** GENERATOR EXHAUST CONTAINS CARBON MONOXIDE. THIS IS A POISON YOU CANNOT SEE OR SMELL.

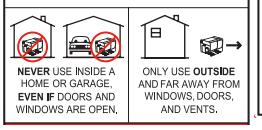

NEVER USE INSIDE A HOME OR GARAGE, **EVEN IF** DOORS AND WINDOWS ARE OPEN.

ONLY USE **OUTSIDE** AND FAR AWAY FROM WINDOWS, DOORS, AND VENTS.

⚠ PELIGRO

USAR EL GENERATOR EN INTERIORES **LO PUEDE MATAR EN MINUTOS.** EL ESCAPE DEL GENERATOR CONTIENE MONÓXIDO DE CARBONO. ESTE GAS ES UN VENENO QUE NO SE PUEDE VER NI OLER. **NUNCA** USE EL GENERADOR DENTRO DEL HOGAR O EL GARAJE, **AÚN SI** LAS PUERTAS Y VENTANAS ESTÁN ABIERTAS. SOLO USELO EN EXTERIORES Y LEJOS DE VENTILACIONES, PUERTAS Y VENTANAS ABIERTAS.

11

⚠ WARNING/AVERTISSEMENT

TOXIC FUMES HAZARD. Running engines gives off carbon monoxide, an odourless poisonous gas that can cause nausea, fainting, or death. Do not start engine indoors or in an enclosed area, even if the windows and doors are open.

DANGER TOXIQUE. Faire fonctionner un moteur dégage de l'oxyde de carbone, un gaz inodore toxique qui peut provoquer la nausée, évanouissement ou la mort. Ne démarrer pas le moteur à l'intérieur ou dans une espace clos, même si les fenêtres et les portes sont ouvertes.

⚠ WARNING/AVERTISSEMENT

FOR ELECTRICAL EQUIPMENT ONLY
POUR MATERIEL ELECTRIQUE SEULEMENT
FOR USE IN A WEATHER PROTECTED WELL VENTILATED AREA
EMPLOYEZ UNIQUEMENT DANS UN EMPLACEMENT A L'ABRI DES INTEMPERIES ET BIEN AERE
NEUTRAL BONDED TO FRAME
NEUTRE MIS À LA MASSE À LA CARCASSE DU MOTEUR

SAFETY

FUEL SAFETY

⚠ DANGER

Gasoline and liquid petroleum gas (LPG) are highly explosive and flammable. Explosions and fire can cause severe burns or death.

Gasoline and gasoline vapor (Gas)
- Gasoline is highly flammable and explosive.
- Gas expands and contracts with different temperatures.
- In case of a gas fire, do not attempt to extinguish the flame if the fuel shutoff valve is in the on position. Introducing an extinguisher to a generator with an open fuel valve could create an explosion hazard.
- Gas has a distinctive odor, this will help detect potential leaks quickly.
- Gas vapors can cause a fire if ignited.
- Gasoline is a skin irritant and needs to be cleaned up immediately if it comes in contact with the skin.

Liquid Petroleum Gas (Propane/LPG)
- LPG/Propane is highly flammable and explosive.
- Flammable gas under pressure can cause a fire or explosion if ignited.
- LPG/Propane can settle in low places because it is heavier than air.
- LPG/Propane has a distinctive odor added to help detect potential leaks.
- Always keep LPG/Propane tank in an upright position.
- When exchanging LPG/Propane tanks, be sure the tank value is the same type.
- In case of a LPG/Propane fire, do not attempt to extinguish unless the fuel supply can be shut off.
- LPG/Propane will burn the skin. Prevent skin contact at all times.

⚠ WARNING

Never use a gas container, LPG connector hose, LPG tank or any other fuel item that appears to be damaged.

When starting generator:
- Make sure that the gas cap, air filter, spark plug, fuel lines and exhaust system are properly in place.
- If you spill any gasoline on the tank, allow it to fully evaporate before operating.
- Make sure the generator and propane tank are on a flat surface before operating.
- If there is a propane odor do not start the unit because there may be a potential leak.
- Never place propane tank near engine exhaust.

When transporting or servicing the generator:
- Make certain the fuel shutoff valve is off and the fuel tank is empty.
- Make sure the LPG tank and LPG hose is not attached to the generator.
- Disconnect the spark plug wire.

When storing the generator:
- Store away from sparks, open flames, pilot lights, heat and other sources of ignition.
- Do not store gas or LPG tank near furnaces, water heaters or any other appliances that produce heat or have automatic ignitions.

⚠ CAUTION

Only use approved LPG tanks with OPD (overfilling prevention device) valve. Always keep the tank in a vertical position with the valve on top and installed at ground level on a flat surface. Do not allow tanks to be around any heat source and make sure it is not exposed to the sun, rain and dust. When transporting and storing, turn off the tank valve and fuel valve, and disconnect the tank. Make sure to always cover the generator and tank outlet with protective plastic caps.

⚠ CAUTION

Do not allow children to tamper or play with the propane tank or hose connections.

⚠ WARNING

If there is a strong smell of propane while operating the generator close the valve on the propane tank immediately. Once the propane is off, use soapy water to check for leaks on the hose and connections on the tank valve and the generator. Do not smoke or light a cigarette or check for leaks using any open flame source such as a match or lighter. If a leak is found contact a qualified technician to inspect and repair the LPG system before using the generator.

UNPACKING

⚠ CAUTION

Always have assistance when lifting the generator. The generator is heavy; lifting it could cause bodily harm.

Avoid cutting on or near staples to prevent personal injury.

Tools required – box cutter or similar device.

1. Carefully cut the packing tape on top of the carton.
2. Fold back top flaps to reveal the manual.
3. Remove the Wheel Kit Accessories cardboard box.
4. Carefully cut two sides of the carton to remove the generator.

WHAT COMES IN THE BOX

Owners Manual
Quick Start Guide/Maintenance Schedule
Remote Start Key Fob (1)
Battery Charger (1)
LPG Hose (1)
.6 Liter Bottle of SAE 10W30 Oil (1)
Spark Plug Socket Wrench (1)
Wheel Kit Accessories Box
Funnel (1)

WHEEL KIT ACCESSORIES BOX

Open the Wheel Kit Accessories box and verify the contents against the list right. If any parts are missing, contact our service team at service@wpowereq.com or call 1-855-944-3571.

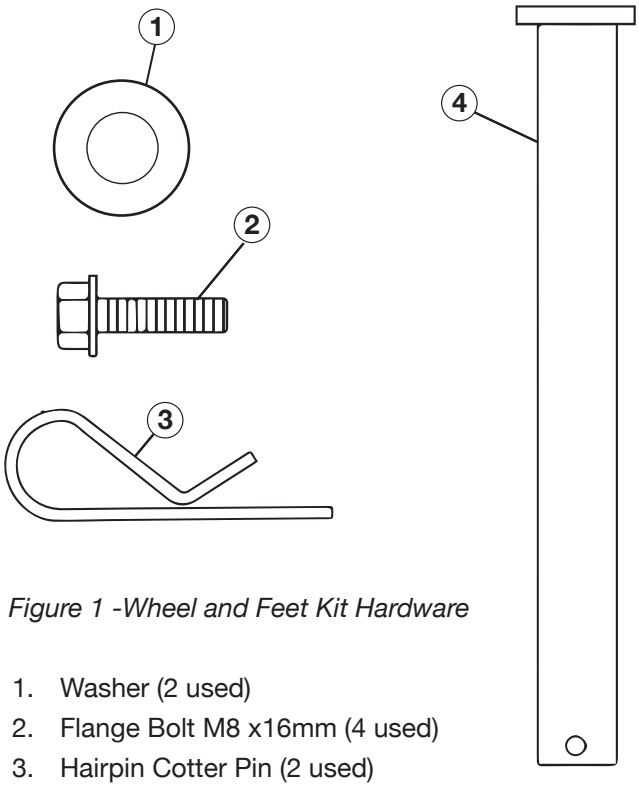

Figure 1 -Wheel and Feet Kit Hardware

1. Washer (2 used)
2. Flange Bolt M8 x16mm (4 used)
3. Hairpin Cotter Pin (2 used)
4. Wheel Axle Pin (2)

ASSEMBLY

INSTALLING WHEELS AND FEET

BEFORE ASSEMBLING THE GENERATOR, REVIEW THE SAFETY SECTION STARTING ON PAGE 5.

⚠ CAUTION	
	Never lift the generator without assistance. The generator is heavy and lifting without assistance could result in personal injury.
	Never use the handles as a lifting point to support the entire weight of the generator. Only use the handles to move the generator by lifting the handles and using the wheels to move the generator.
	Use caution when collapsing the handles. Hands and fingers could get caught and pinched.

NOTICE

Assembling the generator will require lifting the unit on one side. Make sure all engine oil and fuel are drained from the unit prior to assembling. Once assembled, the wheel kit is not intended for on-road use. The wheel kit is designed for use on this generator only.

INSTALLING FEET TO FRAME

1. Place generator on a flat surface.
2. Place a piece of cardboard or other soft material to tip the generator onto, to protect the frame paint and prevent the generator from sliding. Tip the generator onto the side.
3. Install the mounting foot to the frame using M8 flange bolts.

   1 - Mounting Feet
   2 - Flange Bolts M8

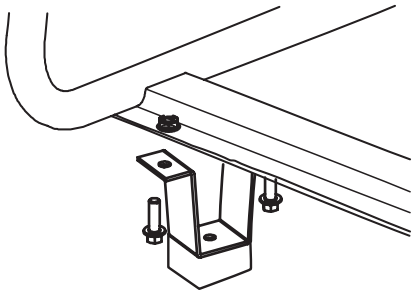

Figure 1 - Assemble Mounting Feet to Frame

INSTALLING WHEELS TO FRAME

1. Insert axle pin through washer and wheel.

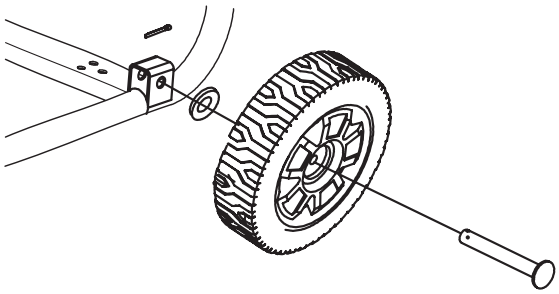

Figure 2 -Wheel Assembly

2. Install the wheel with axle pin through the axle bracket on the frame. The eye of the bolt should be facing toward the inside of the generator.

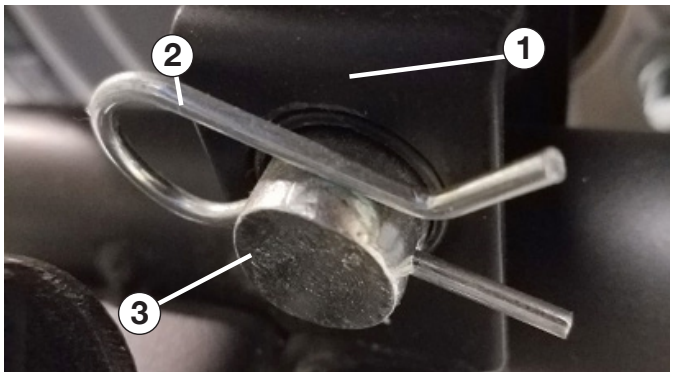

Figure 3 - Assemble Wheel to Frame

3. Install the hairpin cotter through the axle pin to lock it in place.

   1 - Axle Bracket
   2 - Hairpin Clip
   3 - Axle Pin

4. Repeat previous steps on other wheel.

ASSEMBLY

INSTALLING THE BATTERY

⚠ WARNING

To avoid electric shock:

- ALWAYS connect the positive (+) battery cable (red boot) first when connecting battery cables.
- ALWAYS disconnect the negative (-) battery cable (black boot) first when disconnecting battery cables.
- NEVER connect the negative (-) battery cable (black boot) to the positive (+) post on the battery.
- NEVER connect the positive (+) battery cable (red boot) to the negative (-) post on the battery.
- NEVER touch both battery posts simultaneously.
- NEVER place a metal tool across both battery posts.
- ALWAYS use insulated or nonconducting tools when installing the battery.

1. Secure the positive (+) battery cable (red boot) tightly to the positive (+) battery post. Make sure boot is over battery post.

2. Carefully remove the protective wrapping around the lug of the negative (-) battery cable (black boot).

3. Locate negative (-) cable attached to alternator cable, remove tie and route to the negative (-) battery post. See figure 4 below for location of negative (-) cable.

Figure 4 - (1) Negative Cable

4. Pull back the black boot and securely attach the negative (-) battery cable (black boot) to the negative (-) battery post as shown in Figure 5. Replace the black boot so it protects the cable lug and battery post.

Figure 5 - Attaching the Negative (-) Battery Wire (black)

1 - Positive (+) Battery Cable (Red)
2- Negative (-) Battery Cable (Black)

NOTICE

The electric start generator is equipped with a battery charging feature. Once the engine is running, a small charge is supplied to the battery via the battery cables and will slowly recharge the battery.

NOTICE

Even if you do not plan on using the electric start feature it is recommended that you install the battery to complete the circuit in order for the automatic choke mechanism to work properly.

FEATURES

1. **Fuel Selector Switch:** Used to select and turn on gasoline or propane fuel source.
2. **Push Button Electric Start:** Starts and stops the engine.
3. **Engine Control Switch/Battery Disconnect:** Allows fuel to flow to engine and energizes the ignition system. Also, disconnects battery power when in **STOP** position.
4. **Fuel Cap:** Close until clicking sound is heard.
5. **Control Panel:** Contains the circuit breakers and outlets.
6. **Battery:** Included for electric start models.
7. **Oil Fill Plug/Dipstick:** Must be removed to add and check oil.
8. **Oil Drain Plug:** Must be removed to drain engine oil.
9. **Propane Hook Up:** Hook up your propane tank with the LPG hose provided to this inlet.
10. **Never Flat Wheels:** For easy portability.
11. **Auto Choke:** Automatically sets the engine choke when starting engine.
12. **Gas Fuel Shut Off Valve:** Controls the flow of gas to the engine.
13. **Single Piece Handle:** Includes rubber grip. Allows you to easily push or pull unit with one hand.
14. **Air Filter:** Rotate knob to unlock air cleaner cover for easy access.

FEATURES

1. **Fuel Gauge:** Indicates gas level.
2. **Spark Plug Boot (Wire):** Must be removed when servicing the engine or the spark plug.
3. **CARB Canister:** Required for models sold into and used in California.
4. **Muffler and Spark Arrester:** Avoid contact until engine is cooled down. Spark arrestor prevents sparks from exiting the muffler. It must be removed for servicing.

FEATURES

CONTROL PANEL FEATURES

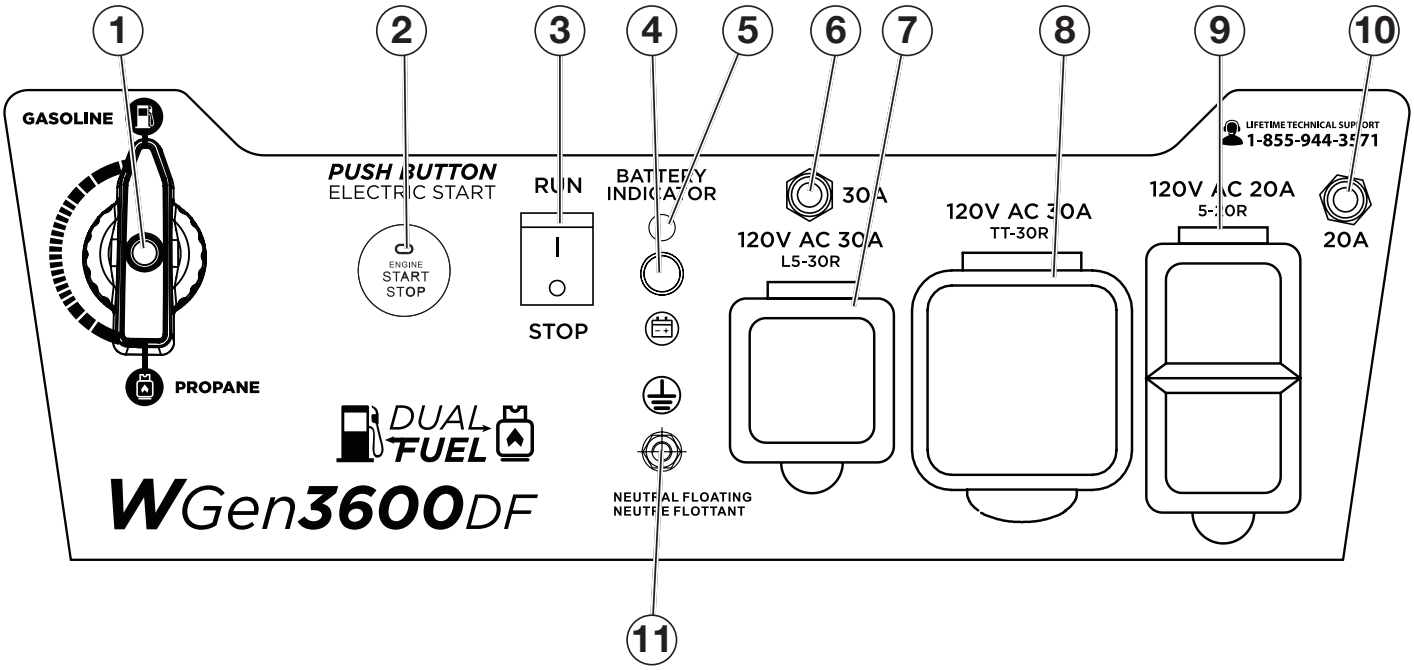

1. **Fuel Selector Switch:** Select and turn on gas or propane.

2. **Push Start Button:**
   - Push for 1 second to automatically start the engine. Green light shows when unit is on.
   - Push again to stop the engine.

3. **Engine Control Switch/Battery Disconnect:** Switch to **STOP** to stop the engine. When in **STOP** position it prevents the unit from drawing power from the battery. Switch to **RUN** before starting engine.

4. **Battery Charge Port:** Used to charge the battery when the unit is off (battery charger included).

5. **Battery Indicator Light:** When light is illuminated, the battery is connected.

6. **30-Amp Circuit Breaker:** Circuit breaker limits the current that can be delivered through the 120-volt outlet to 30amps.

7. **120-Volt, 30 Amp Twistlock Outlet (L5-30R):** Outlet can supply 120V output.

8. **120-Volt 30 Amp Outlet (TT-30R):** Travel Trailer outlet can supply a maximum of 30 amps and 120 volts.

9. **120-Volt, 20-Amp Duplex Outlets (5-20R):** Each outlet is capable of carrying a maximum of 20 amps on a single receptacle or a combination of both receptacles.

10. **20-Amp Circuit Breaker:** Circuit breaker limits the current that can be delivered through the 120-volt duplex outlets to 20amps.

11. **Ground Terminal:** The ground terminal is used to ground the generator.

OPERATION

BEFORE STARTING THE GENERATOR

BEFORE STARTING THE GENERATOR, REVIEW SAFETY SECTION STARTING ON PAGE 5.

Location Selection – Before starting the generator, avoid exhaust and location hazards by verifying:

- You have selected a location to operate the generator that is outdoors and well ventilated.
- You have selected a location with a level and solid surface on which to place the generator.
- You have selected a location that is at least 6 feet (1.8 m) away from any building, other equipment or combustible material.
- If the generator is located close to a building, make sure it is not located near any windows, doors and/or vents.

⚠DANGER

Using a generator indoors
CAN KILL YOU IN MINUTES.
Generator exhaust contains carbon monoxide.
This is a poison you cannot see or smell.

NEVER use inside a home or garage, **EVEN IF** doors and windows are open.	Only use **OUTSIDE** and far away from windows, doors, and vents.

Avoid other generator hazards.
READ MANUAL BEFORE USE.

⚠WARNING

Always operate the generator on a level surface. Placing the generator on non level surfaces can cause the generator to tip over, causing fuel and oil to spill. Spilled fuel can ignite if it comes in contact with an ignition source such as a very hot surface.

Do not operate a device plugged into the USB ports. Prolonged exposure to engine exhaust can cause serious injury or death. While charging a device do not place on the exhaust side of the generator. Extreme heat caused by exhaust can damage the device, and cause a potential fire hazard.

NOTICE

Only operate the generator on a solid, level surface. Operating the generator on a surface with loose material such as sand or grass clippings can cause debris to be ingested by the generator that could:
• Block cooling vents
• Block air intake system

Weather – Never operate your generator outdoors during rain, snow or any combination of weather conditions that could lead to moisture collecting on, in or around the generator.

Dry Surface – Always operate the generator on a dry surface free of any moisture.

No Connected Loads – Make sure the generator has no connected loads before starting it. To ensure there are no connected loads, unplug any electrical extension cords that are plugged into the control panel receptacles.

NOTICE

Starting the generator with loads already applied to it could result in damage to any appliance being powered off the generator during the brief start-up period.

Grounding the Generator – The National Electric Code (NEC), as well as many local electrical codes, may require the generator to be connected to earth ground. The most common application that requires a ground rod is when you are using the generator as a separately derived system to provide back up power to your house. Typically this is when a transfer switch has a switched neutral.

As the generator application has many variables that cannot be determined by the manufacturer of the generator, a licensed electrician will need to determine if a grounding rod is needed.

If a licensed electrician has determined the application requires a ground rod, make sure it is connected to earth ground by connecting the ground terminal on the control panel to earth ground using copper wire (minimum 10 AWG). Consult a qualified electrician for local grounding requirements.

⚠WARNING

Be sure the generator is properly connected to earth ground before operating. The generator must be grounded to prevent electrical shock due to faulty appliances.

High Altitude Operation
Engine power is reduced the higher you operate above sea level. Output will be reduced approximately 3.5% for every 1000ft of increased altitude from sea level. This is a natural occurrence and cannot be adjusted by engine. Increased exhaust emissions can also result due to increased fuel mixture. Other issues include hard starting, increased fuel consumption and spark plug fouling. Contact our service team **1-855-944-3571** for altitude part kits.
High Altitude Carburetor Kit Part Number: 140543
High Altitude DF Regulator Part Number: 140560
Note: You must purchase the Dual Fuel Regulator along with carburetor kit on the WGen3600DF

OPERATION

POWERCORD

Using Extension Cords
Westinghouse Portable Power assumes no responsibility for the content within this table. The use of this table is the responsibility of the user only. This table is intended for reference only. The results produced by using this table are not guaranteed to be correct or applicable in all situations as the type and construction of cords are highly variable. Always check with local regulations and a licensed electrician prior to installing or connecting an electrical appliance

Extension Cord Wire Gauge Size

	LENGTH OF EXTENSION CORD (ft)								
AMPS	**10**	**20**	**30**	**40**	**50**	**60**	**80**	**100**	**120**
5	20	18	16	14	12	12	10	10	8
10	18	16	14	12	12	10	10	8	8
15	16	14	12	12	10	10	8	8	6
20	14	12	12	10	10	8	8	6	6
25	12	12	10	10	8	8	6	6	6
30	12	10	10	8	8	6	6	6	6
35	10	10	8	8	6	6	6	6	6

Using Westinghouse Power Cord
Use the extension cord chart to determine the size of the conductor for extension cord applications. Determine the distance of the generator to the appliance on the top line of the chart. Then select the rated amperage of the generator on the left side of the chart. Where the two meet is the size of the conductor required for the application.

The WCG25 power cord is connected to the generator at the 120/240 plug. The opposite end of the power cord is a fan tail receptacle with 2 green receptacles and 2 red receptacles. Each receptacle is rated at 120 volts AC. To balance the load on the generator's alternator, use the red and green identifiers on the fan tail receptacle. To keep the load balanced, connect the loads so that both color receptacles are used. An example is one in red and one in green. Do not connect 2 in red and none in green, or 2 in green and none in red. If only one color receptacle is used with multiple loads, the alternator may experience an unbalanced load, causing undue vibration to generator.

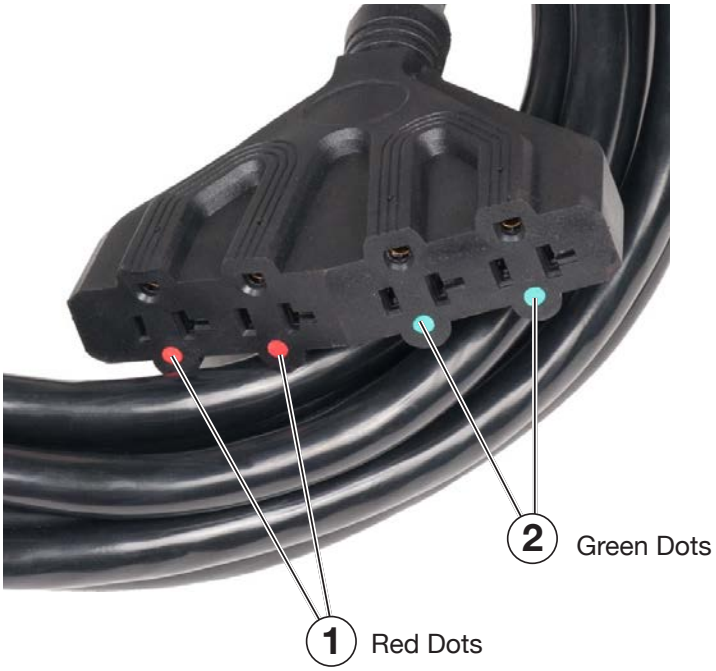

Figure 6 - WCG25 Extension Cord

OPERATION

ADDING / CHECKING ENGINE FLUIDS AND FUEL

BEFORE ADDING/CHECKING ENGINE FLUIDS AND FUEL, REVIEW SAFETY SECTION STARTING ON PAGE 5.

⚠ DANGER

Filling the fuel tank with gasoline while the generator is running can cause gasoline to leak and come in contact with hot surfaces that can ignite the gasoline.

Before starting the generator, always check:

- Level of Engine oil
- Level of gasoline in the fuel tank
- Secured connection to an undamaged LPG tank

It is not safe to add gasoline to the fuel tank or engine oil to the engine while the engine is running or the engine and muffler are hot.

CHECKING AND / OR ADDING ENGINE OIL

⚠ WARNING

Internal pressure can build in the engine crankcase while the engine is running. Removing the oil fill plug/ dipstick while the engine is hot can cause extremely hot oil to spray out of the crankcase and can severely burn skin. Allow engine oil to cool for several minutes before removing the oil fill plug/ dipstick.

The unit as shipped does not contain oil in the engine. You must add engine oil before starting the generator for the first time. See *Checking Engine Oil* and *Adding Engine Oil* on page 24 for instructions on checking engine oil level and the procedure for adding engine oil.

NOTICE

The engine does not contain engine oil as shipped. Attempting to start the engine can damage engine components. The owner of the generator is responsible to ensure the proper oil level is maintained during the operation of the generator. Failure to maintain the proper oil level can result in engine damage.

NOTICE

During the first five hours of operating the generator make sure to not exceed 50% of the rated running watts until the unit is broken in properly. Make sure to vary to load occasionally to allow stator windings to heat and cool. Adjusting the load will also help seat piston rings. Check oil more often during the first couple times of operating the generator.

NOTICE

Weather will affect engine oil performance. Change the type of engine oil used based on weather conditions to suit the engine needs.

PROGRAMMING THE GENERATOR FOR REMOTE START

NOTICE

The key fob included with the generator should come already paired with the unit. If it does not you can follow the directions below to reconnect. If your unit was shipped without a key fob please contact our customer support team.

⚠ WARNING

Always make sure the area around the generator is clear of bystanders before using the remote start to start the generator.

The generator can be started remotely from up to a maximum of 109 yards (100 M) away using the remote start key fob with new, fully charged batteries in the key fob. As the batteries' state of charge in the key fob reduces, the distance to start the generator will also reduce.

Before the generator can be started, an initial start-up procedure must be performed so the generator and the key fob recognize each other. If the key fob is replaced, you will need to go through this procedure with the new fob.

1. Turn the engine control switch to the RUN position.
2. Push and hold the red **REMOTE PAIRING** button on the side of the control panel for 3 seconds.
3. Press and hold the **STOP** button on the remote start key fob, the indicator light (see 1 below) at the top of the remote will flicker once.

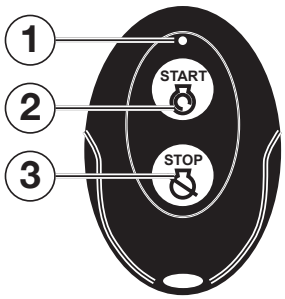

Remote Start Key Fob
1 - Pairing Indicator light
2 - Start Button | 3 - Stop Button

4. Press and hold the **START** button on the remote start key fob, the indicator light at the top of the remote will flicker once.
5. Press and hold the **REMOTE PAIRING** button for 3 seconds. The generator is now programmed to start remotely

OPERATION

ADDING GASOLINE TO THE FUEL TANK

BEFORE ADDING GAS TO THE TANK PLEASE REVIEW FUEL SAFETY SECTION ON PAGE 9

⚠ WARNING

Never refuel the generator while the engine is running.

Always turn the engine off and allow the generator to cool before refueling.

Required Gasoline – Only use gasoline that meets the following requirements:

- Unleaded gasoline only
- Gasoline with maximum 10% ethanol added
- Gasoline with an 87 octane rating or higher

Filling the Fuel Tank – Follow the steps below to fill the fuel tank:

1. Shut off the generator.
2. Allow the generator to cool down so all surface areas of the muffler and engine are cool to the touch.
3. Move the generator to a flat surface.
4. Clean area around the fuel cap.
5. Remove the fuel cap by rotating counterclockwise.
6. Slowly add gasoline into the fuel tank. Be very careful not to overfill the tank. The gasoline level should NOT be higher than the filler neck (see Figure 7).
7. Install the fuel cap by rotating clockwise until you hear a click, indicating the cap is completely installed.

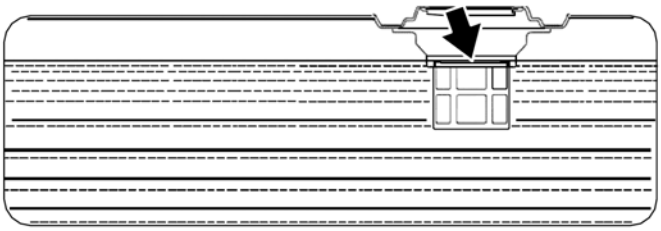

Figure 7 - Maximum Gasoline Fill Level

⚠ CAUTION

Avoid prolonged breathing of gasoline vapors.

CONNECTING THE LPG/PROPANE TANK

BEFORE CONNECTING PROPANE TANK TO THE GENERATOR PLEASE REVIEW FUEL SAFETY SECTION ON PAGE 9

Connecting LPG Tank

1. Make sure the generator is off, on a flat surface in well ventilated area.
2. Make sure propane tank valve is in the off position.
3. Make sure the fuel selector switch on the generator control panel is pointing downward to “Propane”.
4. Remove the plastic cover on the generator propane inlet valve.
5. Using your fingers tighten the LPG hose (included) end below to the generator propane inlet. DO NOT OVER-TIGHTEN 35-88 lb-in maximum.

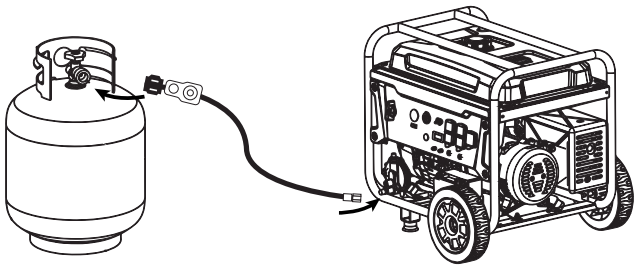

6. Attach the other end of the hose to a tank of LPG/ Propane and hand tighten.
7. Check all connections for leaks by wetting the fittings with soapy water. Anywhere that bubbles appear or grow indicates a leak in the connection. If a leak exists at a fitting then turn off the tank valve and tighten the fitting. Turn the gas back on and recheck with soapy water again. If the leak continues or if the leak is not at a fitting then do not use the generator and contact customer service.

NOTICE

- Use only standard 20 or 30 pound capacity LPG tanks with Type 1, right hand Acme threads.
- Verify the requalification date on the tank has not expired.
- All new tanks must be purged of air and moisture prior to filling. Used tanks that have not been plugged or kept closed must also be purged
- The purging process should be done by a LPG supplier. (Tanks from an exchange supplier should have been purged and filled properly already)
- Always position the tank so the connection between the valve and the gas inlet won’t cause sharp bends or kinks in the hose.

⚠ WARNING

Do not start generator if you smell propane. This may result in explosion hazard. Do not use provided LPG hose for any other appliances. Always turn off the propane tank and disconnect LPG hose when not in use.

OPERATION

BEFORE STARTING THE GENERATOR

BEFORE STARTING THE GENERATOR, REVIEW SAFETY SECTION STARTING ON PAGE 5.

Before attempting to start the generator, verify the following:

- The engine is filled with engine oil. See *Checking Engine Oil* on page 24.
- The generator is situated in a proper location (Location Selection on page 16).
- The generator is on a dry surface (*Weather and Dry Surface* on page 16).
- All loads are disconnected from the generator (*No Connected Loads* on page 16).
- The generator is properly grounded the Generator (page 16).
- Propane connection is secure with no leaks or damage. See *Connecting LPG Tank* on page 19.

⚠ DANGER

Never use the generator in a location that is wet or damp. Never expose the generator to rain, snow, water spray or standing water while in use. Protect the generator from all hazardous weather conditions. Moisture or ice can cause a short circuit or other malfunction in the electrical circuit.

Never operate the generator in an enclosed area. Engine exhaust contains carbon monoxide. Only operate the generator outside and away from windows, doors and vents.

NOTICE

The engine is equipped with a low oil shutdown switch. If the oil level becomes low, the engine may shut down and not start until the oil is filled to the proper level. Poor oil quality may interfere with the operation of the low oil shutdown switch.

The owner of the generator is responsible to ensure the proper oil level is maintained during the operation of the generator. Failure to maintain the proper oil level can result in engine damage.

NOTICE

When operating on LPG it is common for frost to form on the tank and regulators. This is not an indication of a problem. The amount of frost that forms can be affected by the size of the container, the amount of fuel being used, the humidity of the air and other operating conditions. In standard use this frost may reduce flow of gas and lower performance. If frost becomes an issue try exchanging fuel tanks to allow the first tank to warm up. You can also temporarily warm the tank up by pouring warm water over the top of the propane tank.

SWITCHING FUEL SOURCES

BEFORE ADDING GAS TO THE TANK PLEASE REVIEW FUEL SAFETY SECTION ON PAGE 9

The below assumes that the propane fuel line is already attached to the generator securely and safely.

While the unit is running simply turn the **FUEL SELECTOR** knob to the desired fuel source. If you want to switch from gasoline to propane make sure the propane tank valve is open before you switch. When you move from propane to gasoline shut the propane valve after you have switched to gas.

NOTICE

If you do not plan on operating the unit on propane do not leave the propane tank valve open.

When starting on propane the engine may run rough for a few seconds while it purges gasoline in the carburetor.

If the engine fails when switching fuel sources simply restart the unit on the fuel source that you switched to.

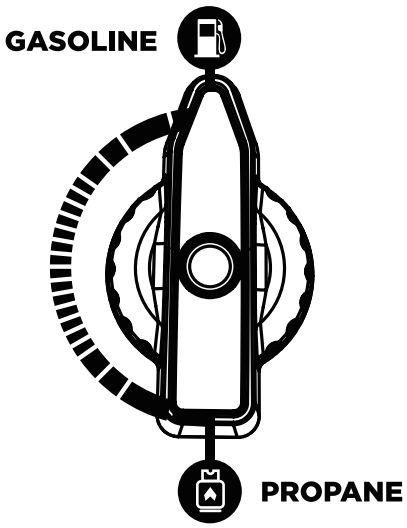

OPERATION

STARTING THE GENERATOR

1. Move generator to a flat surface outside in a well ventilated area.

2. Check oil levels (see *Adding Engine Oil* page 24*).*

3. Verify the battery is installed and both battery cables are attached to their corresponding polarity. See *Installing the Battery* on page 12.

4. Disconnect all electrical loads from the generator.

5. Make sure the circuit breakers are properly set (see Figure 8 below).

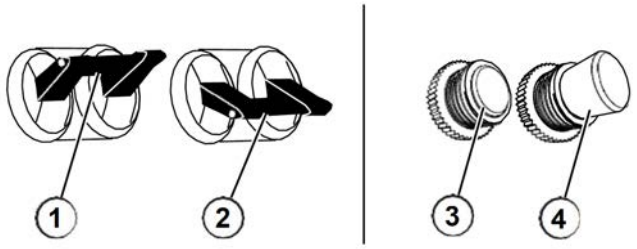

Figure 8 - Breakers

① 240/120VMain Circuit Breaker Operating Position
② 240/120V Main Circuit Breaker Tripped Position
③ 120V Circuit Breaker Operating Position
④ 120V Circuit Breaker Tripped Position

4. Select fuel source for start up:

   FOR GASOLINE:

   a. Move the fuel shut off valve to the **ON** position (see Figure 9).
   b. Turn fuel selector knob to **GASOLINE** (see Figure 9).

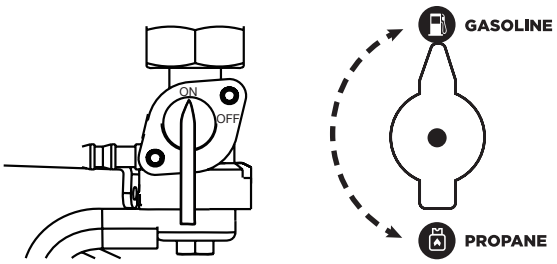

Figure 9 - Fuel Shut Off - ON
Fuel Selector - GASOLINE

   FOR LPG/PROPANE:

   a. Make sure the LPG hose is safely secured from the generator to the tank (see *Connecting the LPG Tank* on page 19).
   b. Turn the fuel selector knob to **PROPANE** (see Figure 10).
   c. Fully open the valve on the propane tank.

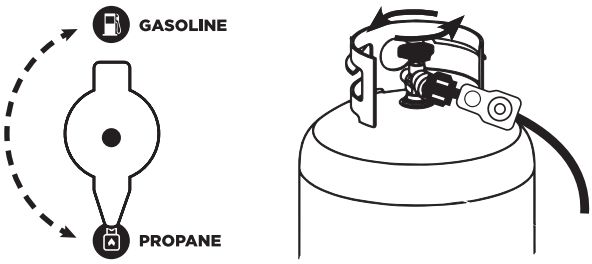

Figure 10 - Fuel Selector - PROPANE
Propane Tank Valve - OPEN

5. Switch the engine switch to **RUN** (see Figure 11).

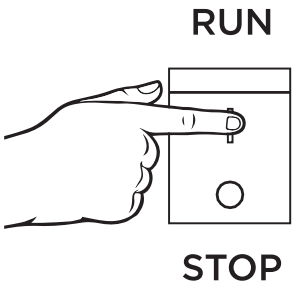

Figure 11 - Engine Switch - RUN

6. Choose starting method:

   a. Recoil Start: Move the choke to the right then firmly grasp and pull the recoil handle slowly until you feel increased resistance. At this point, apply a rapid pull while pulling up and slightly away from the generator.

   b. Remote Start: Click **START** on the wireless key FOB provided.

   c. Push Button Start: Push and hold the engine start push button for 1 second and release.

      - The engine will automatically set the choke and begin the start sequence.
      - If the engine has started successfully the light indicator on the engine start button will turn green.
      - If the engine fails to start, the generator controls will attempt to start the engine two more times for a total of three attempts.
      - If the third attempt fails, the light on the engine start button will turn red.
      - If the engine has failed to start after three attempts the engine start button can be pushed again to begin the automatic start sequence.
      - The red engine stop button can be pushed at any time during the automatic start sequence to abort the engine start attempt.

OPERATION

STOPPING THE GENERATOR

Normal Operation
During normal operation, use the following steps to stop your generator:

1. Remove any connected loads from the control panel receptacles.
2. Allow the generator to run at “no load” to reduce and stabilize engine and alternator temperatures.
3. If you are operating on gas move the fuel shut off valve to **OFF** (see Figure 14). If you are operating on propane shut off the tank valve (see Figure 15). Wait for engine to shut off due to lack of fuel.
4. To stop generator remotely simply push the **STOP** button on the wireless control. The generator will run for an additional 15 seconds as it goes through a cool down cycle before shutting off.
5. Position the engine control switch to **STOP** (see Figure 16).

During an Emergency
If there is an emergency and the generator must be stopped quickly, position the engine control switch to the **STOP** position immediately.

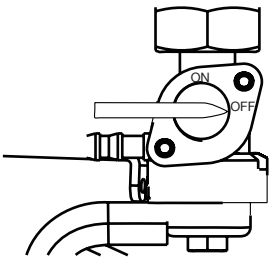

Figure 14 - Fuel Shut Off - OFF

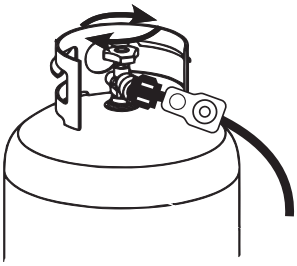

Figure 15 - Propane Tank Valve - CLOSED

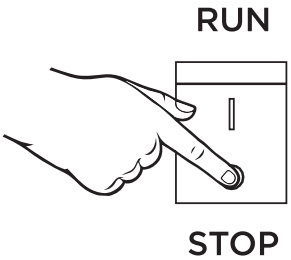

Figure 16 - Engine Switch - STOP

MAINTENANCE

BEFORE PERFORMING MAINTENANCE ON THE GENERATOR, REVIEW THE SAFETY SECTION STARTING ON PAGE 5, AS WELL AS THE FOLLOWING SAFETY MESSAGES.

⚠ WARNING	
	Avoid accidentally starting the generator during maintenance by removing the spark plug boot from the spark plug. For electric start generators, also disconnect the battery cables from the battery (disconnect the black negative (-) cable first) and place the cables away from the battery posts to avoid arcing.
	Allow hot components to cool to the touch prior to performing any maintenance procedure.

⚠ WARNING	
	Internal pressure can build in the engine crankcase while the engine is running. Removing the oil fill plug/ dipstick while the engine is hot can cause extremely hot oil to spray out of the crankcase and can severely burn skin. Allow engine oil to cool for several minutes before removing the oil fill plug/dipstick.
	Always perform maintenance in a well-ventilated area. Gasoline fuel and fuel vapors are extremely flammable and can ignite under certain conditions.

MAINTENANCE

MAINTENANCE SCHEDULE

⚠ WARNING

Failure to perform periodic maintenance or not following maintenance procedures can cause the generator to malfunction and could result in death or serious injury.

NOTICE

Periodic maintenance intervals vary depending on generator operating conditions. Operating the generator under severe conditions, such as sustained high-load, high-temperature, or unusually wet or dusty environments, will require more frequent periodic maintenance. The intervals listed in the maintenance schedule should be treated only as a general guideline.

⚠ CAUTION

Avoid skin contact with engine oil or gasoline. Prolonged skin contact with engine oil or gasoline can be harmful. Frequent and prolonged contact with engine oil may cause skin cancer. Take protective measures and wear protective clothing and equipment. Wash all exposed skin with soap and water.

Following the maintenance schedule is important to keep the generator in good operating condition. The following is a summary of maintenance items by periodic maintenance intervals.

TABLE 1: MAINTENANCE SCHEDULE - OWNER PERFORMED

Maintenance Item	Before Every Use	After First 20 Hours or First Month of Use	After 50 Hours of Use or Every 6 Months	After 100 Hour of Use or Every 6 Months	After 300 Hours of Use or Every Year
Engine Oil	Check Level	Change	Change	-	-
Cooling Features	Check/Clean	-	-	-	-
Air Filter	Check	-	Clean*	-	Replace
Spark Plug	-	-	-	Check/Clean	Replace
Spark Arrestor	-	-	-	Check/Clean	-

*Service more frequently if operating in dry and dusty conditions

TABLE 2: MAINTENANCE SCHEDULE - AUTHORIZED WESTINGHOUSE SERVICE DEALER PERFORMED

Maintenance Item	Before Every Use	After First 20 Hours or First Month of Use	After 50 Hours of Use or Every 6 Months	After 100 Hour of Use or Every 6 Months	After 300 Hours of Use or Every Year
Valve Clearance	-	-	-	-	Check/Adjust
Fuel Filter	-	-	-	Check/Clean	-
Idle Speed	-	-	-	-	Check/Adjust

MAINTENANCE

ENGINE OIL MAINTENANCE

Engine Oil Specification

1. Only use the engine oil specified in Figure 17.
2. Only use 4-stroke/cycle engine oil. **NEVER USE 2-STROKE/CYCLE OIL**. Synthetic oil is an acceptable substitute for conventional oil.

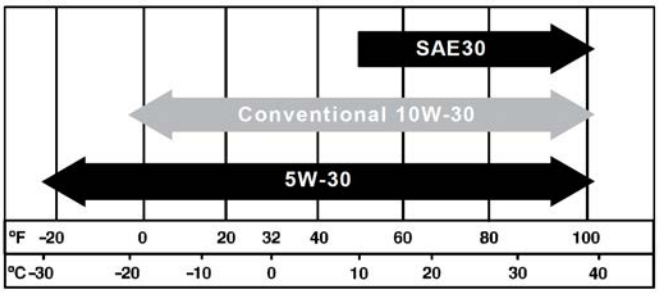

Figure 17 - Recommended Oil

CHECKING ENGINE OIL

NOTICE

Always maintain proper engine oil level. Failure to maintain proper engine oil level could result in severe damage to the engine and/or shorten the life of the engine. Always use the specified engine oil. Failure to use the specified engine oil can cause accelerated wear and/or shorten the life of the engine.

Engine oil level should be checked before every use.

1. Always operate or maintain the generator on a flat surface.
2. Stop engine if running.
3. Let engine sit and cool for several minutes (allow crankcase pressure to equalize).
4. With a damp rag, clean around the oil fill plug/dipstick.
5. Remove oil fill plug/dipstick (see Figure 18 below).

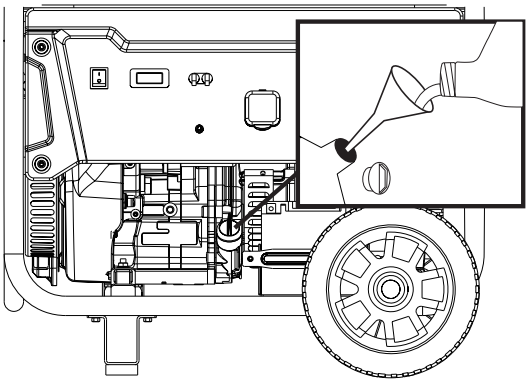

Figure 18 - Oil Fill Plug/Dipstick

6. Check oil level: When checking the engine oil, remove the oil fill plug/dipstick and wipe it clean. Thread the oil fill plug/dipstick all the way back in and then remove and check the oil level on the oil fill plug/dipstick.
   - **Acceptable Oil Level** – Oil is visible on the crosshatches between the H and L lines on the oil fill plug/dipstick (see Figure 19).
   - **Low Oil** – Oil is below the L line on the oil fill plug/ dipstick.

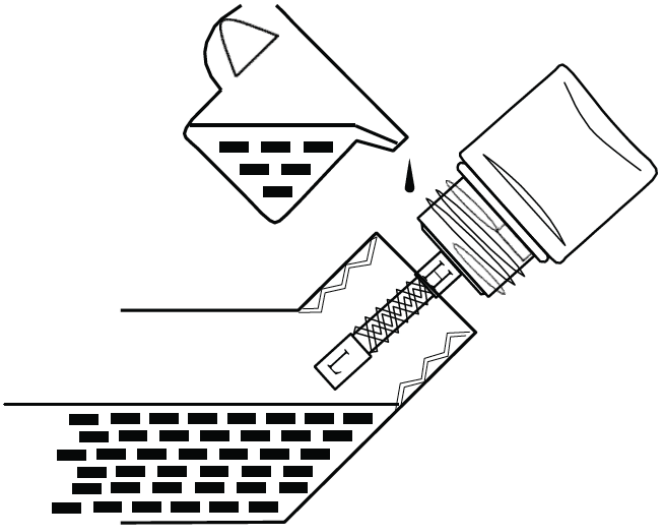

Figure 19 - Checking Oil Level

ADDING ENGINE OIL

1. Always operate or maintain the generator on a flat surface.
2. Stop engine if running.
3. Let engine sit and cool for several minutes (allow crankcase pressure to equalize).
4. Thoroughly clean around the oil fill plug/dipstick.
5. Remove oil fill plug/dipstick and wipe clean.
6. Select the proper engine oil as specified in Figure 17.
7. Using the supplied funnel and tube, slowly add engine oil to the engine. Stop frequently to check the level to avoid overfilling.
8. Continue to add oil until the oil is at the correct level. See Figure 19.

MAINTENANCE

CHANGING ENGINE OIL

1. Stop the engine.
2. Let engine sit and cool for several minutes (allow crankcase pressure to equalize).
3. Place oil pan (or suitable container) under the oil drain plug (see Figure 20).
4. With a damp rag, thoroughly clean around the oil drain plug.
5. Remove the oil drain plug (see Figure 20). Once removed, place the oil drain plug on a clean surface.

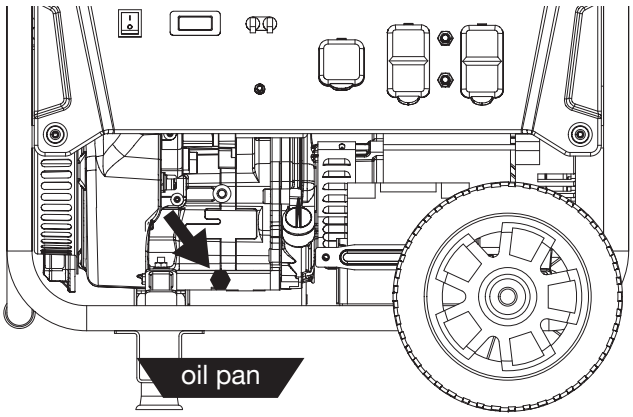

Figure 20 - Oil Drain Plug

6. Allow oil to completely drain.
7. Replace oil drain plug.
8. Fill crankcase with oil following the steps outlined in *Adding Engine Oil* on page 24.

NOTICE

Never dispose of used engine oil by dumping the oil into a sewer, on the ground, or into ground water or waterways. Always be environmentally responsible. Follow the guidelines of the EPA or other governmental agencies for proper disposal of hazardous materials. Consult local authorities or reclamation facility.

AIR FILTER MAINTENANCE

⚠ WARNING

Never use gasoline or other flammable solvents to clean the air filter. Use only household detergent soap to clean the air filter.

Cleaning the Air Filter

The air filter must be cleaned after every 50 hours of use or 3 months (frequency should be increased if generator is operated in a dusty environment).

1. Turn off the generator and let it cool for several minutes if running.
2. Move the generator to a flat, level surface.
3. Unclip the clips on the top and bottom of the air filter cover (Figure 21).

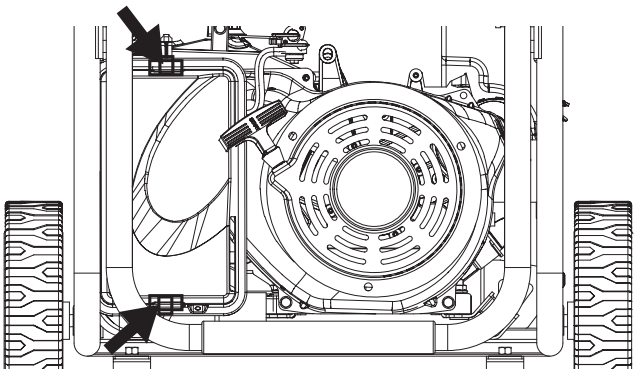

Figure 21 - Clips on air filter

4. Remove the black coarse air filters.
5. Wash the foam air filter elements by submerging the elements in a solution of household detergent soap and warm water. Slowly squeeze the foam to thoroughly clean.

NOTICE

NEVER twist or tear the foam air filter element during cleaning or drying. Only apply slow but firm squeezing action.

6. Rinse in clean water by submerging the air filter elements in fresh water and applying a slow squeezing action

Cleaning the Air Filter - *Continued from Page 25*

NOTICE

Never dispose of soap cleaning solution used to clean the air filter by dumping the solution into a sewer, on the ground, or into ground water or waterways. Always be environmentally responsible. Follow the guidelines of the EPA or other governmental agencies for proper disposal of hazardous materials. Consult local authorities or reclamation facility.

7. Dispose of used soap cleaning solution properly.
8. Dry the air filter elements by again applying a slow firm squeezing action.
9. Once the air filters are dry, coat the air filters with clean engine oil (see Figure 22 below).

Figure 22

10. Squeeze the filters to remove any excess oil.
11. Install the filters back into the unit. If there are two filters make sure the gray (fine) air filter goes in first followed by the black (coarse) air filter on the outside.
12. Install the air filter cover and secure the air filter assembly.

SPARK PLUG MAINTENANCE

The spark plug must be checked and cleaned after every 100 hours of use or 6 months and must be replaced after 300 hours of use or every year.

1. Stop the generator and let it cool for several minutes if running.
2. Move the generator to a flat, level surface.
3. Remove the spark plug boot by firmly pulling the plastic spark plug boot handle directly away from the engine (see Figure 23).

NOTICE

Never apply any side load or move the spark plug laterally when removing the spark plug. Applying a side load or moving the spark plug laterally may crack and damage the spark plug boot.

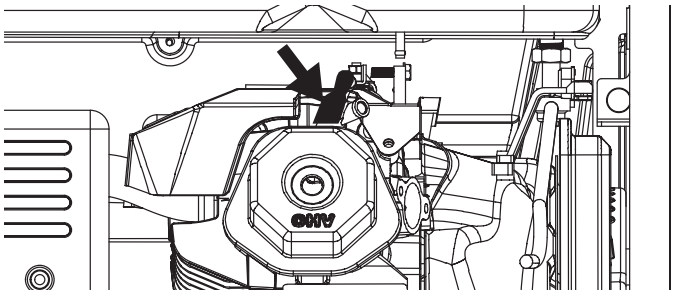

Figure 23 - Remove Spark Plug Boot

4. Clean area around the spark plug.
5. Using the 13/16” spark plug socket wrench provided, remove the spark plug from the cylinder head.
6. Place a clean rag over the opening created by the removal of the spark plug to make sure no dirt can get into the combustion chamber.

   Inspect the spark plug for:
   - Cracked or chipped insulator
   - Excessive wear
   - Spark plug gap (the acceptable limit of 0.027–0.032 in. [0.70 – 0.80 mm]) (see Figure 24).

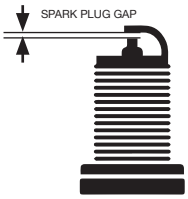

Figure 24

NOTICE

Use only recommended spark plugs when servicing. The manufacturer is not responsible for engine damage when using spark plugs not recommended by the manufacturer.

7. Install the spark plug by carefully following the steps outlined below:
   a. Carefully insert the spark plug back into the cylinder head. Hand-thread the spark plug until it bottoms out.
   b. Using the 13/16” spark plug socket wrench provided, turn the spark plug to ensure it is fully seated.
   c. Replace the spark plug boot, making sure the boot fully engages the spark plug’s tip.

Recommended Spark Plug Replacement:
AC Delco: 4EXLS
Autolite: 52
Champion: N9YC
Bosch: W7DC
Torch: F7TC

MAINTENANCE

CHECKING AND ADJUSTING VALVE LASH

⚠ CAUTION

Checking and adjusting valve lash must be done when the engine is cold.

1. Remove the rocker arm cover and carefully remove the gasket. If the gasket is torn or damaged, it must be replaced.
2. Remove the spark plug so the engine can be rotated more easily.
3. Rotate the engine to top dead center (TDC) of the compression stroke. Looking through the spark plug hole, the piston should be at the top.
4. Both the rocker arms should be loose at TDC on the compression stroke. If they are not, rotate the engine 360°.
5. Insert a feeler gauge between the rocker arm and the push rod and check for clearance (see Figure 25). See Table 2 for valve lash specifications

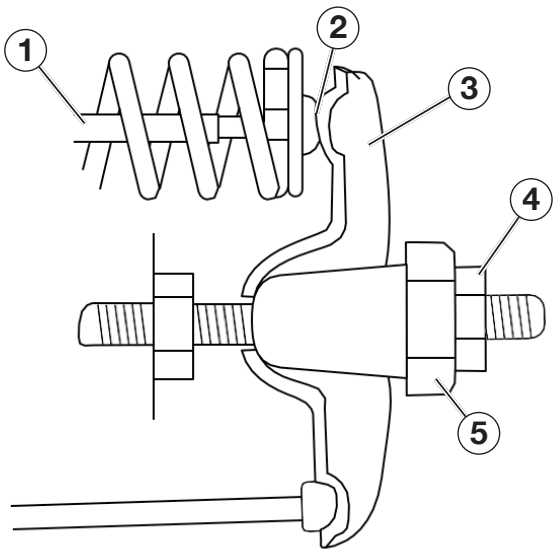

Figure 25
(1) Push Rod, (2) Feeler Gauge Area
(3) Rocker Arm, (4) Jam Nut, (5) Adjusting Nut

(Table 2) Standard Valve Lash

	Intake Valve	Exhaust Valve
Valve Lash	0.0035 ± 0.0043 in (0.09 ± 0.11 mm)	0.0043 ± 0.0051 in (0.11 ± 0.13 mm)
Bolt Torque	8-12N.m	8-12N.m

6. If an adjustment is required, hold the adjusting nut and loosen the jam nut.
7. Turn the adjusting nut to obtain the correct valve lash. When the valve lash is correct, hold the adjusting nut and tighten the jam nut to 106 in-lb (12 N•m).
8. Recheck the valve lash after tightening the jam nut.
9. Perform this procedure for both the intake and exhaust valves.
10. Install the rocker arm cover, gasket and spark plug.

BATTERY SERVICE

To ensure the battery remains charged, the generator should be started every 2 to 3 months and run for a minimum of 15 minutes or the charger (included) should be plugged into the generator and the generator should be charged overnight. Make sure the engine control switch is in the “RUN” position when charging. Plug the cord from the charger into the charging port on the generator. Plug the charger into a 110/120-volt AC outlet.

CLEANING THE GENERATOR

It is important to inspect and clean the generator before every use.

Clean All Engine Air Inlet and Outlet Ports – Make sure all engine air inlet and outlet ports are clean of any dirt and debris to ensure the engine does not run hot.

Clean All Engine Cooling Fins – Use a damp rag and a brush to loosen and remove all dirt on or around the engine’s cooling fins.

Clean All Alternator Cooling Air Inlets and Exhaust Ports – Make sure the cooling air inlets and exhaust ports of the alternator are free of any debris and obstructions. Use a vacuum cleaner to remove dirt and debris stuck in the cooling air inlets and exhaust ports.

General Cleaning of the Generator – Use a damp rag to clean all remaining surfaces.

STORING GENERATOR

⚠ WARNING

Never store a generator with fuel in the tank indoors or in a poorly ventilated area where the fumes can come in contact with an ignition source such as a: 1) pilot light of a stove, water heater, clothes dryer or any other gas appliance; or 2) spark from an electric appliance.

NOTICE

Gasoline stored for as little as 60 days can go bad, causing gum, varnish and corrosive buildup in fuel lines, fuel passages and the engine. This corrosive buildup restricts the flow of fuel, preventing an engine from starting after a prolonged storage period.

Proper care should be taken to prepare the generator for any storage.

MAINTENANCE

Storing Generator - Continued from page 27

1. Make sure the Engine Switch is switched to **STOP** so the generator does not draw power from battery.
2. Clean the generator as outlined in *Cleaning the Generator*.
3. Drain all gasoline from the fuel tank as best as possible.
4. With the fuel shut off valve open, start the engine and allow the generator to run until all the remaining gasoline in the fuel lines and carburetor is consumed and the engine shuts off. If you used propane the last time you ran the generator: start the unit up with propane then shut off the propane tank valve allowing the engine to use up all the remanding propane in the carburetor before it shuts off.
5. Close the fuel shut off valve.
6. Change the oil (see Changing Engine Oil on page 25).
7. Remove the spark plug (see Spark Plug Maintenance on page 26) and place about 1 tablespoon of oil in the spark plug opening. While placing a clean rag over the spark plug opening, slowly pull there coil handle to allow the engine to turn over several times. This will distribute the oil and protect the cylinder wall from corroding during storage.
8. Replace the spark plug (see Spark Plug Maintenance on page 26).
9. Move the generator to a clean, dry place for storage.

TROUBLESHOOTING

⚠ WARNING

Before attempting to service or troubleshoot the generator, the owner or service technician must first read the owner's manual and understand and follow all safety instructions. Failure to follow all instructions may result in conditions that can lead to voiding of the EPA certification or product warranty, serious personal injury, property damage or even death.

PROBLEM	POTENTIAL CAUSE	SOLUTION
Engine is running, but no electrical output	1. Circuit breakers are tripped.	1. Reset the circuit breakers and check for overload condition.
	2. The power cord's plug connector is not fully engaged in the generator's outlet.	2. Verify plug connector is firmly engaged in the generator's outlet.
	3. Faulty or defective power cord	3. Replace power cord.
	4. Faulty or defective electrical appliance	4. Try connecting a known good appliance to verify the generator is producing electrical power.
	5. If trying 1-4 above does not solve the problem, the cause might be the generator has a fault.	6. Take the generator to your nearest authorized service dealer.
Engine runs erratic; does not hold a steady RPM.	1. Dirty air filter	1. Clean the air filter (see pages 25-26).
	2. Applied loads maybe cycling on and off	2. As applied loads cycle, changes in engine speed may occur; this is a normal condition.
	3. If trying 1-2 above does not solve the problem, the cause might be a fault in the generator	3. Take the generator to your nearest authorized service dealer.
Generator suddenly stops running.	1. Generator is out of fuel.	1. Check fuel level. Add fuel if necessary.
	2. The low oil shut down switch has stopped the engine.	2. Check oil level and add oil if necessary (see page 24).
	3. Too much load	3. Restart the generator and reduce the load.
	4. If trying 1-3 above does not solve the problem,the cause might be a fault in the generator.	4. Take the generator to your nearest authorized service dealer.

TROUBLESHOOTING

Engine will not start or remain running while trying to start.	1. Fuel shutoff valve is in the OFF position.	1. Move the fuel shut off valve to the ON position (see Figure 9 page 21).
	2. Generator is out of gasoline.	2. Add gasoline to the generator (see page 19).
	3. Fuel flow is obstructed.	3. Inspect and clean fuel delivery passages.
	4. Starting battery may have insufficient charge	4. On electric start models only. Check battery output and charge battery as necessary.
	5. Dirty air filter	5. Check and clean the air filter (see page 25).
	6. Low oil level shut down switch is preventing the unit from starting.	6. Check oil level and add oil if necessary (see page 24).
	7. Spark plug boot is not fully engaged with the spark plug tip.	7. Firmly push down on the spark plug boot to ensure the boot is fully engaged
	8. Spark plug is faulty.	8. Remove and check the spark plug. Replace if faulty (see page 26).
	9. Dirty/plugged spark arrestor	9. Check and clean the spark arrestor.
	10. Stale fuel	10. Drain fuel and replace with fresh fuel.
	11. If trying 1-10 above does not solve the problem, the cause might be the generator has a fault.	11. Take the generator to your nearest authorized service dealer.

Frost on the propane tank or regulator	1. This can be a normal occurrence caused when liquid propane changes phase to a gas. As this process occurs the fuel tank or regulator will cool and allow humid air surrounding the propane tank or regulator to condense into frost.	1. As this can be normal, providing all the propane fuel handling equipment is functioning normally, no remedy is needed.
	2. The propane tank is not equipped with a OPD (rollover protection device) and has been stored in a horizontal position allowing liquid propane to enter the downstream fuel handling equipment.	2. If you suspect your propane fuel tank is not equipped with a OPD device, discontinue operation immediately and replace the propane fuel tank with a propane tank equipped with a roll over protection device.
	3. Propane fuel tank over filled.	3. If you suspect your propane fuel tank has been overfilled, discontinue operation immediately and return the propane fuel tank to the place of purchase or refilling.

Propane fuel smell	1. Fuel regulator or fuel hose and fittings not securely sealed.	1. Using a soap solution check each connection and tighten as needed.
	2. Propane fuel regulator vent active.	2. The propane fuel regulator is equipped with a small vent that will allow a small amount of propane fuel vapor to escape from the regulator when the propane tank valve is opened. This can be normal providing the venting of the propane is brief. If you suspect that this is abnormal, immediately discontinue use and have the propane regulator inspected by a qualified technician.
	3. Residual fuel from the carburetor dispersing after operation.	3. Normal, no remedy is needed.

Poor performance or engine stalling on propane	1. Propane fuel line kinked or crushed.	1. Inspect propane fuel line and remove kinks or other obstructions.
	2. Fuel selector valve not properly positioned.	2. Rotate the fuel valve fully until the pointer is directly in line with the desired fuel.
	3. Gasoline not purged from the carburetor before switching to propane.	3. Turn the propane fuel tank valve to closed. Move the fuel selector valve to propane. Turn the gasoline fuel valve to off. Start the engine and allow the engine to run until the fuel has been consumed in the carburetor. Begin propane start up procedure.

WGen3600DF EXPLODED VIEW

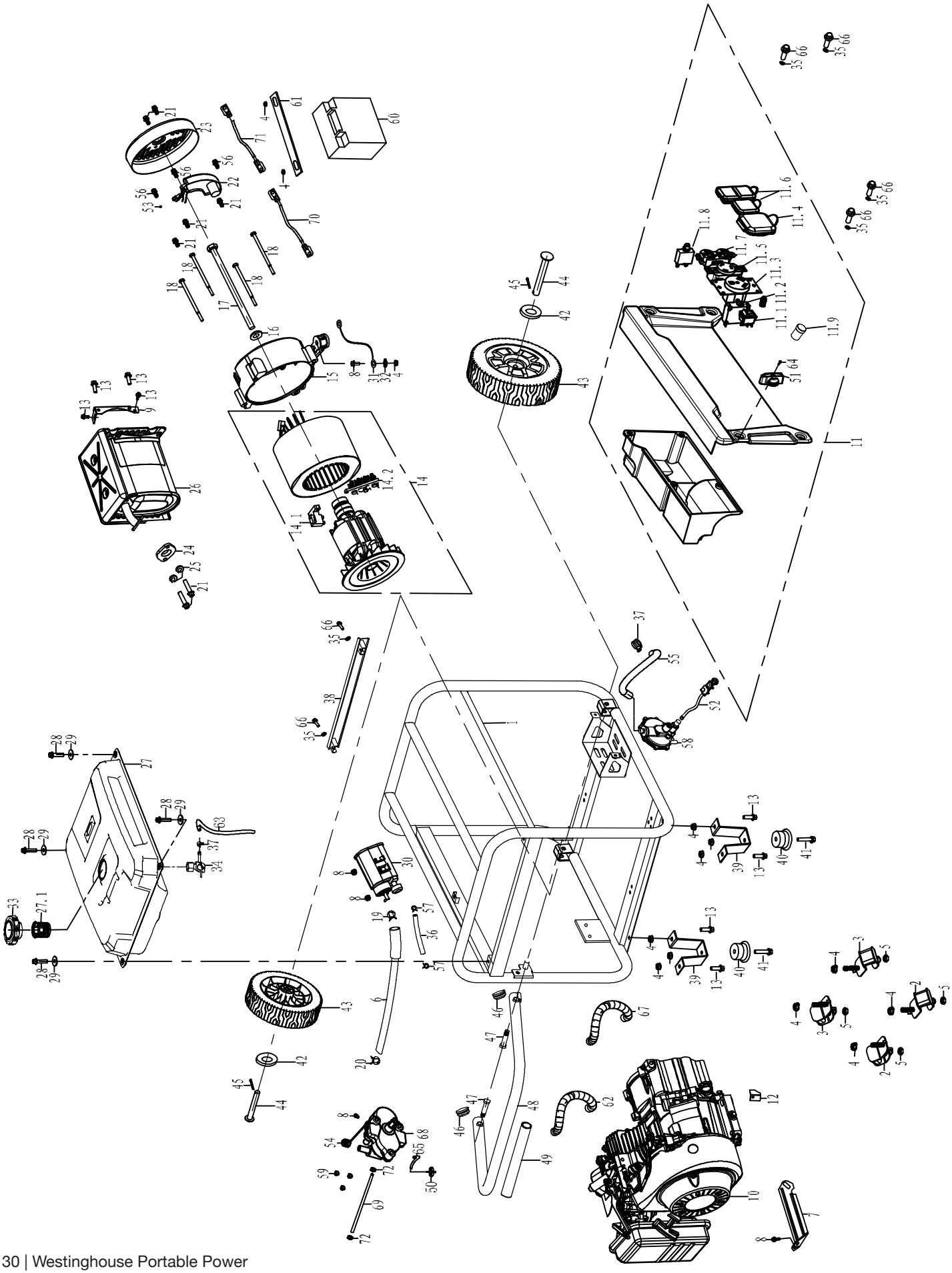

WGen3600DF EXPLODED PART NO.

No.	Part.	Description
1	100608	Frame
2	105560	Damper
3	100559	Damper
4	100520	M8 Nut
5	180524	M8 Nut
6	150519	Hose
7	180569	Bracket
8	120539	M6X12
9	110520	Bracket
10	180595	Engine Assy
11	130554	Panel Complete
11.1	130534	Stop Switch
11.2	130547	GFCI Breaker 1P30A
11.3	130511	TT-30 Receptacle
11.4	130555	TT-30R Dust Cover
11.5	130550	L5-30 Receptacle
11.6	130512	R5-20 Receptacle
11.7	130549	Dust Cover TT-30R
11.8	130533	Circuit Breaker 1P20A
11.9	130528	Start Switch
12	180568	Dust Plate
13	100516	M8X16
14	120546	Alternator Assy
14.1	120525	Brush Assy
14.2	120526	Terminal Block
15	120527	Rear Bearing Carrier
16	120532	Washer
17	120531	M8X220
18	120521	M6X165
19	150545	Hose Clamp
20	150550	Hose Clamp
21	120537	M5X12
22	120529	AVR
23	120545	Alternator Cover
24	110519	Gasket
25	110502	Spring Washer
26	110518	Muffler Assy
27	150551	Fuel Tank
27.1	150506	Fuel Strainer
28	120541	M5X25
29	150547	M6 Washer
30	150520	Carbon Canister
31	120528	Ground Strap
32	120533	M6 Washer
33	150505	Fuel Tank Cap
34	150552	Fuel Valve
35	100547	Washer
36	150522	Hose
37	150553	Hose Clamp
38	100530	Bracket
39	100541	Foot Bracket
40	100515	Rubber Pad
41	100582	M6X28
42	100510	Washer
43	100538	Wheel
44	100537	Axle Pin
45	100508	Cotter Pin
46	100546	Plug
47	100545	Handle Fastener
48	100543	Handle
49	100544	Handle Cover
50	100593	Fuel Filter
51	130539	Fuel Selector Knob
52	100594	High Pressure Regulator
53	120512	M5 Lock Washer
54	100595	Regulator Cap
55	100610	Fuel Hose
56	120518	M5X16
57	150549	Hose Clamp
58	100603	Fuel Regulator
59	100583	M5 Nut
60	100579	Battery
61	110524	Battery Hold Down
62	100607	Conduit
63	100611	Fuel Hose
64	130535	Allen Head Bolt
65	150554	Fuel Hose
66	130536	M6X16
67	100612	Conduit
68	130538	Fuel Selector Valve
69	100610	Fuel Hose
70	100584	Positive Lead
71	100613	Negative Lead
72	100588	Hose Clamp

WGen3600DF ENGINE VIEW

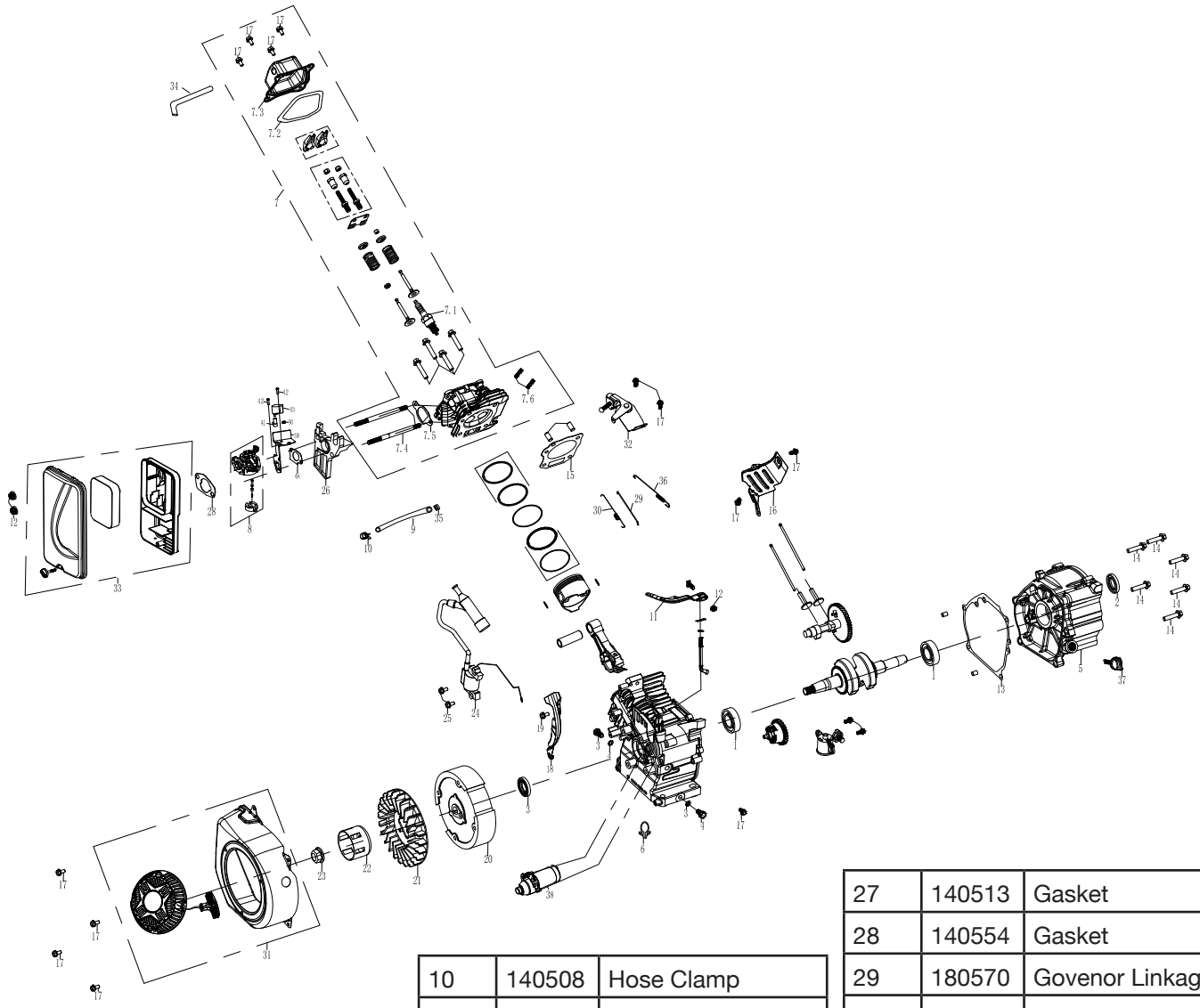

No.	Part.	Description
1	180556	Ball Bearing
2	180541	Oil Seal
3	180543	Drain Plug
4	180544	Drain Plug Seal
5	180546	Crankcase Cover
6	170518	Harness Clamp
7	180596	Cylider Head Assy
7.1	180526	Spark Plug
7.2	180555	Valve Cover Gasket
7.3	180554	Valve Cover
7.4	140515	M6 Stud
7.5	140516	Gasket
7.6	180571	M10X80 Stud
8	140552	Carburetor Assy
9	140553	Fuel Hose
10	140508	Hose Clamp
11	180549	Govenor Arm
12	100548	M6 Nut
13	180545	Gasket
14	110503	M8X30
15	180547	Cylinder Head Gasket
16	180553	Heat Shield
17	120505	M6X12
18	180597	Dust Plate
19	180567	M6X20
20	180598	Flywheel Assy
21	180539	Engine Cooling Fan
22	180538	Starter Cup
23	180537	Crankshaft Nut
24	180599	Ignition Coil Assy
25	100518	M6X25
26	140514	Spacer
27	140513	Gasket
28	140554	Gasket
29	180570	Govenor Linkage
30	180551	Throttle Return Spring
31	170519	Recoil Assy
32	180552	Govenor Bracket
33	160501	Air Cleaner Assy
34	180559	Vent
35	140506	Fitting
36	180550	Govenor Spring
37	180600	Dip Stick
38	170520	Engine Starter
39	140555	Stepper Motor Bracket
40	140556	Spring
41	140557	Stepper Motor Coupling Shaft
42	140558	Stepper Motor Fastener
43	140559	Stepper Motor

WGen3600DF SCHEMATIC

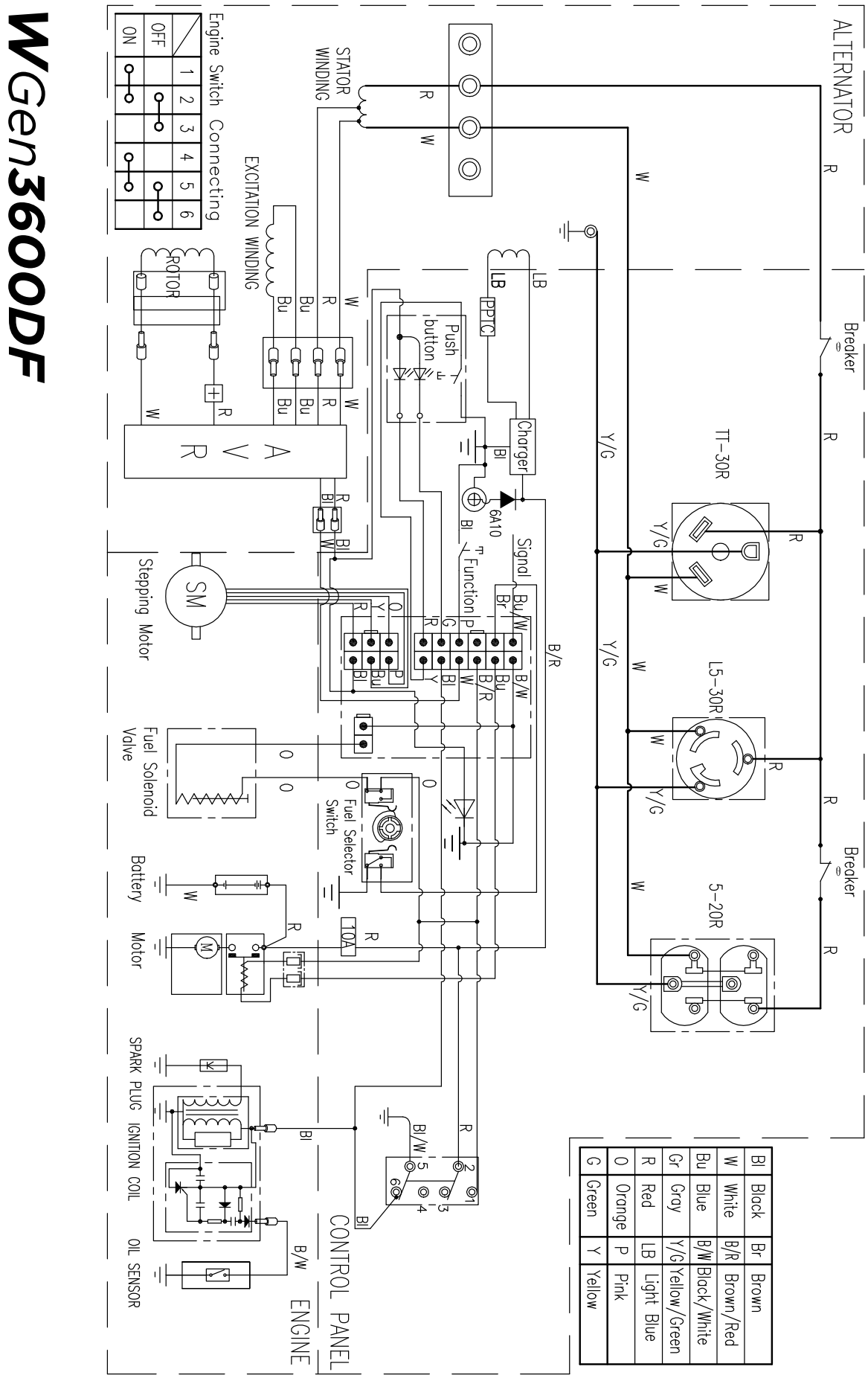

MAINTENANCE NOTES

MAINTENANCE NOTES

WestinghousePortablePower.com

Service Hotline: (855) 944-3571

777 Manor Park Drive
Columbus, OH 43228

™ & © 2016 Westinghouse Electric Corporation
© 2016 MWE Investments, LLC. All Rights Reserved.

Version 9.25.17KD