HOSE REELS BUILT TOUGH...
...BUILT AFFORDABLE!

Steel Eagle

Tough Standard Features

Steel Eagle's heavy-duty features perform for any application, with any equipment!

All Reels:

- Nyrim ends
- Pressure rated to 4000 PSI
- Friction brakes
- Lock pin
- Pre-drilled mounting holes
- Heavy-duty swivel
- Maximum 325° F swivel temperature
- Easy-turn handle

Stainless Reels:

- Total non-corrosive Reel

Black Painted Reels:

- Dura-gloss paint, powder- coated
- Schedule 80 spindle pipe

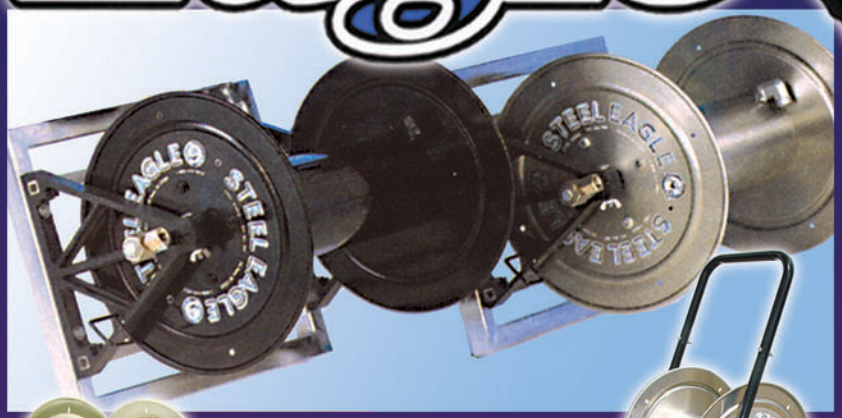

REEL STACK KIT

8" - Part #K01-0149
12" - Part #K01-0150
18" - Part #K01-0151
22" - Part #K01-0152

NOTE: Reels sold separately.

REEL CART KIT

Part #K01-0160

NOTE: 12" Reel sold separately.

Applications

- Portable Compressors
- Power Washers • Steam Cleaning
- Industrial Plants • Roofing Contractors
- Hotels, Motels, Resorts & Restaurants
- Agricultural Fertilizers & Herbicides
- Lawn Care/Grounds Maintenance
- Orchards/Tree Spraying
- Nurseries/Greenhouses
- Pest Control/Pesticides

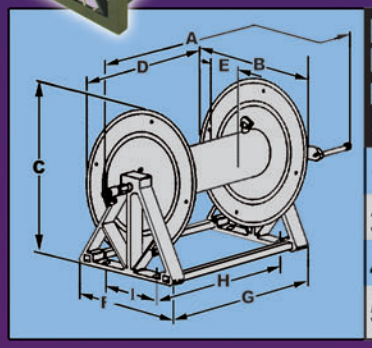

HOSE CAPACITY IN FEET HOSE SIZE (I.D.)				ALL DIMENSIONS IN INCHES									APPROX. WT. LBS.	
3/8"	1/2"	SIZE	MODEL #	"A"	"B"	"C"	"D"	"E"	"F"	"G"	"H"	"I"	NET	SHIP
160'	100'	8"	K01-0105	20 1/2	16 1/2	18 1/2	7 1/2	6	12 1/2	11 1/2	9 7/8	7 1/2	19	25
300'	200'	12"	K01-0106	25 3/4	16 1/2	18 1/2	12	6	12 1/2	16	14 3/8	7 1/2	21	27
450'	325'	18"	K01-0107	31 3/4	16 1/2	18 1/2	18	6	12 1/2	22	20 3/8	7 1/2	25	31
550'	400'	22"	K01-0108	35 3/4	16 1/2	18 1/2	22	6	12 1/2	26	24 3/8	7 1/2	27	33

SWIVEL REELS

Swivel Reel • Reel swivels 200° to give optimum travel range for hose.

Adjustable Friction Brakes • Eliminates hose backlash when unwinding.

Heavy-Duty Performance • Swivel & plumbing rated to 4000 PSI and 250° standard. Optional swivel available for higher temperature ratings.

Easy Push/Pull Lock Pin • Prevents unwanted reel rotation when reel is not in use.

Smooth-Radius Bent Arm • Eliminates 90° bend and strengthens arm.

Locking Collar Shaft • Holds reel in place.

Durable Construction • Heavy-gauge cold-rolled metals manufacture a durable reel, capable of securely storing 150′ of 3/8″ high-pressure hose. *Durable powder-coated paint.*

Hose Holder • Provides the option of coupling the hose to the reel to keep it securely attached.

Double-Bearing Design with Stainless Steel Shaft • Eliminates any side movement and allows reel to turn very easily.

Hair-Pin Clip • Holds reel in place in different positions.

Easy-Mount Adapter •→ Easily adapts to any round or square tubing for mounting in minutes.

← #K01-0300 • Swivel Reel
•Capacity 150 feet 3/8″ hose
•4000 PSI — 250°

#K01-2026 • Mini Swivel Reel with Mounting Block Kit →
•Capacity 100 feet 3/8″ hose
•4000 PSI — 250°

#K01-2025 • Mini Swivel Reel →
•Capacity 100 feet 3/8″ hose
•4000 PSI — 250°

← #K01-0302 • Swivel Reel with Wall Mount
•Capacity 150 feet 3/8″ hose
•4000 PSI — 250

← #K01-0301 • Swivel Reel with Mounting Block Kit
•Capacity 150 feet 3/8″ hose
•4000 PSI — 250°

#K01-0303 • Swivel Reel with Flat-Surface Mount →
•Capacity 150 feet 3/8″ hose
•4000 PSI — 250°

NON-SWIVEL REELS

#K01-1000 • Mini Reel →
•Capacity 100 feet 3/8″ hose
•4000 PSI — 250°

#K01-1026 • Mini Reel with Vertical Arm Mount →
•Capacity 100 feet 3/8″ hose
•4000 PSI — 250°

#K01-1025 • Mini Reel with Vertical Arm Mount and Mounting Block Kit →
•Capacity 100 feet 3/8″ hose
•4000 PSI — 250°

#K01-1010 • Mini Reel with Hand Carry Kit →
NOTE: Mini Reel #K01-1000 sold separately.

← #B01-3061
Mounts reels to AaLadin 1300 & 1400 series machines

STEEL EAGLE HOSE REELS:

HIGH-PRESSURE MOTORIZED REELS

Tough Standard Features

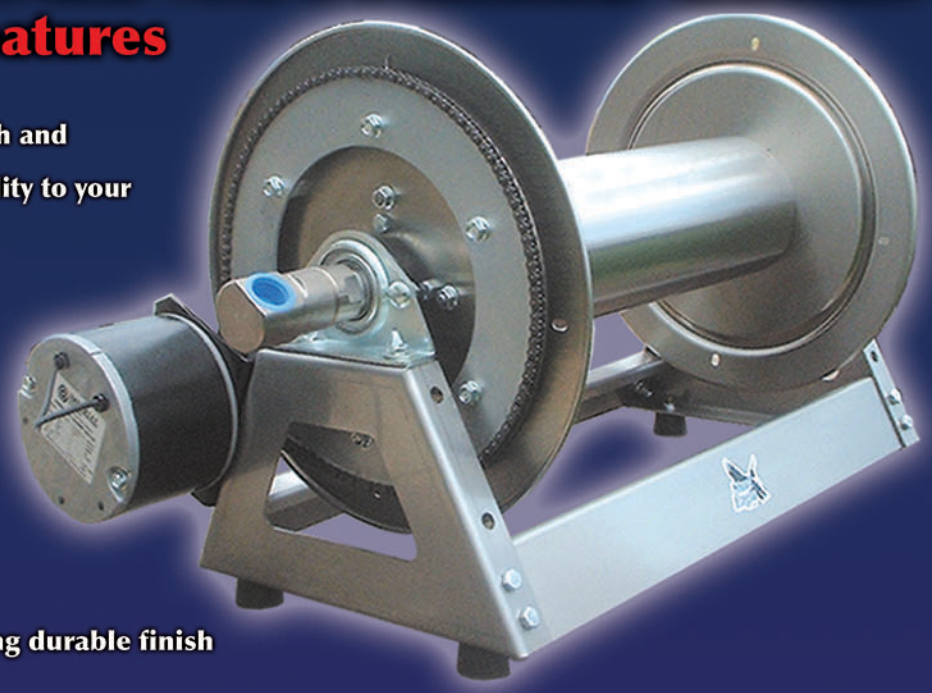

All Reels:
- Solid cross-bow stabilizers add strength and durability to your reel
- Reversible water inlet for easy adaptability to your equipment
- Pressure-rated at 4000 PSI
- Heavy-duty construction
- Durable sealed ball bearings
- Heavy-duty swivel with 325° rating
- 1/2″ swivel and plumbing
- 12 VDC

Stainless Reels:
- Total non-corrosive reel
- Long-lasting polished finish

Painted Reels:
- Durable powder-coated, high-gloss automotive-quality painted finish
- Painting before assembly allows for complete coverage and a longer-lasting durable finish

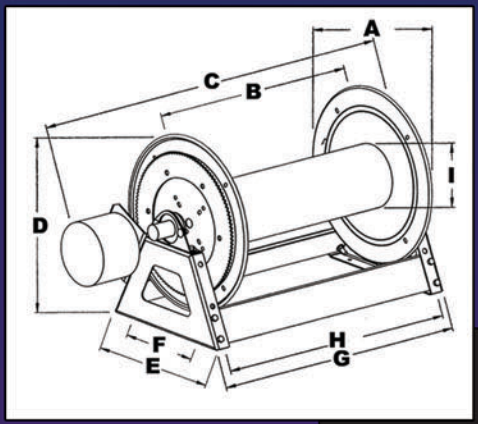

•Custom designs available
•18-month warranty
•24-Volt and 120-Volt options available upon request

	DIMENSIONS									Hose Size/ Capacity in Ft.	
MODEL#	A	B	C	D	E	F	G	H	I	3/8"	1/2"
P18-8E	16½"	8"	22¼"	18½"	14"	10"	13¾"	12"	6"	160'	100'
P18-12E	16½"	12"	26¼"	18½"	14"	10"	17¾"	16"	6"	300'	200'
P18-18E	16½"	18"	32¼"	18½"	14"	10"	23¾"	22"	6"	450'	325'
P18-22E	16½"	22"	36¼"	18½"	14"	10"	27¾"	26"	6"	550'	400'
S18-8E	16½"	8"	22¼"	18½"	14"	10"	13¾"	12"	6"	160'	100'
S18-12E	16½"	12"	26¼"	18½"	14"	10"	17¾"	16"	6"	300'	200'
S18-18E	16½"	18"	32¼"	18½"	14"	10"	23¾"	22"	6"	450'	325'
S18-22E	16½"	22"	36¼"	18½"	14"	10"	27¾"	26"	6"	550'	400'

S - Stainless Steel
E - Electric Rewind (optional)

P - Painted
H - Manual Hand Rewind

Motor Locations:
Standard - Right Rear

Other options available upon request.

BUILT TOUGH ... BUILT AFFORDABLE!

FIRE SERVICE BOOSTER REELS

BUILT TOUGH . . . BUILT AFFORDABLE!

Model #P23-22E (Shown with optional Rubber Mount and Guide Roller)

Tough Standard Features

All Reels:

- Solid cross-bow stabilizers add strength and durability to your reel
- Reversible water inlet for easy adaptability to your equipment
- Pressure-rated at 1000 PSI
- Heavy-duty construction
- Durable sealed ball bearings
- Heavy-duty swivel with 200° rating
- Custom designs available
- 18-month warranty

Stainless Reels:

- Total non-corrosive reel
- Long-lasting polished finish

Painted Reels:

- Durable powder-coated, high-gloss automotive-quality painted finish
- Painting before assembly allows for complete coverage and a longer-lasting durable finish

	DIMENSIONS										
MODEL#	A	B	C	D	E	F	G	H	I	1"	3/4"
P23-22E	23"	22 1/4"	36"	23 3/4"	19"	16"	29"	27"	10 3/4"	200'	300'
S23-22E	23"	22 1/4"	36"	23 3/4"	19"	16"	29"	27"	10 3/4"	200'	300'
P23-16E	23"	16 1/4"	27 3/4"	23 3/4"	19"	16"	23"	21"	10 3/4"	100'	200'
S23-16E	23"	16 1/4"	27 3/4"	23 3/4"	19"	16"	23"	21"	10 3/4"	100'	200'
P18-22E	16 1/2"	22 1/4"	32"	18 1/2"	14"	10"	27 1/2"	25 3/4"	6 1/4"	100'	200'
S18-22E	16 1/2"	22 1/4"	32"	18 1/2"	14"	10"	27 1/2"	25 3/4"	6 1/4"	100'	200'
P18-16E	16 1/2"	16 1/4"	26"	18 1/2"	14"	10"	21 1/2"	19 3/4"	6 1/4"	50'	100'
S18-16E	16 1/2"	16 1/4"	26"	18 1/2"	14"	10"	21 1/2"	19 3/4"	6 1/4"	50'	100'
P18-10E	16 1/2"	10 1/4"	20"	18 1/2"	14"	10"	15 1/2"	13 3/4"	6 1/4"	25'	50'
S18-10E	16 1/2"	10 1/4"	20"	18 1/2"	14"	10"	15 1/2"	13 3/4"	6 1/4"	25'	50'

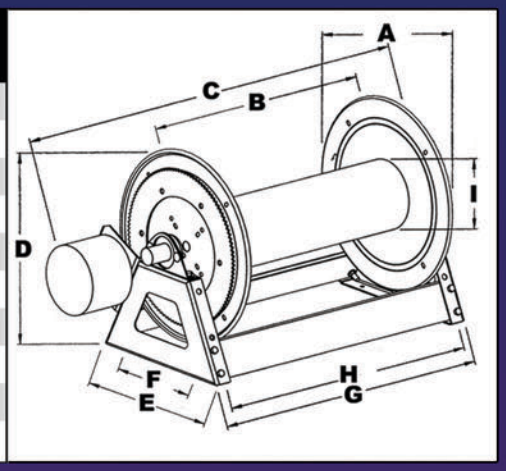

S - Stainless Steel
E - Electric Rewind
Motor Locations:
Standard - Left Rear

P - Painted
H - Manual Hand Rewind (optional)

Other options available upon request.

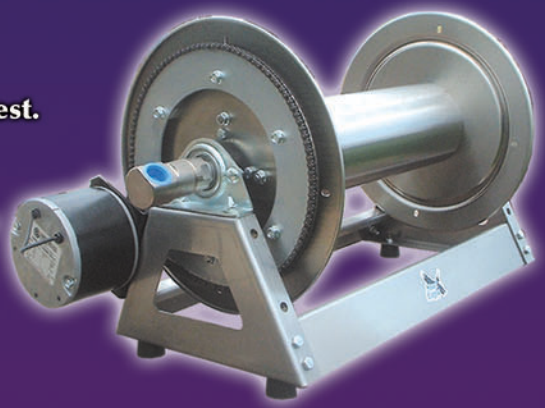

Model #S18-22E

Model #S18-8EC
(Electric Cord Reels Available – Call for details!)

Steel Eagle

1-800-447-3924 • www.steeleagle.com
P. O. Box 919, Elk Point, SD 57025 • Fax 605/356-2144