QOF-2/3/5/7.5

Direct Drive Oil-free scroll compressors

Parts Manual

This manual contains important safety information and should be made available to all personnel who operate and/or maintain this product. Carefully read this manual before attempting to operate or perform maintenance on this equipment.

Manual No. 2930714010

November 2014 Edition

Table of Contents

1 SERVICE KITS 4-5

2 DRIVE ARRANGEMENT - QOF 2 6-7

3 DRIVE ARRANGEMENT - QOF 3 8-9

4 DRIVE ARRANGEMENT - QOF 5 10-11

5 DRIVE ARRANGEMENT - QOF 7.5 12-13

6 AIR SYSTEM - AIR OUTLET - PACK - FLOOR MOUNTED 14-15

7 AIR SYSTEM - AIR OUTLET - W/DRYER - FLOOR MOUNTED 16-19

8 AIR DRYER - ID11 20-21

9 CUBICLE - IEC 22-35

10 CUBICLE - UL-CUL 36-49

11 BODYWORK - PACK 50-51

12 BODYWORK - W/DRYER 52-53

13 STANDARD OPTION - 270L AIR RECEIVER - PACK 54-55

14 STANDARD OPTION - 270L AIR RECEIVER - W/DRYER 56-57

NOTE 58-58

Item No.	Qty.	Part Number		Description	Remarks
	1	**2901 0014 50**		**CHECK VALVE KIT**	
	1	2236 0509 00	•	PISTON	
	1	0663 2108 05	•	O-RING	
	1	0663 2112 13	•	O-RING	
	1			**ELECTRONIC DRAIN VALVE KIT**	
		2200 9020 17		QOF T-VERSIONS	
	1	**2892 6100 20**		**GREASE CARTRIDGE**	
				OUTLET PIPE SET	
		2901 1397 00		QOF 2, QOF 3, QOF 5	
	1			**TIP SEAL - DUST SEAL KIT**	
		2901 1584 00		QOF 2, QOF 3	
		2901 1584 01		QOF 5 - 8BAR(E), 116PSIG	
		2901 1584 02		QOF 5 - 10BAR(E), 145PSIG	
		2901 1977 00		QOF 7.5	
	1			**SERVICE STAGE EXCHANGE KIT**	
		2902 0222 06		QOF 2, QOF 3	
		2902 0222 07		QOF 5 - 8BAR(E), 116PSIG	
		2902 0222 08		QOF 5 - 10BAR(E), 145PSIG	
		2902 0222 04		QOF 7.5 - 8BAR(E), 116PSIG	
		2902 0222 05		QOF 7.5 - 10BAR(E), 145PSIG	

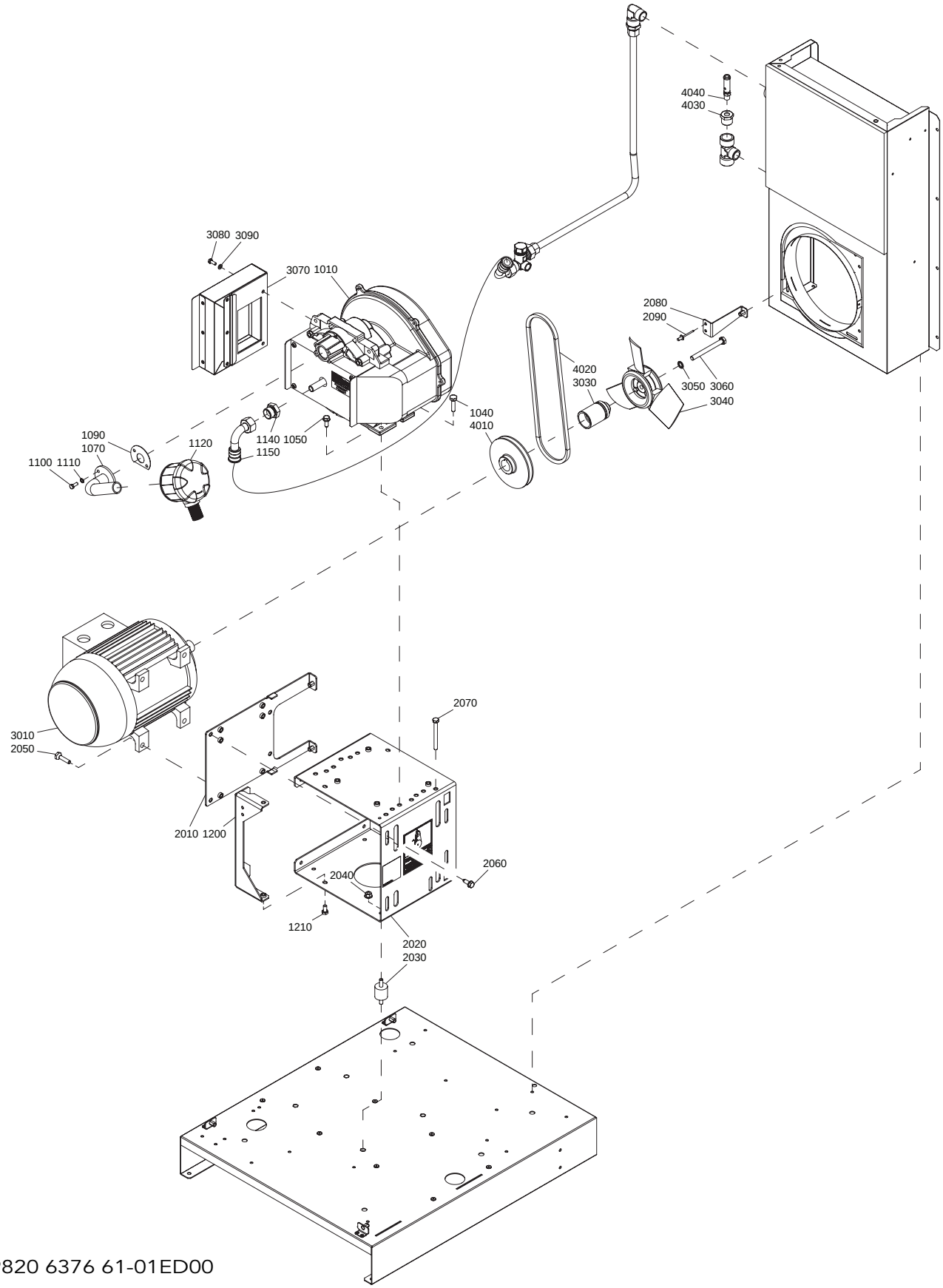

9820 6376 61-01ED00

Item No.	Qty.	Part Number		Description	Remarks
1010	1	2236 0500 00		AIR END	
1040	2	2203 0631 00		SCREW	
1050	2	0147 1963 08		HEXAGON BOLT	
1070	1	2236 0800 00		PIPE	
1090	1	2236 0096 00		SEAL INLET PIPE	
1100	2	0147 1246 03		HEX.BOLT	
1110	2	0333 3220 00		LOCK WASHER	
1120	**1**	**2236 0025 00**		**AIR FILTER**	
	1	1622 0658 00	•	FILTER ELEMENT	
1140	1	2203 0433 00		NIPPLE	
1150	1	2203 0366 02		HOSE	
1200	2	2203 0518 00		BRACKET	
1210	8	0147 1322 03		HEX.BOLT	
2010	1	2202 9741 00		MOTOR PLATE	
2020	**1**	**2203 0193 80**		**SUPPORT**	
	1	2203 0677 00	•	DECAL - BELT TENSIONING	
	1	1079 9902 69	•	DECAL - HOT SURFACE	
2030	4	0392 1100 15		VIBRATION DAMPER	
2040	4	0291 1185 30		LOCK NUT	
2050	4	2203 0631 00		SOCKET SCREW	
2060	4	0147 1963 08		HEXAGON BOLT	
2070	1	0147 1336 12		HEXAGON BOLT	
2080	1	2203 0374 00		STIRRUP	
2090	2	0129 3270 38		RIVET	
3010	1			MOTOR	
		2203 0521 01		QOF 2 230V/50HZ 1PH IEC	
		2203 0521 02		QOF 2 230V/60HZ 1PH IEC - UL/CUL	
3030	1	2203 0469 00		SPACER	
3040	1	2202 9749 03		FAN	
3050	1	0333 4232 00		WASHER	
3060	1	0147 1377 03		HEXAGON BOLT	
3070	**1**	**2203 0473 80**		**EXHAUST BOX**	
	1	2203 0520 00	•	SEAL	
3080	2	0147 1246 03		HEX.BOLT	
3090	2	0301 2321 00		WASHER	
4010	1			PULLEY	
		2203 0337 06		QOF 2 8BAR(E)	
		2203 0337 05		QOF 2 10BAR(E)	
		2203 0337 05		QOF 2 116PSIG	
		2203 0337 04		QOF 2 145PSIG	
4020	1			V-BELT	
		1513 0289 52		QOF 2 8BAR(E)	
		1513 0289 02		QOF 2 10BAR(E)	
		1513 0289 01		QOF 2 116PSIG	
		1513 0289 48		QOF 2 145PSIG	
4030	1			MALE COUPLING	
		0581 2025 38		QOF 2 8BAR(E)	
		0581 2025 38		QOF 2 10BAR(E)	
	1			BUSHING	
		0605 8302 94		QOF 2 116PSIG	
		0605 8302 94		QOF 2 145PSIG	
4040	1			SAFETY VALVE	
		0830 1008 54		QOF 2 8BAR(E)	
		0830 1007 68		QOF 2 10BAR(E)	
		0830 1008 49		QOF 2 116PSIG	
		0830 1008 35		QOF 2 145PSIG	

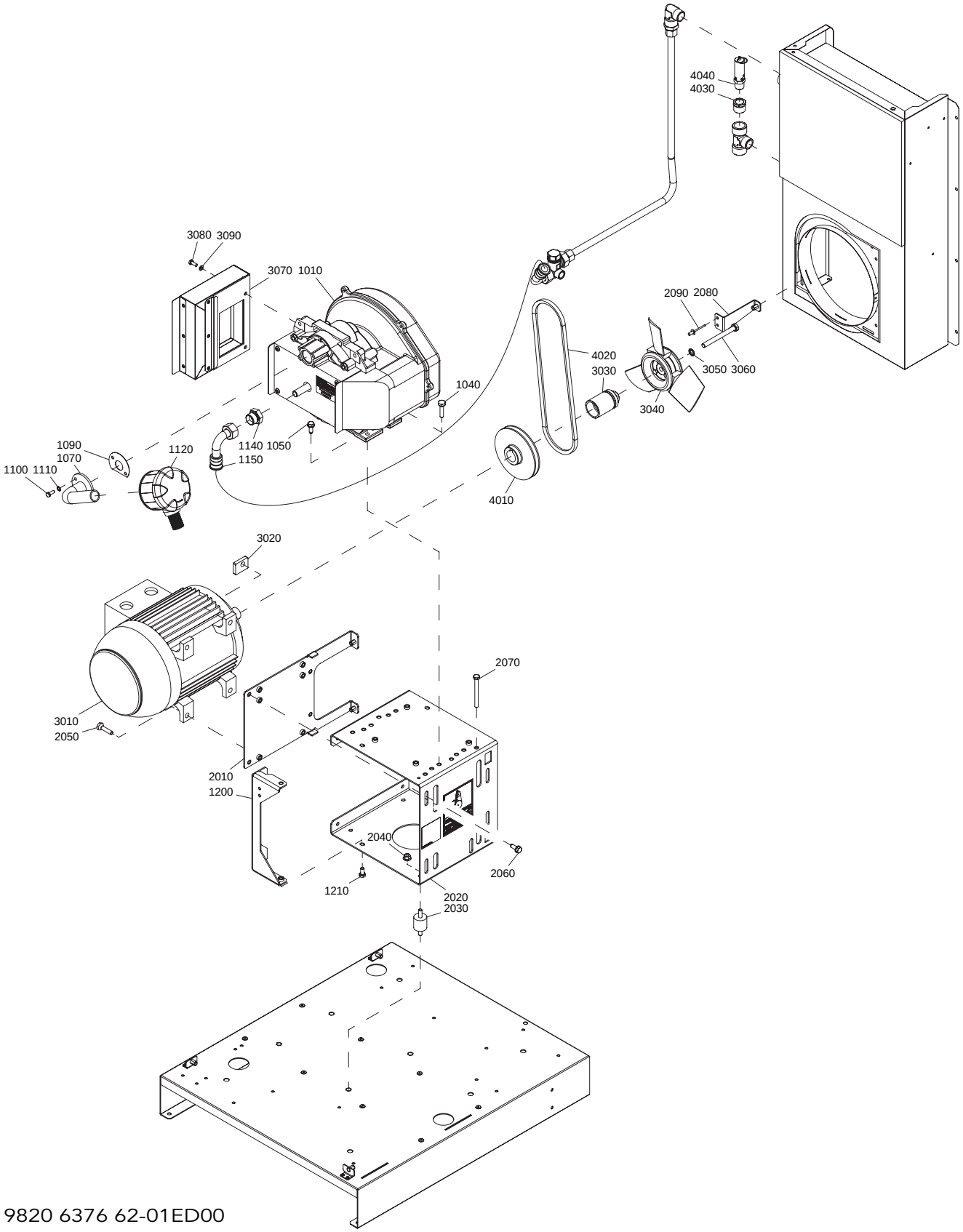

9820 6376 62-01ED00

Item No.	Qty.	Part Number		Description	Remarks
1010	1	2236 0500 00		AIR END	
1040	2	2203 0631 00		SCREW	
1050	2	0147 1963 08		HEXAGON BOLT	
1070	1	2236 0800 00		PIPE	
1090	1	2236 0096 00		SEAL INLET PIPE	
1100	2	0147 1246 03		HEX.BOLT	
1110	2	0333 3220 00		LOCK WASHER	
1120	**1**	**2236 0025 00**		**AIR FILTER**	
	1	1622 0658 00	•	FILTER ELEMENT	
1140	1	2203 0433 00		NIPPLE	
1150	1	2203 0366 02		HOSE	
1200	2	2203 0518 00		BRACKET	
1210	8	0147 1322 03		HEX.BOLT	
2010	1	2202 9741 00		MOTOR PLATE	
2020	**1**	**2203 0193 80**		**SUPPORT**	
	1	2203 0677 00	•	DECAL - BELT TENSIONING	
	1	1079 9902 69	•	DECAL - HOT SURFACE	
2030	4	0392 1100 15		VIBRATION DAMPER	
2040	4	0291 1185 30		LOCK NUT	
2050	4	2203 0631 00		SOCKET SCREW	
2060	4	0147 1963 08		HEXAGON BOLT	
2070	1	0147 1336 12		HEXAGON BOLT	
2080	1	2203 0374 00		STIRRUP	
2090	2	0129 3270 38		RIVET	
3010	1			MOTOR	
		2203 0521 04		QOF 3 230V/50HZ 1PH	
		2203 0521 11		QOF 3 230V/50HZ 3PH	
		2203 0521 03		QOF 3 230V/60HZ 1PH	
		2203 0521 11		QOF 3 400V/50HZ 3PH	
		2203 0521 11		QOF 3 400N-V/50HZ 3PH	
		2203 0521 09		QOF 3 200/230/460V/60HZ 3PH UL-CUL	
3020	1			SPACER	
		2203 0523 00		QOF 3 230V/50HZ 3PH	
		2203 0523 00		QOF 3 400V/50HZ 3PH	
		2203 0523 00		QOF 3 400N-V/50HZ 3PH	
3030	1	2203 0469 00		SPACER	
3040	1	2202 9749 03		FAN	
3050	1	0333 4232 00		WASHER	
3060	1	0147 1377 03		HEXAGON BOLT	
3070	**1**	**2203 0473 80**		**EXHAUST BOX**	
	1	2203 0520 00	•	SEAL	
3080	2	0147 1246 03		HEX.BOLT	
3090	2	0301 2321 00		WASHER	
4010	1			PULLEY	
		2203 0337 04		QOF 3 8BAR(E)	
		2203 0337 03		QOF 3 10BAR(E)	
		2203 0337 02		QOF 3 116PSIG	
		2203 0337 01		QOF 3 145PSIG	
4020	1			V-BELT	
		1513 0289 48		QOF 3 8BAR(E)	
		1513 0289 47		QOF 3 10BAR(E)	
		1513 0289 55		QOF 3 116PSIG	
		1513 0289 55		QOF 3 145PSIG	
4030	1			BUSHING	
		0605 8302 94		QOF 3 116PSIG	
		0605 8302 94		QOF 3 145PSIG	
4040	1			SAFETY VALVE	
		0830 1008 54		QOF 3 8BAR(E)	
		0830 1007 68		QOF 3 10BAR(E)	
		0830 1008 49		QOF 3 116PSIG	
		0830 1008 35		QOF 3 145PSIG	

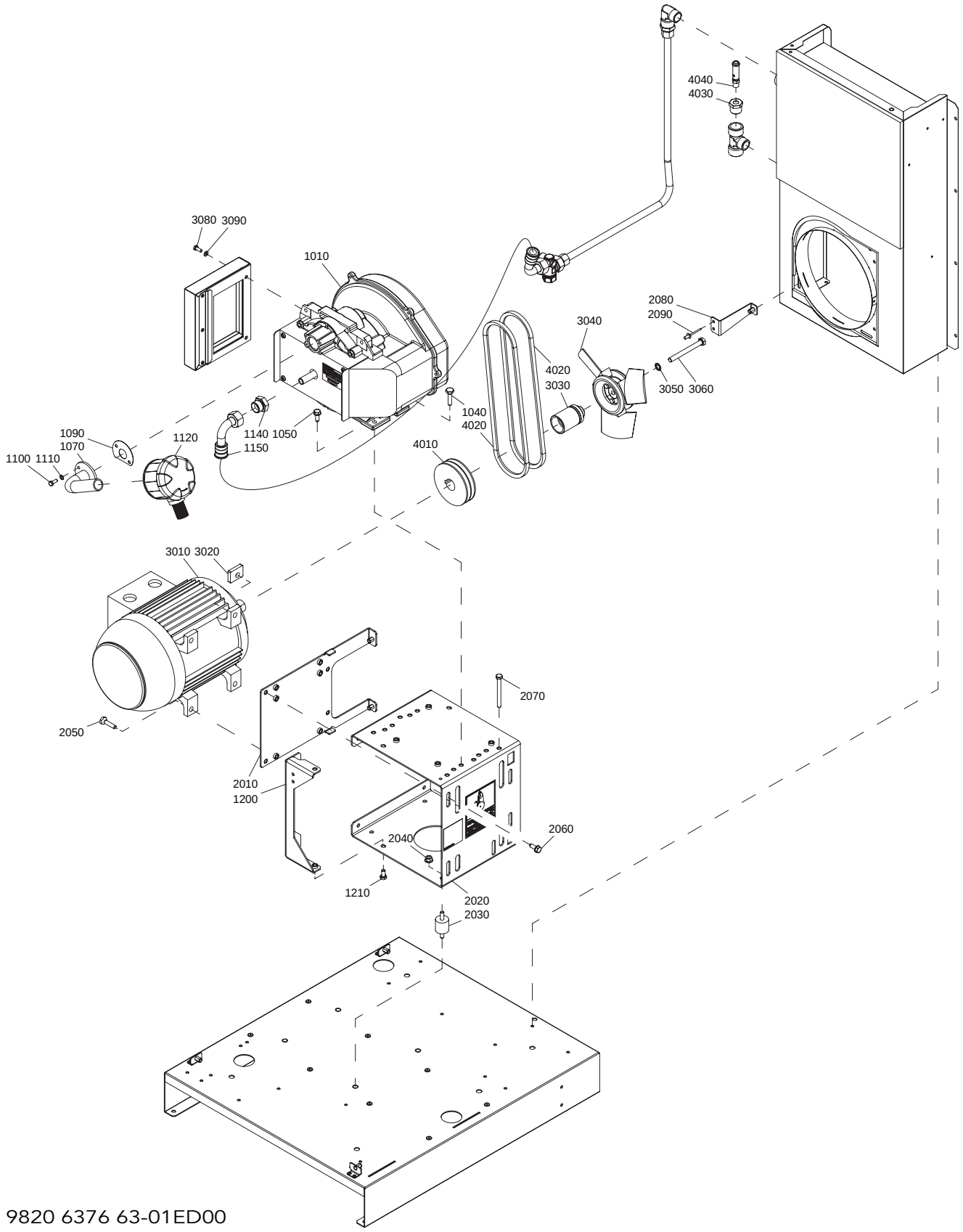

9820 6376 63-01ED00

Item No.	Qty.	Part Number		Description	Remarks
1010	1			AIR END	
		2236 0501 00		QOF 5 8BAR(E)	
		2236 0502 00		QOF 5 10BAR(E)	
		2236 0501 00		QOF 5 116PSIG	
		2236 0502 00		QOF 5 145PSIG	
1040	2	2203 0631 00		SCREW	
1050	2	0147 1963 08		HEXAGON BOLT	
1070	1	2236 0800 00		PIPE	
1090	1	2236 0096 00		SEAL INLET PIPE	
1100	2	0147 1246 03		HEX.BOLT	
1110	2	0333 3220 00		LOCK WASHER	
1120	1	2236 0025 00		AIR FILTER	
1140	1	2203 0433 00		NIPPLE	
1150	1	2203 0366 02		HOSE	
1200	2	2203 0518 00		BRACKET	
1210	8	0147 1322 03		HEX.BOLT	
2010	1	2202 9741 00		MOTOR PLATE	
2020	**1**	**2203 0193 80**		**SUPPORT**	
	1	2203 0677 00	•	DECAL - BELT TENSIONING	
	1	1079 9902 69	•	DECAL - HOT SURFACE	
2030	4	0392 1100 15		VIBRATION DAMPER	
2040	4	0291 1185 30		LOCK NUT	
2050	4	2203 0631 00		SOCKET SCREW	
2060	4	0147 1963 08		HEXAGON BOLT	
2070	1	0147 1336 12		HEXAGON BOLT	
2080	1	2203 0374 00		STIRRUP	
2090	2	0129 3270 38		RIVET	
3010	1			MOTOR	
		2203 0521 12		QOF 5 230V/50HZ 3PH IEC	
		2203 0521 12		QOF 5 400V/50HZ 3PH IEC	
		2203 0521 12		QOF 5 400N-V/50HZ 3PH IEC	
		2203 0521 10		QOF 5 200/230/460V/60HZ 3PH UL-CUL	
3020	1			SPACER	
		2203 0523 00		QOF 5 230V/50HZ 3PH IEC	
		2203 0523 00		QOF 5 400V/50HZ 3PH IEC	
		2203 0523 00		QOF 5 400N-V/50HZ 3PH IEC	
3030	1	2203 0469 00		SPACER	
3040	1	2202 9749 03		FAN	
3050	1	0333 4232 00		WASHER	
3060	1	0147 1377 03		HEXAGON BOLT	
3070	**1**	**2203 0428 80**		**EXHAUST BOX**	
	1	2203 0478 00	•	SEAL	
3080	2	0147 1246 03		HEX.BOLT	
3090	2	0301 2321 00		WASHER	
4010	1			PULLEY	
		2203 0338 02		QOF 5 8BAR(E)	
		2203 0338 02		QOF 5 10BAR(E)	
		2203 0338 01		QOF 5 116PSIG	
		2203 0338 01		QOF 5 145PSIG	
4020	1			V-BELT	
		1513 0289 49		QOF 5 8BAR(E)	
		1513 0289 49		QOF 5 10BAR(E)	
		1513 0289 50		QOF 5 116PSIG	
		1513 0289 50		QOF 5 145PSIG	
4030	1			MALE COUPLING	
		0581 2025 38		QOF 5 8BAR(E)	
		0581 2025 38		QOF 5 10BAR(E)	
	1			BUSHING	
		0605 8302 94		QOF 5 116PSIG	
		0605 8302 94		QOF 5 145PSIG	
4040	1			SAFETY VALVE	
		0830 1008 54		QOF 5 8BAR(E)	
		0830 1007 68		QOF 5 10BAR(E)	
		0830 1008 49		QOF 5 116PSIG	
		0830 1008 35		QOF 5 145PSIG	

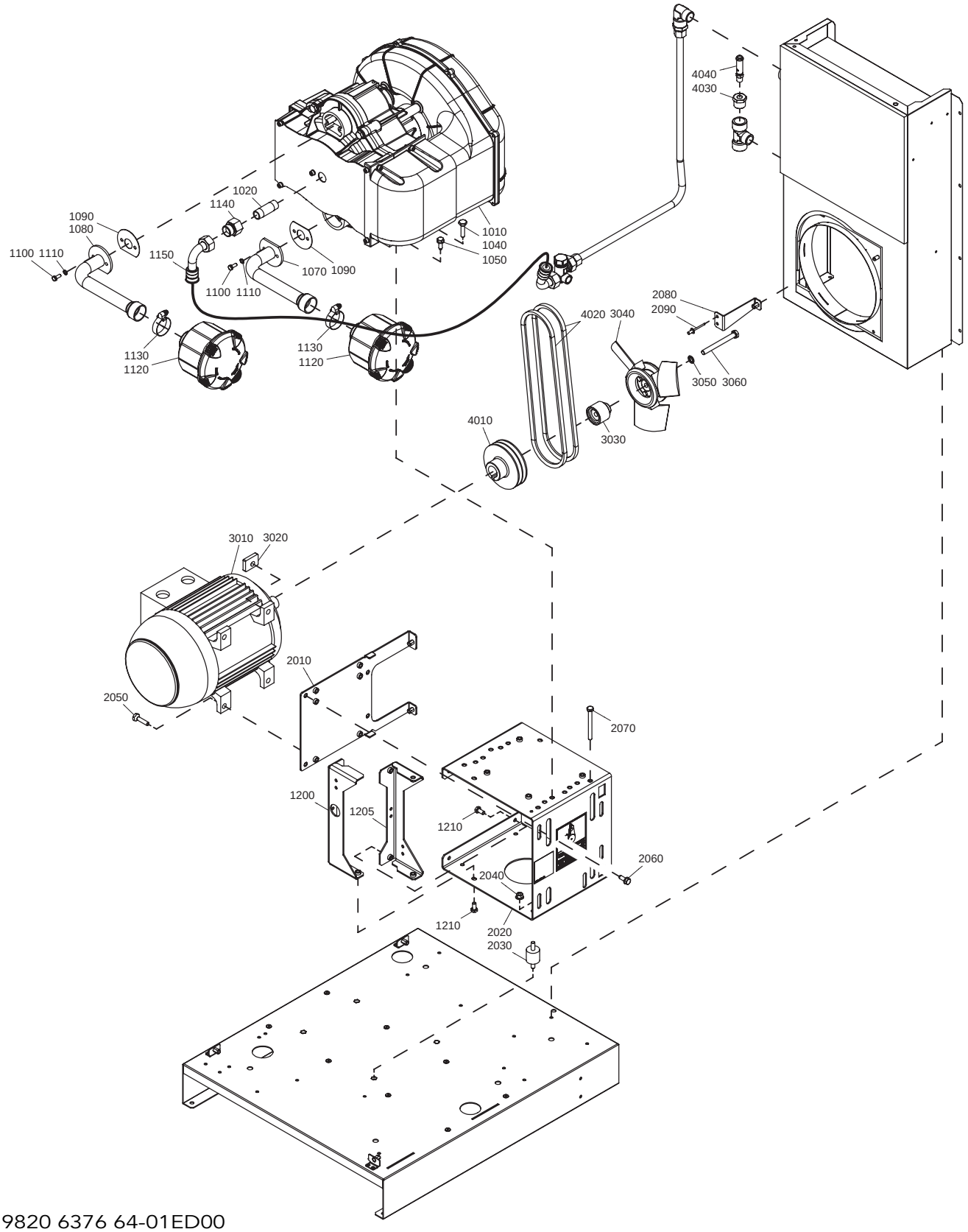

9820 6376 64-01ED00

Item No.	Qty.	Part Number		Description	Remarks
1010	1			SERVICE STAGE	
		1616 7418 83		QOF 7.5 8BAR(E)	
		1616 7418 82		QOF 7.5 10BAR(E)	
		1616 7418 83		QOF 7.5 116PSIG	
		1616 7418 82		QOF 7.5 145PSIG	
1020	1	0551 0002 83		PIPE THREADED	
1040	2	2203 0631 00		SCREW	
1050	2	1079 1472 06		BOLT	
1070	1	2236 0801 00		PIPE	
1080	1	2236 0802 00		PIPE	
1090	2	2236 0435 00		GASKET	
1100	4	0147 1246 03		HEX.BOLT	
1110	4	0333 3220 00		LOCK WASHER	
1120	**2**	**2236 0471 00**		**AIR FILTER**	
	1	1613 9001 00	•	FILTER ELEMENT	
1130	2	0347 6112 00		HOSE CLIP	
1140	1	2203 0434 00		NIPPLE	
1150	1	2203 0366 01		HOSE	
1200	1	2203 0519 00		BRACKET	
1205	1	2203 0518 00		BRACKET	
1210	7	0147 1322 03		HEX.BOLT	
2010	1	2202 9741 00		MOTOR PLATE	
2020	**1**	**2203 0193 80**		**SUPPORT**	
	1	2203 0677 00	•	DECAL - BELT TENSIONING	
	1	1079 9902 69	•	DECAL - HOT SURFACE	
2030	4	0392 1100 15		VIBRATION DAMPER	
2040	4	0291 1185 30		LOCKNUT	
2050	4	2203 0631 00		SOCKET SCREW	
2060	4	0147 1963 08		HEXAGON BOLT	
2070	1	0147 1336 12		HEXAGON BOLT	
2080	1	2203 0374 00		STIRRUP	
2090	2	0129 3270 38		RIVET	
3010	1			MOTOR	
		2203 0521 13		QOF 7.5 230V/50HZ 3PH	
		2203 0521 13		QOF 7.5 400V/50HZ 3PH	
		2203 0521 13		QOF 7.5 400N-V/50HZ 3PH	
		2203 0521 17		QOF 7.5 200/230/460V/60HZ 3PH	
3020	1			SPACER	
		2203 0523 00		QOF 7.5 230V/50HZ 3PH	
		2203 0523 00		QOF 7.5 400V/50HZ 3PH	
		2203 0523 00		QOF 7.5 400N-V/50HZ 3PH	
3030	1	2203 0470 00		SPACER	
3040	1	2202 9749 03		FAN	
3050	1	0333 4232 00		WASHER	
3060	1	0147 1374 03		HEXAGON BOLT	
3110	1	0697 9746 24		ADAPTER	
4010	1			PULLEY	
		2203 0365 02		QOF 7.5 8BAR(E)	
		2203 0365 01		QOF 7.5 10BAR(E)	
		2203 0365 03		QOF 7.5 116PSIG	
		2203 0365 04		QOF 7.5 145PSIG	
4020	1			V-BELT SET	
		1513 0289 31		QOF 7.5 8BAR(E)	
		1513 0289 29		QOF 7.5 10BAR(E)	
		1513 0289 29		QOF 7.5 116PSIG	
		1513 0289 30		QOF 7.5 145PSIG	
4030	1			MALE COUPLING	
		0581 2025 38		QOF 7.5 8BAR(E)	
		0581 2025 38		QOF 7.5 10BAR(E)	
	1			BUSHING	
		0605 8302 94		QOF 7.5 116PSIG	
		0605 8302 94		QOF 7.5 145PSIG	
4040	1			SAFETY VALVE	
		0830 1008 54		QOF 7.5 8BAR(E)	
		0830 1007 68		QOF 7.5 10BAR(E)	
		0830 1008 49		QOF 7.5 116PSIG	
		0830 1008 35		QOF 7.5 145PSIG	

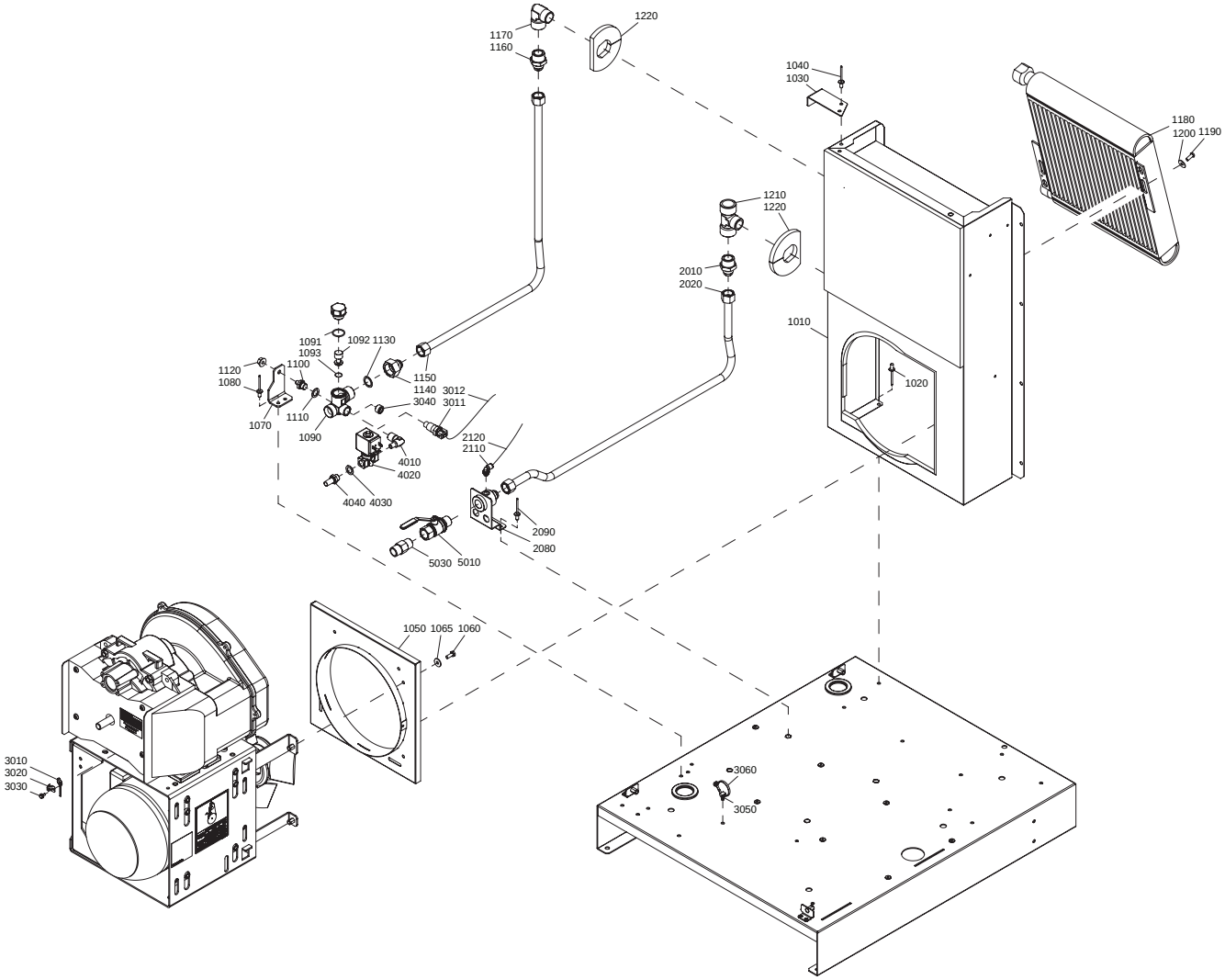

9820 6376 65-01ED00

Item No.	Qty.	Part Number		Description	Remarks
1010	1	2203 0328 80		DUCT BOX	1)
1020	5	0129 3270 38		RIVET	
1030	1	2203 0331 00		BRACKET	
1040	2	0129 3270 38		RIVET	
1050	1	2203 0373 00		DUCT FAN ASSY	
1060	3	0147 1246 03		HEX.BOLT	
1065	3	0300 0274 64		WASHER	
1070	1	2203 0430 00		BRACKET	
1080	2	0129 3270 38		RIVET	
1090	**1**	**2236 0499 80**		**VALVE**	
1091	1	0663 2112 13	•	O-RING	
1092	1	2236 0509 00	•	PISTON	
1093	1	0663 2108 05	•	O-RING	
1100	1	2203 0431 00		PLUG	
1110	1	0653 1062 00		FLAT GASKET	
1120	1	0291 1185 30		LOCK NUT	
1130	1	2202 7425 02		GASKET	
1140	1	2203 0368 00		FITTING	
1150	1	2203 0621 00		PIPE AIR COOLER	
1160	1	2203 0369 00		NIPPLE	
1170	1	0605 9500 28		FITTING	
1180	1	1622 0594 09		AIR COOLER	
1190	1	0215 0003 91		SCREW	
1200	1	0300 0274 64		WASHER	
1210	1	0605 9500 56		FITTING PIPE	
1220	2	2203 0480 00		FOAM	
2010	1	2203 0369 00		NIPPLE	
2020	1	2203 0626 00		PIPE AIR OUTLET	
2080	1	2203 0432 00		AIR OUTLET FLANGE	
2090	2	0129 3270 38		RIVET	
2110	1	9090 1518 00		ELBOW COUPLING	
2120	AR	0070 7250 04		PLASTIC TUBE	
3010	1			TEMPERATURE SWITCH	
		2203 0502 01		70°C	2)
		2203 0502 02		80°C	3)
3011	1			TEMPERATURE SWITCH	
		2203 0508 01		200° C	4)
3012		9828 4505 89		WIRING TEMPERATURE SWITCH	4)
3020	1	1089 9343 03		SUPPORT	2) 3)
3030	1	0226 0300 41		SCREW	2) 3)
3040	1	0686 3115 55		PLUG	6)
3050	1	6236 3126 00		CLIP	2) 3)
3060	1	0348 0101 17		CABLE STRIP	2) 3)
4010	1	1503 2565 41		ELBOW	
4020	1	2203 0509 00		SOLENOID VALVE	
4030	1	0653 1062 00		FLAT GASKET	
4040	1	9090 0508 00		SILENCER	
5010	1	0852 0011 52		BALL VALVE	
5030	1			HEXAGON NIPPLE	
		0603 4150 14		UL-CUL	

1) LINED WITH FOAM: 0395 6001 62 (AR) 10 X 2040 X 1650 (SELF ADHESIVE)
2) QOF 2 - 8BAR(E) , QOF 2 - 116PSIG, QOF 3 , QOF 5
3) QOF 2 - 10BAR(E) , QOF 2 - 145PSIG,
4) QOF 7.5
5) QOF 2 AND QOF 3 - SINGLE PHASE
6) QOF 2, QOF 3, QOF 5 - THREE PHASE

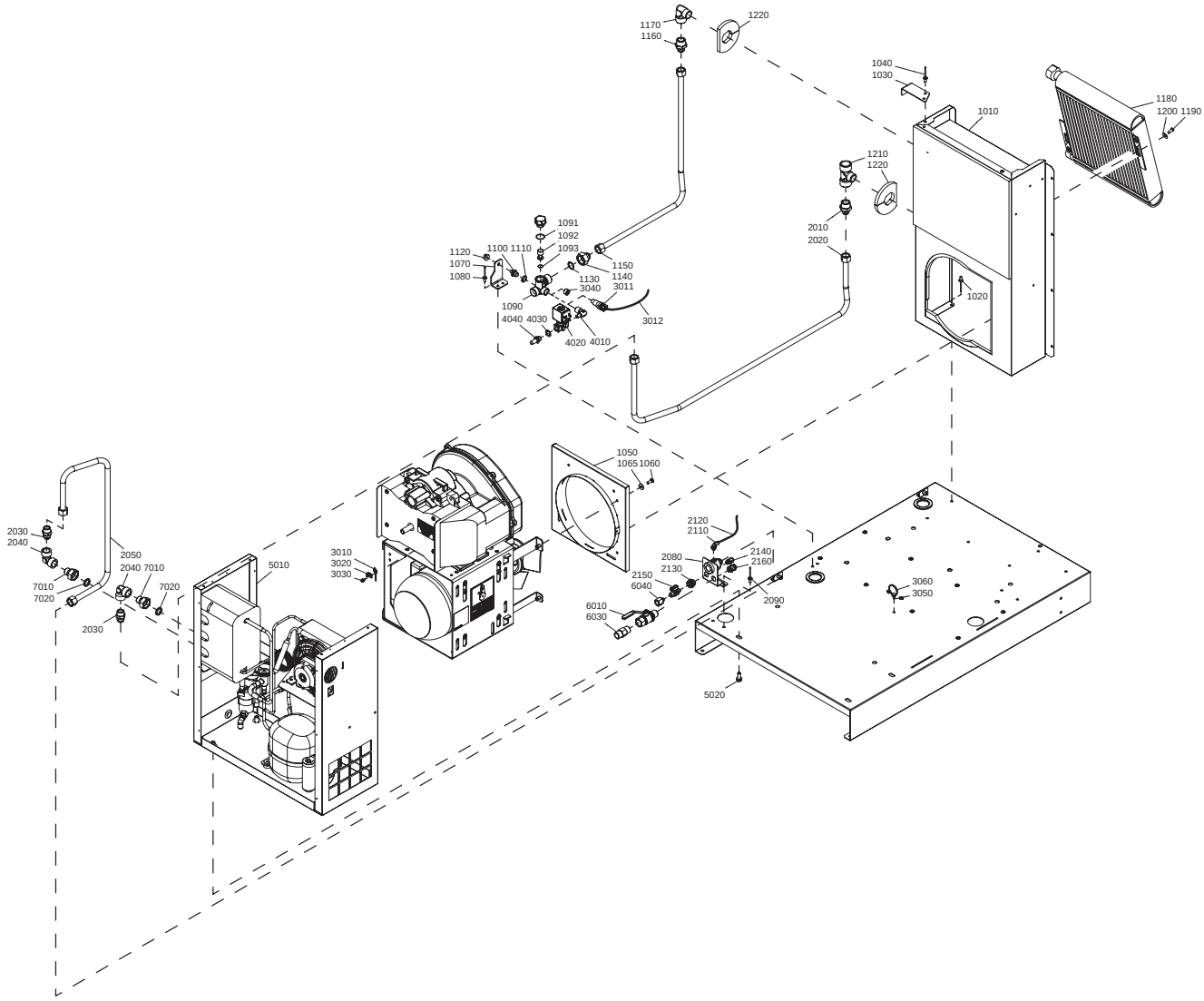

9820 6376 66-01ED00

Item No.	Qty.	Part Number		Description	Remarks
1010	1	2203 0328 80		DUCT BOX	1)
1020	5	0129 3270 38		RIVET	
1030	1	2203 0331 00		BRACKET	
1040	2	0129 3270 38		RIVET	
1050	1	2203 0373 00		DUCT FAN ASSY	
1060	3	0147 1246 03		HEX.BOLT	
1065	3	0300 0274 64		WASHER	
1070	1	2203 0430 00		BRACKET	
1080	2	0129 3270 38		RIVET	
1090	**1**	**2236 0499 80**		**VALVE**	
1091	1	0663 2112 13	•	O-RING	
1092	1	2236 0509 00	•	PISTON	
1093	1	0663 2108 05	•	O-RING	
1100	1	2203 0431 00		PLUG	
1110	1	0653 1062 00		FLAT GASKET	
1120	1	0291 1185 30		LOCK NUT	
1130	1	2202 7425 02		GASKET	
1140	1	2203 0368 00		FITTING	
1150	1	2203 0621 00		PIPE AIR COOLER	
1160	1	2203 0369 00		NIPPLE	
1170	1	0605 9500 28		FITTING	
1180	1	1622 0594 09		AIR COOLER	
1190	1	0215 0003 91		SCREW	
1200	1	0300 0274 64		WASHER	
1210	1	0605 9500 56		FITTING PIPE	
1220	2	2203 0480 00		FOAM	
2010	1	2203 0369 00		NIPPLE	
2020	1	2203 0622 00		PIPE AIR COOLER-DRYER	
2030	2	2203 0380 00		NIPPLE	
2040	2	0605 9500 38		FITTING	
2050	1	2203 0623 00		PIPE AIR OUTLET	
2080	1	2203 0432 00		AIR OUTLET FLANGE	
2090	2	0129 3270 38		RIVET	
2110	1	9090 1518 00		ELBOW COUPLING	
2120	AR	0070 7250 04		PLASTIC TUBE	
2130	1	0570 7017 28		BULKHEAD UNION	
2140	1	0583 8100 66		FITTING	
2150	1	0852 0011 53		BALL VALVE	
2160	1	0583 8100 70		FITTING PIPE	
3010	1			TEMPERATURE SWITCH	
		2203 0502 01		70°C	2)
		2203 0502 02		80°C	3)
3011	1			TEMPERATURE SWITCH	
		2203 0508 01		200° C	4)
3012				WIRING TEMPERATURE SWITCH	4)
		9828 4505 89		200° C	2) 3)
3020	1	1089 9343 03		SUPPORT	2) 3)
3030	1	0226 0300 41		SCREW	6)
3040	1	0686 3115 55		PLUG	2) 3)
3050	1	6236 3126 00		CLIP	2) 3)
3060	1	0348 0101 17		CABLE STRIP	2) 3)
4010	1	1503 2565 41		ELBOW	5)
4020	1	2203 0509 00		SOLENOID VALVE	5)
4030	1	0653 1062 00		FLAT GASKET	5)
4040	1	9090 0508 00		SILENCER	5)

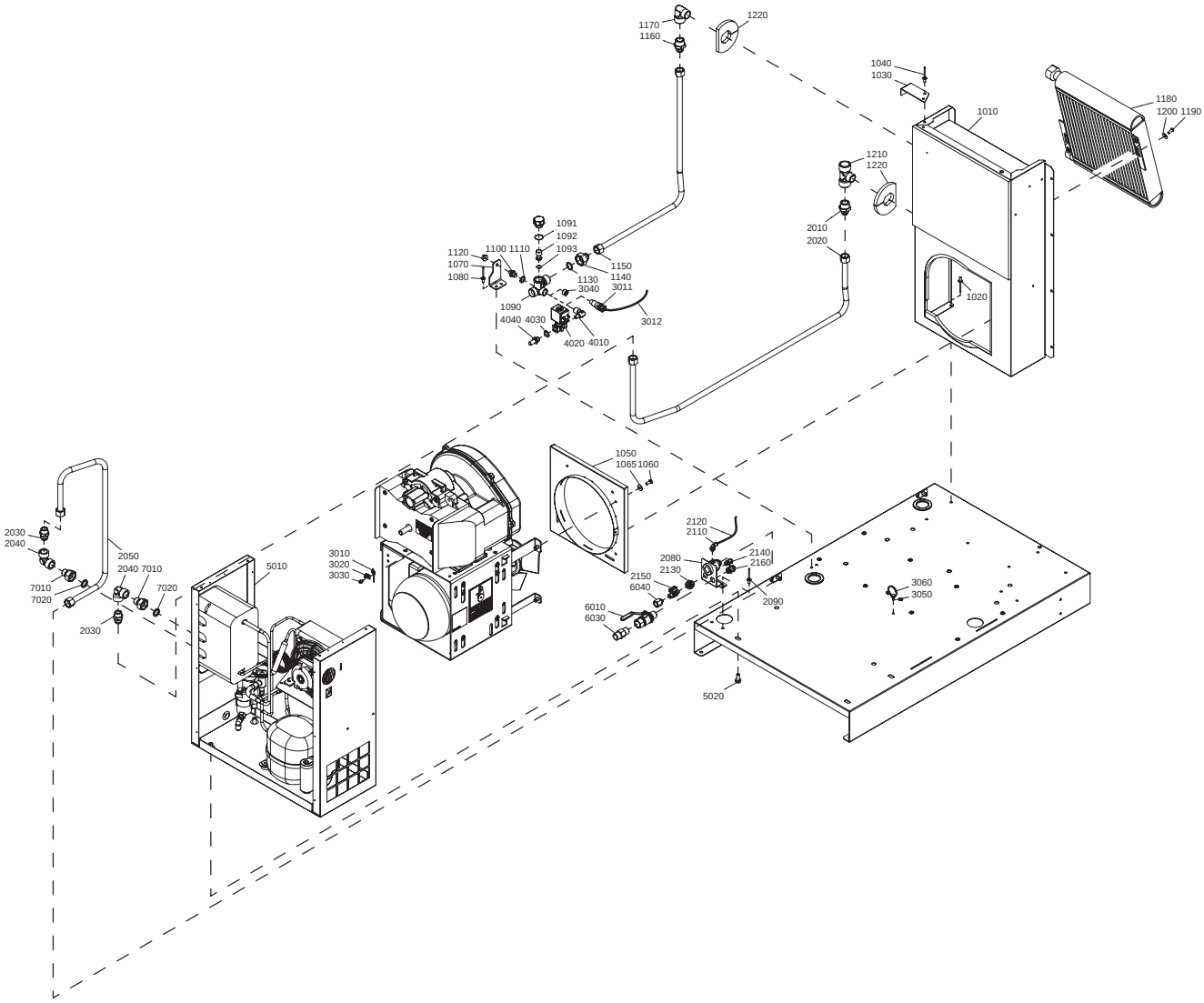

9820 6376 66-01ED00

Item No.	Qty.	Part Number	Description	Remarks
5010	**1**	**<<< >>>**	**DRYER**	
5020	3	0147 1963 08	HEXAGON BOLT	
6010	1	0852 0011 52	BALL VALVE	
6030	1		NIPPLE	
		0603 4150 14	UL-CUL	
6040	1		BUSHING	
		0605 8350 55	UL-CUL	
7010	2	2202 7703 01	PIPE FITTING	
7020	2	2202 7719 01	GASKET	

1) LINED WITH FOAM: 0395 6001 62 (AR) 10 X 2040 X 1650 (SELF ADHESIVE)
2) QOF 2 W/DRYER - 8BAR(E) , QOF 2 W/DRYER - 116PSIG, QOF 3 W/DRYER, QOF 5 W/DRYER
3) QOF 2 W/DRYER - 10BAR(E) , QOF 2 W/DRYER - 145PSIG,
4) QOF 7.5 W/DRYER
5) QOF 2 W/DRYER AND QOF 3 W/DRYER - SINGLE PHASE
6) QOF 2 W/DRYER, QOF 3 W/DRYER, QOF 5 W/DRYER - THREE PHASE

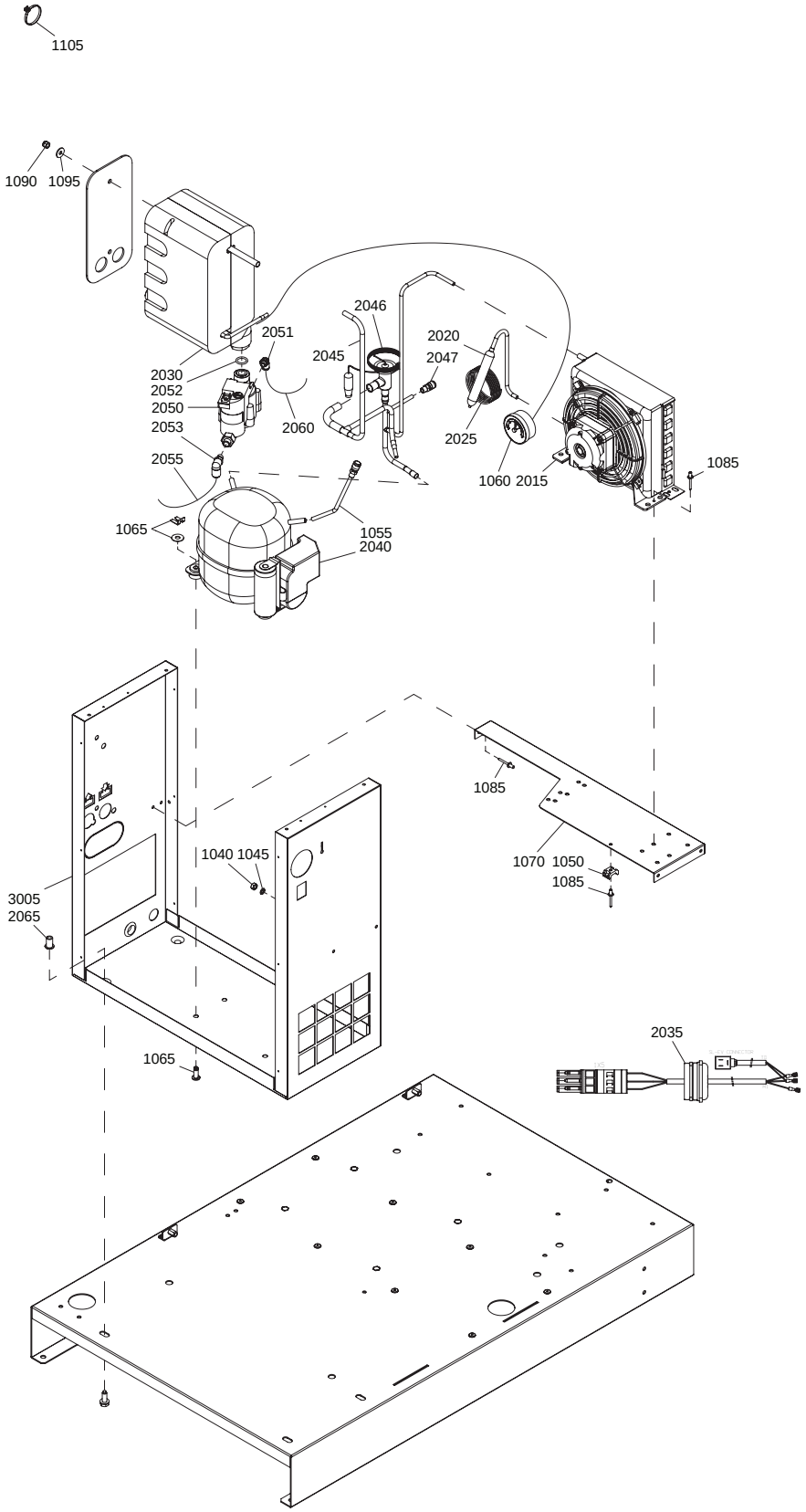

9820 6376 67-01ED00

Item No.	Qty.	Part Number		Description	Remarks
	1			**AIR DRYER**	1)
		2200 9027 39		ID 11 50HZ IEC	
		2200 9026 99		ID 11 60HZ IEC / UL-CUL	
1010	AR	0017 9862 67	•	INSULATION TAPE	
1025	AR	0395 1010 05	•	INSULATION TAPE	
1030	AR	2202 7587 01	•	INSULATION TAPE	
1040	1	0266 2108 00	•	NUT	
1045	2	0333 4220 00	•	WASHER	
1050	1	0348 0110 03	•	ANCHOR PLATE	
1055	1	2200 5997 43	•	CHECK VALVE	
1060	1	2202 2608 91	•	THERMOMETER	
1065	4	2202 0051 33	•	SNUP-ON KIT	
1070	1	2203 0055 00	•	STIRRUP	
1085	11	0129 3270 42	•	RIVET	
1090	2	0291 1128 15	•	LOCK NUT	
1095	2	0300 0274 64	•	WASHER	
1105	9	0348 0101 20	•	CABLE TIE	
2015	**1**		•	**CONDENSER**	
		2202 7498 87		50HZ	
		2202 7498 88		60HZ	
2020	1	2202 7569 02	•	FILTER DRYER	
2025	1	2202 7584 08	•	CAPILLARY	
2030	1	2202 8922 88	•	HEAT EXCHANGER ASSY	
2035	1		•	WIRE HARNESS	
		9828 4229 71		50HZ	
		9828 4404 01		60HZ	
2040	**1**	**1624 9123 06**	•	**COMPRESSOR**	
	1	1617 1549 17	••	START CAPACITOR	
	1	1617 1551 58	••	START RELAY	
	1	1617 1550 71	••	OVERLOAD PROTECTION	
	1	1617 1528 80	••	ANTI VIBRATION MOUNTING SET	
2045	**1**	**2203 0641 80**	•	**PIPE ASSY**	
2046	1	2202 7324 04	••	HOT GAS BY-PASS	
2047	1	2202 8516 00	••	NON RETURN VALVE	
2050	**1**	**1624 9049 80**	•	**DRAIN**	
2051	1	0583 8120 73	••	COUPLING	1/8" - Ø6
2052	1	0663 9096 00	••	O-RING	
2053	1	0583 8120 14	••	COUPLING	1/8" - Ø6
2055	AR	0070 7250 07	•	HOSE	Ø8
2060	AR	0070 7250 04	•	HOSE	Ø6
2065	4	0298 1000 22	•	INSERT	
2070	AR	2202 7587 01	•	TAPE	
3005	1	2202 9961 81	•	FRAME	

1) REFRIGERANT R134A

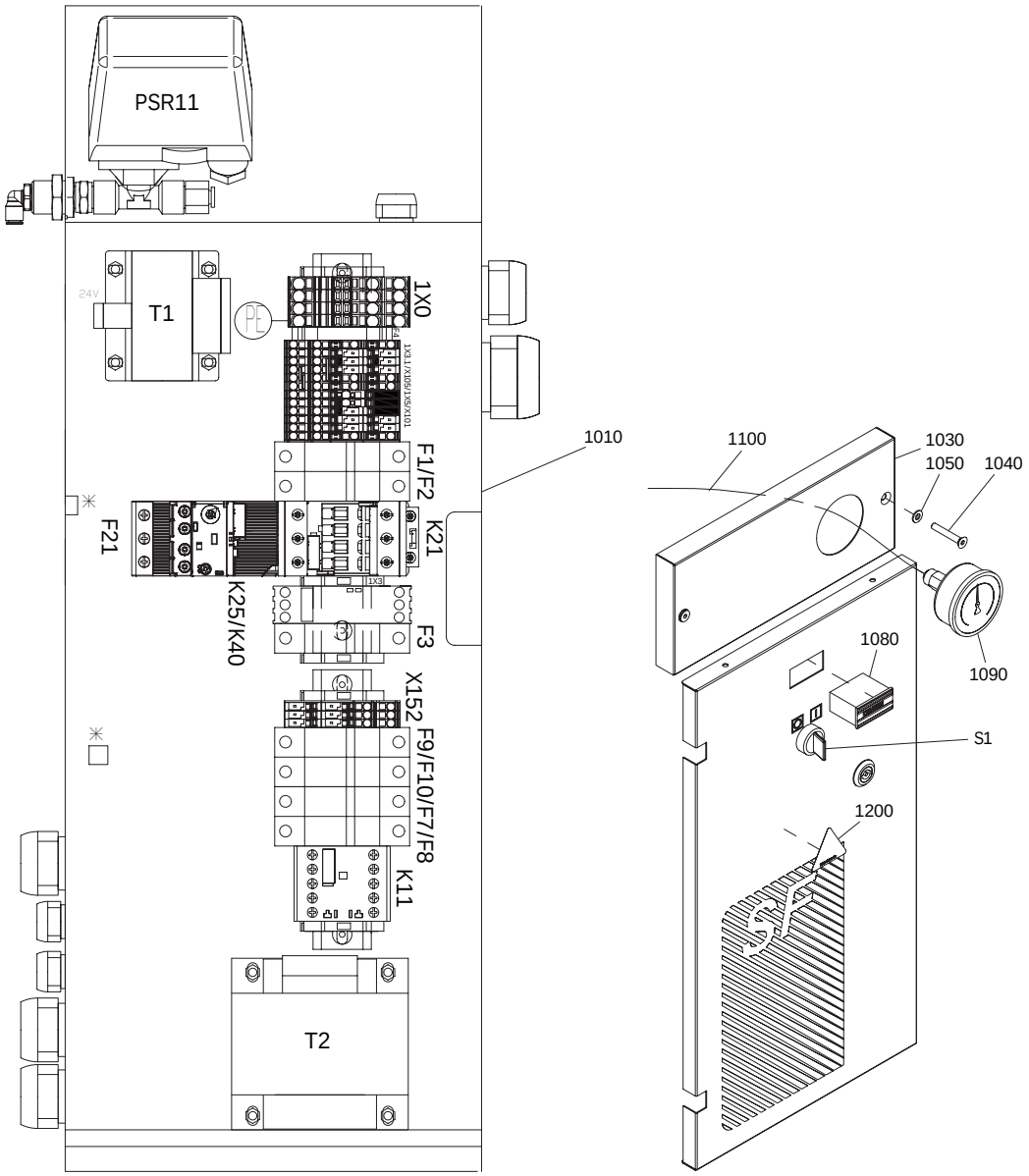
PSR11
T1
24V
PE
1X0
1X3 1X005 1X5X101
F1/F2
K21
F21
K25/K40
1X3
F3
X152
F9/F10/F7/F8
K11
T2
1010
1100
1030
1050
1040
1080
1090
S1
1200

Item No.	Qty.	Part Number		Description	Remarks
	1			**CUBICLE**	
		9828 4504 01		QOF 2 230V/50HZ 1PH PACK IEC	
		9828 4504 02		QOF 2 230V/50HZ 1PH W/DRYER IEC	
		9828 4504 03		QOF 3 230V/50HZ 1PH PACK IEC	
		9828 4504 04		QOF 3 230V/50HZ 1PH W/DRYER IEC	
		9828 4504 10		QOF 3 230V/50HZ 3PH PACK IEC	
		9828 4504 11		QOF 3 230V/50HZ 3PH W/DRYER IEC	
		9828 4504 15		QOF 3 400V/50HZ 3PH PACK IEC	
		9828 4504 16		QOF 3 400V/50HZ 3PH W/DRYER IEC	
		9828 4504 17		QOF 3 400N-V/50HZ 3PH W/DRYER IEC	
		9828 4504 10		QOF 5 230V/50HZ 3PH PACK IEC	
		9828 4504 11		QOF 5 230V/50HZ 3PH W/DRYER IEC	
		9828 4504 20		QOF 5 400V/50HZ 3PH PACK IEC	
		9828 4504 21		QOF 5 400V/50HZ 3PH W/DRYER IEC	
		9828 4504 22		QOF 5 400N-V/50HZ 3PH W/DRYER IEC	
		9828 4504 10		QOF 7.5 230V/50HZ 3PH PACK IEC	
		9828 4504 11		QOF 7.5 230V/50HZ 3PH W/DRYER IEC	
		9828 4504 25		QOF 7.5 400V/50HZ 3PH PACK IEC	
		9828 4504 26		QOF 7.5 400V/50HZ 3PH W/DRYER IEC	
		9828 4504 27		QOF 7.5 400N-V/50HZ 3PH W/DRYER IEC	
WH PSR11	1	9828 4504 70	•	WIRE HARNESS	
WH TSHH11	1	9828 4504 71	•	WIRE HARNESS	
WH M1	1		•	WIRE HARNESS	
		9828 4504 76		9828 4504 10	
		9828 4504 76		9828 4504 11	
		9828 4504 72		9828 4504 15	
		9828 4504 72		9828 4504 16	
		9828 4504 72		9828 4504 17	
		9828 4504 72		9828 4504 20	
		9828 4504 72		9828 4504 21	
		9828 4504 72		9828 4504 22	
		9828 4504 74		9828 4504 25	
		9828 4504 74		9828 4504 26	
		9828 4504 74		9828 4504 27	
WH POWER SUPPLY					
	1		•	WIRE HARNESS	
		9828 4504 78		9828 4504 01	
		9828 4504 78		9828 4504 02	
		9828 4504 78		9828 4504 03	
		9828 4504 78		9828 4504 04	
		9828 4504 81		9828 4504 10	
		9828 4504 81		9828 4504 11	
		9828 4504 79		9828 4504 15	
		9828 4504 79		9828 4504 16	
		9828 4504 82		9828 4504 17	
		9828 4504 79		9828 4504 20	
		9828 4504 79		9828 4504 21	
		9828 4504 82		9828 4504 22	
		9828 4504 80		9828 4504 25	
		9828 4504 80		9828 4504 26	
		9828 4504 82		9828 4504 27	
WH Y3	1		•	WIRE HARNESS	
		9828 4505 88		9828 4504 01	
		9828 4505 88		9828 4504 02	
		9828 4505 88		9828 4504 03	

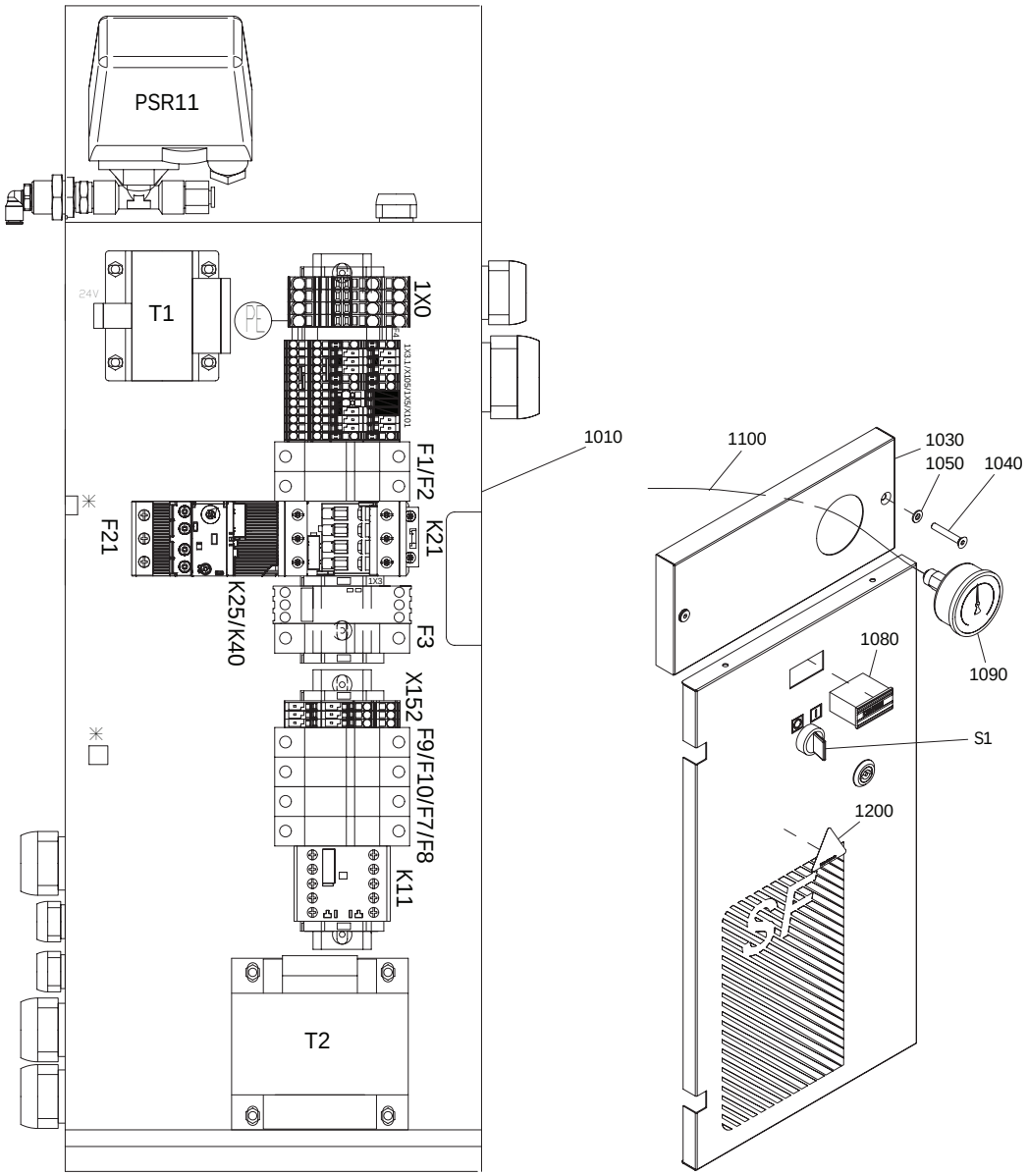
PSR11
T1
24V
PE
1X0
1X3 1X005 1X5X101
F1/F2
K21
F21
K25/K40
F3
X152
F9/F10/F7/F8
K11
T2
1010
1100
1030
1050
1040
1080
1090
S1
1200

Item No.	Qty.	Part Number		Description	Remarks
		9828 4505 88		9828 4504 04	
K40	1		•	MODULE UNLOAD STARTER	
		9828 4505 75		9828 4504 01	
		9828 4505 75		9828 4504 02	
		9828 4505 75		9828 4504 03	
		9828 4505 75		9828 4504 04	
AD	-	9828 4504 97	•	INSTRUCTION ASSEMBLY TERMINAL BLOCK	
SD	1	9828 4504 99	•	SERVICE DIAGRAM	
AD	-	9828 4504 90	•	ASSEMBLY DRAWING CUBICLE	
AD	-		•	ASSEMBLY DRAWING PRESSURE SWITCH (PSR11)	
		9828 4504 98		9828 4504 01	
		9828 4504 98		9828 4504 02	
		9828 4504 98		9828 4504 03	
		9828 4504 98		9828 4504 04	
-	-	-	•	POWER INTERNAL WIRING	
-	-	-	•	CONTROL INTERNAL WIRING	
T1 GROUNDING					
	1	0694 5285 14	•	RECEPTACLE	
DOOR GROUNDING					
	1	0694 5285 14	•	RECEPTACLE	
SCREWS FOR T1					
	4	0160 0996 13	•	CROSS REC SCREW	
T2 GROUNDING					
	1		•	RECEPTACLE	
		0694 5285 14		9828 4504 16	
		0694 5285 14		9828 4504 21	
		0694 5285 14		9828 4504 26	
SCREWS FOR T2					
	2		•	SCREW	
		0160 0996 17		9828 4504 16	
		0160 0996 17		9828 4504 21	
		0160 0996 17		9828 4504 26	
P1	2	1088 0003 24	•	CABLE LUG	
-AR	1202 6584 00		•	SEAL	
SUPPLY	1	0698 5141 17	•	CABLE GLAND	
SUPPLY	1	0697 9809 54	•	NUT	
M1 (CUBICLE SIDE)					
	1		•	CABLE GLAND	
		0698 5141 17		9828 4504 01	
		0698 5141 17		9828 4504 02	
		0698 5141 17		9828 4504 03	
		0698 5141 17		9828 4504 04	
M1 (CUBICLE SIDE)					
	1		•	NUT	
		0697 9809 54		9828 4504 01	
		0697 9809 54		9828 4504 02	
		0697 9809 54		9828 4504 03	
		0697 9809 54		9828 4504 04	
-	2	0348 0102 23	•	CABLE TIE	
PSR11	1	1089 0389 53	•	PRESSURE SWITCH	
PSR11	1	9090 1508 00	•	STRAIGHT COUPLING	
PSR11	1	9740 2027 22	•	BRANCH TEE BODY	
PSR11	1	0605 8700 99	•	BUSHING	
PSR11	1	0603 4200 08	•	HEXAGON NIPPLE	
PSR11	1	0570 7017 29	•	BULKHEAD UNION	

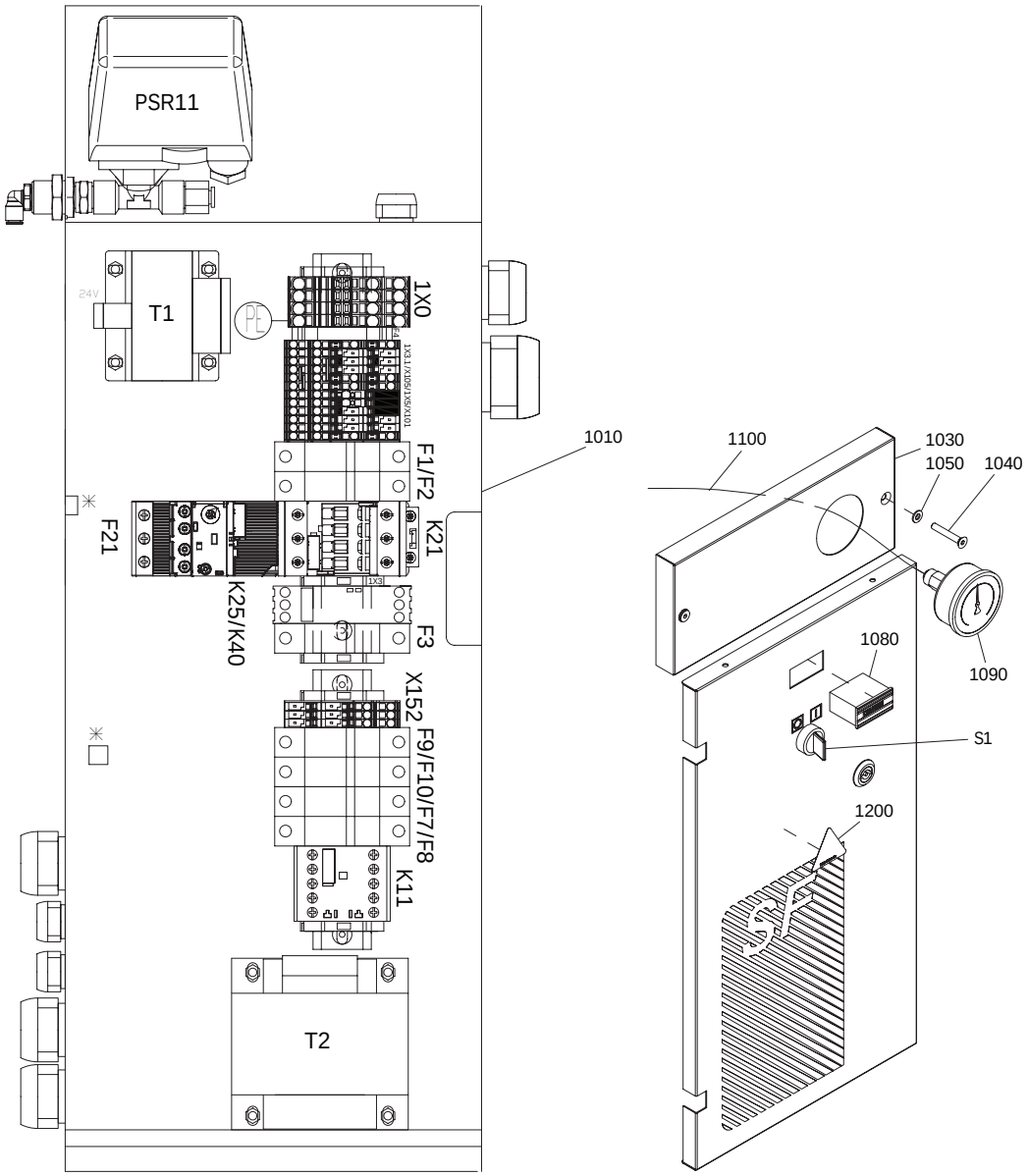

9820 6376 70-01ED00

Item No.	Qty.	Part Number		Description	Remarks
PSR11	1	9090 1519 00	•	ELBOW COUPLINGS	
PSR11	1	0583 8100 62	•	STRAIGHT COUPLING	
PSR11	1	0663 9031 00	•	O-RING	
L1-L2-L3 (1X0)					
	3		•	TERMINAL	
		1088 0038 25		9828 4504 10	
		1088 0038 25		9828 4504 11	
		1088 0038 26		9828 4504 15	
		1088 0038 26		9828 4504 16	
		1088 0038 26		9828 4504 17	
		1088 0038 26		9828 4504 20	
		1088 0038 26		9828 4504 21	
		1088 0038 26		9828 4504 22	
		1088 0038 26		9828 4504 25	
		1088 0038 26		9828 4504 26	
		1088 0038 26		9828 4504 27	
N (1X0)	1		•	TERMINAL	
		1088 0032 11		9828 4504 17	
		1088 0032 11		9828 4504 22	
		1088 0032 11		9828 4504 27	
L1-L2 (1X0)	2		•	TERMINAL	
		1088 0021 41		9828 4504 01	
		1088 0021 41		9828 4504 02	
		1088 0021 41		9828 4504 03	
		1088 0021 41		9828 4504 04	
(1X0)	1		•	END PLATE	
		1088 0021 43		9828 4504 01	
		1088 0021 43		9828 4504 02	
		1088 0021 43		9828 4504 03	
		1088 0021 43		9828 4504 04	
		1088 0039 37		9828 4504 10	
		1088 0039 37		9828 4504 11	
		1088 0039 40		9828 4504 15	
		1088 0039 40		9828 4504 16	
		1088 0039 40		9828 4504 17	
		1088 0039 40		9828 4504 20	
		1088 0039 40		9828 4504 21	
		1088 0039 40		9828 4504 22	
		1088 0039 40		9828 4504 25	
		1088 0039 40		9828 4504 26	
		1088 0039 40		9828 4504 27	
PE	1		•	EARTH TERMINAL	
		1088 0038 30		9828 4504 01	
		1088 0038 30		9828 4504 02	
		1088 0038 30		9828 4504 03	
		1088 0038 30		9828 4504 04	
		1088 0038 30		9828 4504 10	
		1088 0038 30		9828 4504 11	
		1088 0031 80		9828 4504 15	
		1088 0031 80		9828 4504 16	
		1088 0031 80		9828 4504 17	
		1088 0031 80		9828 4504 20	
		1088 0031 80		9828 4504 21	
		1088 0031 80		9828 4504 22	
		1088 0031 80		9828 4504 25	

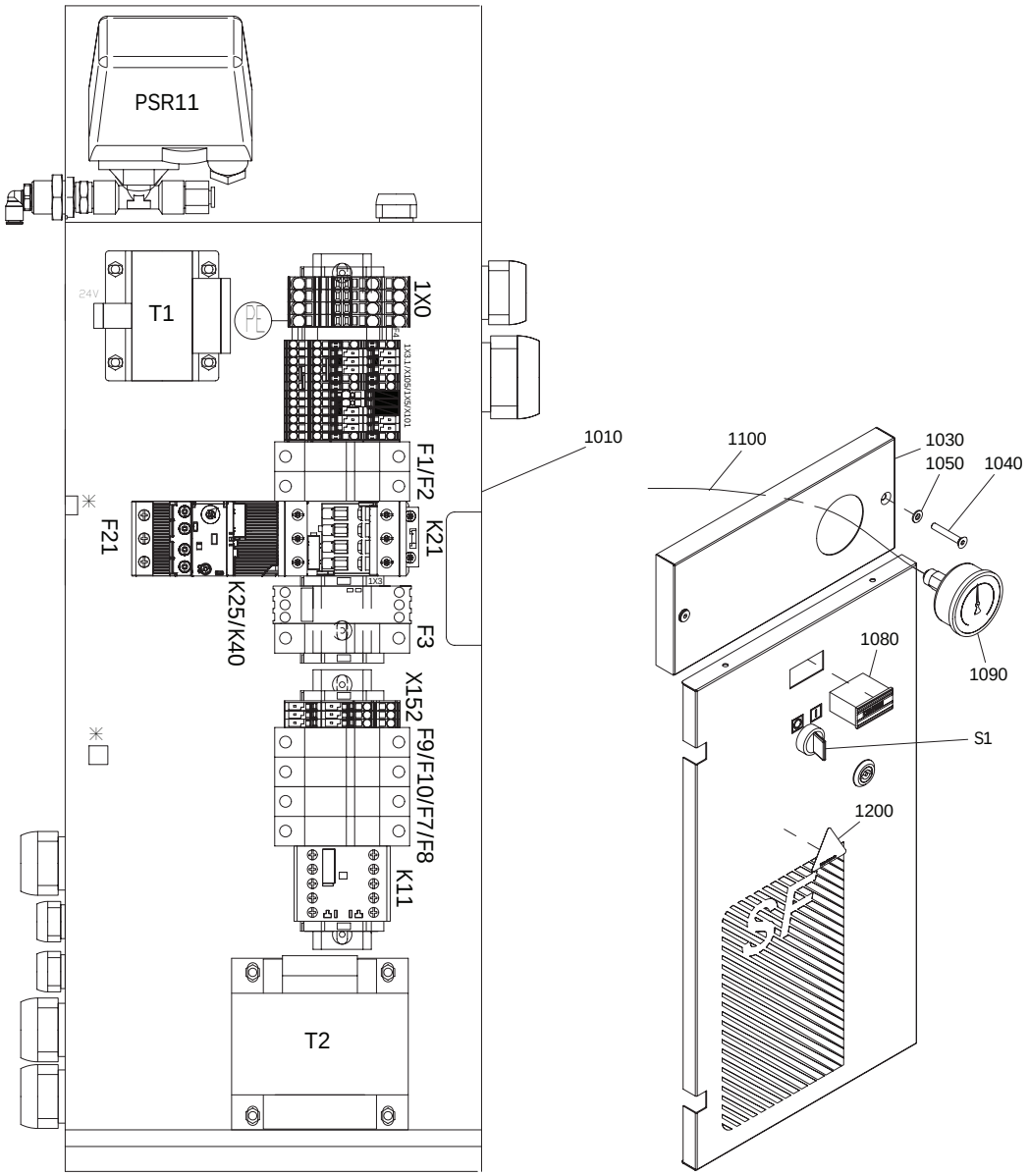
PSR11
T1
24V
PE
1X0
1X3 1X005 1X5X101
F1/F2
K21
F21
K25/K40
1X3
F3
X152
F9/F10/F7/F8
K11
T2
1010
1100
1030
1050
1040
1080
1090
S1
1200

Item No.	Qty.	Part Number		Description	Remarks
		1088 0031 80		9828 4504 26	
		1088 0031 80		9828 4504 27	
M1 EARTH CONNECTION BELOW K21 (1X3)					
	1		•	EARTH TERMINAL	
		1088 0061 08		9828 4504 01	
		1088 0061 08		9828 4504 02	
		1088 0061 08		9828 4504 03	
		1088 0061 08		9828 4504 04	
M1 EARTH CONNECTION BELOW K21 (1X3)					
	1		•	END PLATE	
		1088 0038 24		9828 4504 01	
		1088 0038 24		9828 4504 02	
		1088 0038 24		9828 4504 03	
		1088 0038 24		9828 4504 04	
1X3.1	1	1088 0035 03	•	EARTH TERMINAL	
X105	1	1088 0037 15	•	EARTH TERMINAL	
X105: 2-15	2	1088 0038 18	•	TERMINAL	
X105: 15-15	2	1088 0037 99	•	CODING PIN	
1X5: 2-15, 2-11					
	3	1088 0037 69	•	TERMINAL	
X101: EMPTY-14 / EMPTY-13 / EMPTY-L3 / EMPTY-4 / EMPTY-3					
	5	1088 0037 16	•	TERMINAL	
1X5: 17-18	1	1088 0037 69	•	TERMINAL	
X01	3	1088 0038 51	•	PIN COVER	
X101: 13-L3-4					
	3	1088 0037 99	•	CODING PIN	
1X5	1	1088 0035 02	•	END PLATE	
X105-1X2: 22		1088 0040 31	•	JUMPER BAR	
X105-1X2: 15					
	1	1088 0040 32	•	JUMPER BAR	
X101: 13-14	1	1088 0039 25	•	CONNECTOR	
X152	1		•	EARTH TERMINAL	
		1088 0037 15		9828 4504 02	
		1088 0037 15		9828 4504 04	
		1088 0037 15		9828 4504 11	
		1088 0037 15		9828 4504 16	
		1088 0037 15		9828 4504 17	
		1088 0037 15		9828 4504 21	
		1088 0037 15		9828 4504 22	
		1088 0037 15		9828 4504 26	
		1088 0037 15		9828 4504 27	
X152	2		•	TERMINAL	
		1088 0038 18		9828 4504 02	
		1088 0038 18		9828 4504 04	
		1088 0038 18		9828 4504 11	
		1088 0038 18		9828 4504 16	
		1088 0038 18		9828 4504 17	
		1088 0038 18		9828 4504 21	
		1088 0038 18		9828 4504 22	
		1088 0038 18		9828 4504 26	
		1088 0038 18		9828 4504 27	
X152	1		•	END PLATE	
		1088 0037 17		9828 4504 02	
		1088 0037 17		9828 4504 04	
		1088 0037 17		9828 4504 11	

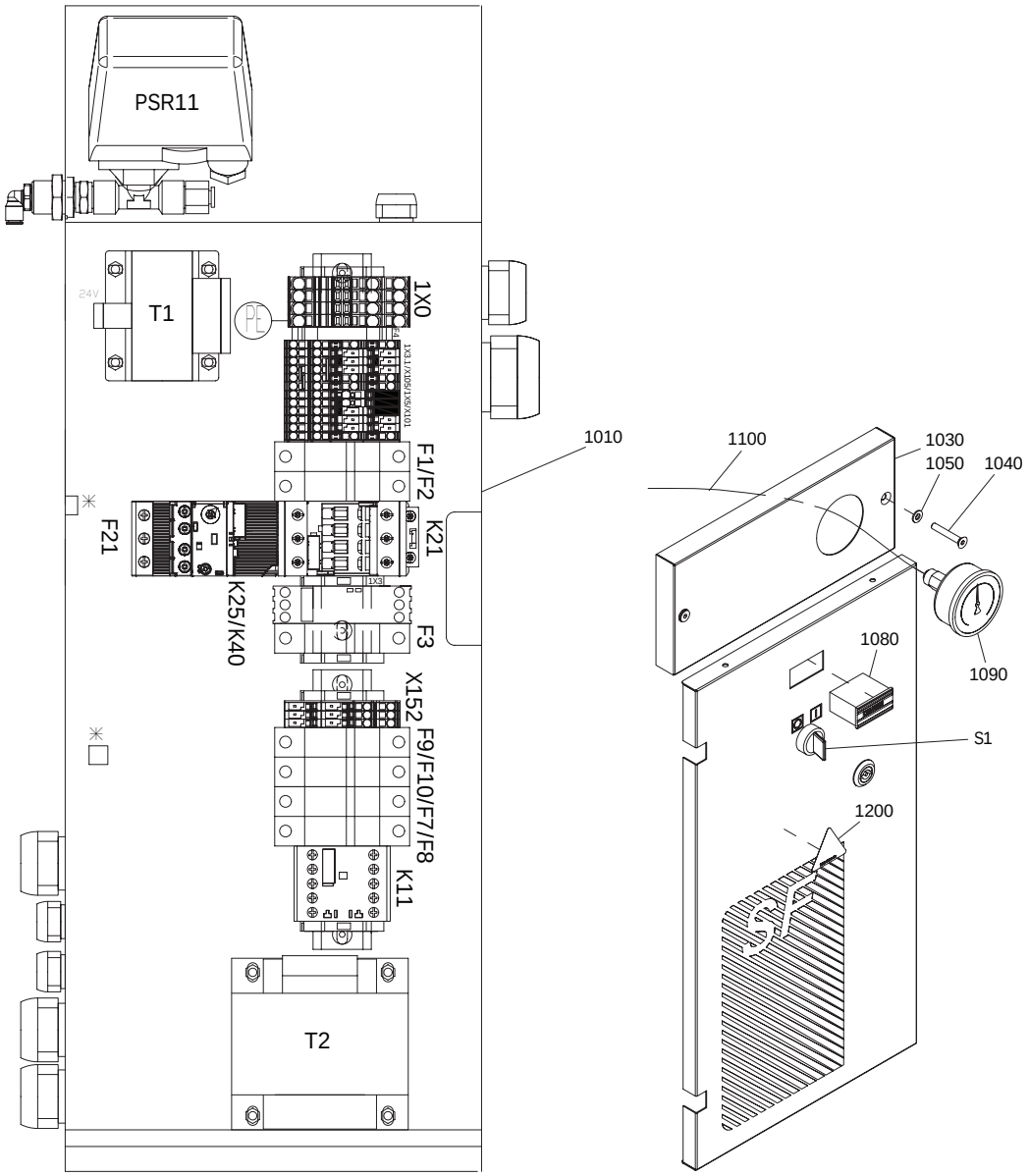
PSR11
T1
24V
PE
1X0
1X3 1X005 1X5X101
F1/F2
K21
F21
K25/K40
F3
X152
F9/F10/F7/F8
K11
T2
1010
1100
1030
1050
1040
1080
1090
S1
1200

Item No.	Qty.	Part Number		Description	Remarks
		1088 0037 17		9828 4504 16	
		1088 0037 17		9828 4504 17	
		1088 0037 17		9828 4504 21	
		1088 0037 17		9828 4504 22	
		1088 0037 17		9828 4504 26	
		1088 0037 17		9828 4504 27	
-	2	1088 0031 81	•	END STOP	
-	2		•	END STOP	
		1088 0031 81		9828 4504 02	
		1088 0031 81		9828 4504 04	
		1088 0031 81		9828 4504 11	
		1088 0031 81		9828 4504 16	
		1088 0031 81		9828 4504 17	
		1088 0031 81		9828 4504 21	
		1088 0031 81		9828 4504 22	
		1088 0031 81		9828 4504 26	
		1088 0031 81		9828 4504 27	
S1	1	1089 9513 43	•	SELECTOR SWITCH	
S1	1	1089 9513 28	•	CONTACT SUPPORT	
S1	1	1089 9513 33	•	1 NO CONTACT WITHOUT HOLDER	
S1	1	1089 9513 46	•	LAMP BLOCK	
S1	1	1089 9513 17	•	LAMP	
T1	1		•	CONTROL TRANSFORMER	
		2203 0504 01		9828 4504 01	
		2203 0504 01		9828 4504 02	
		2203 0504 01		9828 4504 03	
		2203 0504 01		9828 4504 04	
		2203 0504 01		9828 4504 10	
		2203 0504 01		9828 4504 11	
		2203 0503 01		9828 4504 15	
		2203 0503 01		9828 4504 16	
		2203 0503 01		9828 4504 17	
		2203 0503 01		9828 4504 20	
		2203 0503 01		9828 4504 21	
		2203 0503 01		9828 4504 22	
		2203 0503 01		9828 4504 25	
		2203 0503 01		9828 4504 26	
		2203 0503 01		9828 4504 27	
T2	1		•	POWER AUTOTRANSFORMER	
		2203 0505 01		9828 4504 16	
		2203 0505 01		9828 4504 21	
		2203 0505 01		9828 4504 26	
F1-F2	2		•	FUSE	
		1089 0612 23		9828 4504 01	
		1089 0612 23		9828 4504 02	
		1089 0612 23		9828 4504 03	
		1089 0612 23		9828 4504 04	
		1089 0612 23		9828 4504 10	
		1089 0612 23		9828 4504 11	
		1089 0612 22		9828 4504 15	
		1089 0612 22		9828 4504 16	
		1089 0612 22		9828 4504 17	
		1089 0612 22		9828 4504 20	
		1089 0612 22		9828 4504 21	
		1089 0612 22		9828 4504 22	

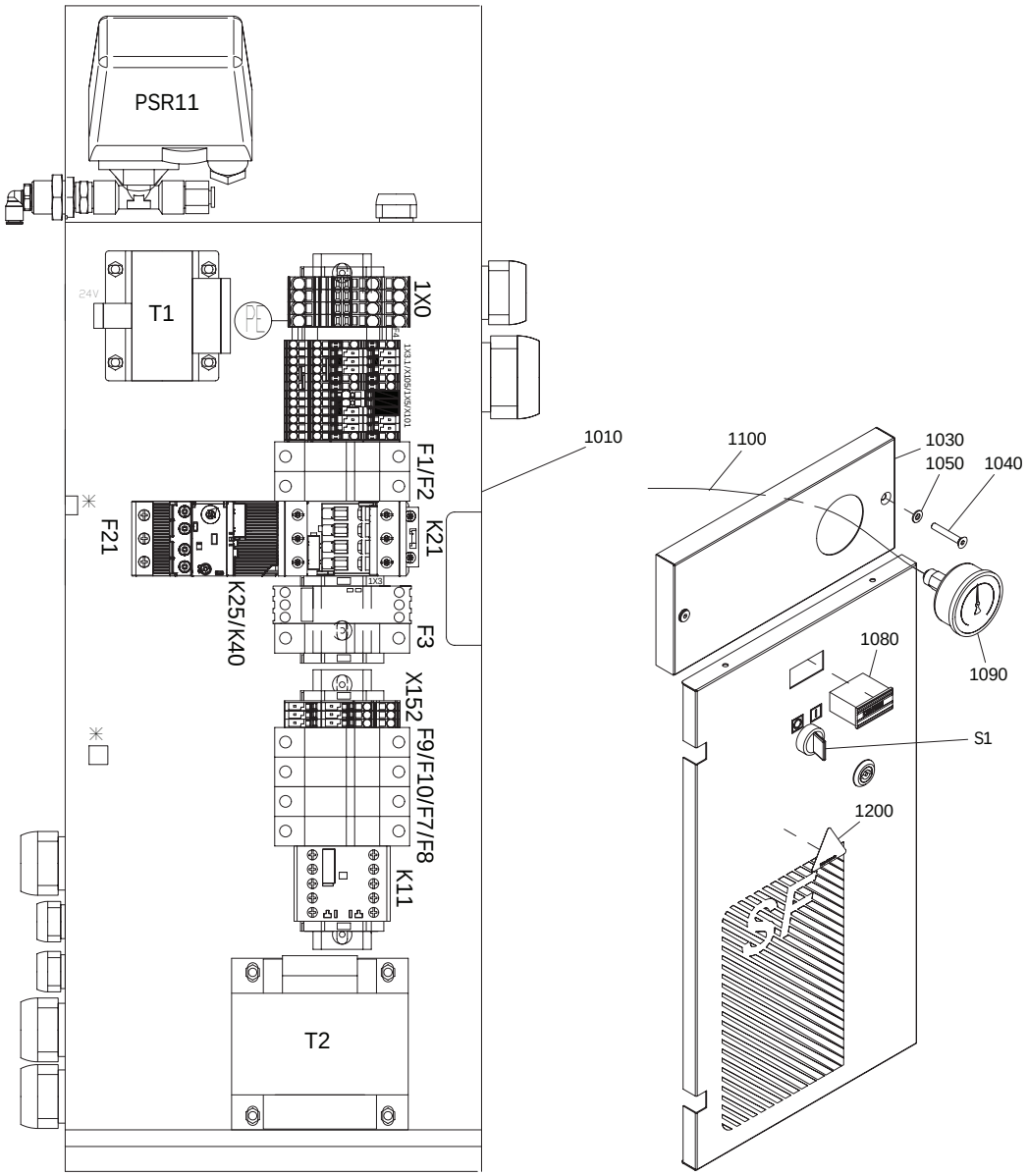
PSR11
T1
24V
PE
1X0
1X3 1X005 1X5X101
F1/F2
K21
F21
K25/K40
1X3
F3
X152
F9/F10/F7/F8
K11
T2
1010
1100
1030
1050
1040
1080
1090
S1
1200

Item No.	Qty.	Part Number		Description	Remarks
		1089 0612 22		9828 4504 25	
		1089 0612 22		9828 4504 26	
		1089 0612 22		9828 4504 27	
F4	1	1089 9037 18	•	FUSE	
F8	1		•	FUSE	
		1089 0612 24		9828 4504 17	
		1089 0612 24		9828 4504 22	
		1089 0612 24		9828 4504 27	
F7-F8	2		•	FUSE	
		1089 0612 24		9828 4504 02	
		1089 0612 24		9828 4504 04	
		1089 0612 24		9828 4504 11	
		1089 0612 25		9828 4504 16	
		1089 0612 25		9828 4504 21	
		1089 0612 25		9828 4504 26	
F9-F10	2		•	FUSE	
		1089 0612 24		9828 4504 16	
		1089 0612 24		9828 4504 21	
		1089 0612 24		9828 4504 26	
K11	1		•	CONTACTOR	
		1089 9602 18		9828 4504 02	
		1089 9602 18		9828 4504 04	
		1089 9602 18		9828 4504 11	
		1089 9602 18		9828 4504 16	
		1089 9602 18		9828 4504 17	
		1089 9602 18		9828 4504 21	
		1089 9602 18		9828 4504 22	
		1089 9602 18		9828 4504 26	
		1089 9602 18		9828 4504 27	
K21	1		•	CONTACTOR	
		1089 9602 28		9828 4504 01	
		1089 9602 28		9828 4504 02	
		1089 9602 28		9828 4504 03	
		1089 9602 28		9828 4504 04	
		1089 9602 29		9828 4504 10	
		1089 9602 29		9828 4504 11	
		1089 9602 18		9828 4504 15	
		1089 9602 18		9828 4504 16	
		1089 9602 18		9828 4504 17	
		1089 9602 20		9828 4504 20	
		1089 9602 20		9828 4504 21	
		1089 9602 20		9828 4504 22	
		1089 9602 28		9828 4504 25	
		1089 9602 28		9828 4504 26	
		1089 9602 28		9828 4504 27	
F21	1		•	OVERLOAD RELAY	
		1089 9512 54		9828 4504 01	
		1089 9512 54		9828 4504 02	
		1089 9512 56		9828 4504 03	
		1089 9512 56		9828 4504 04	
		1089 9512 70		9828 4504 10	
		1089 9512 70		9828 4504 11	
		1089 9512 63		9828 4504 15	
		1089 9512 63		9828 4504 16	
		1089 9512 63		9828 4504 17	

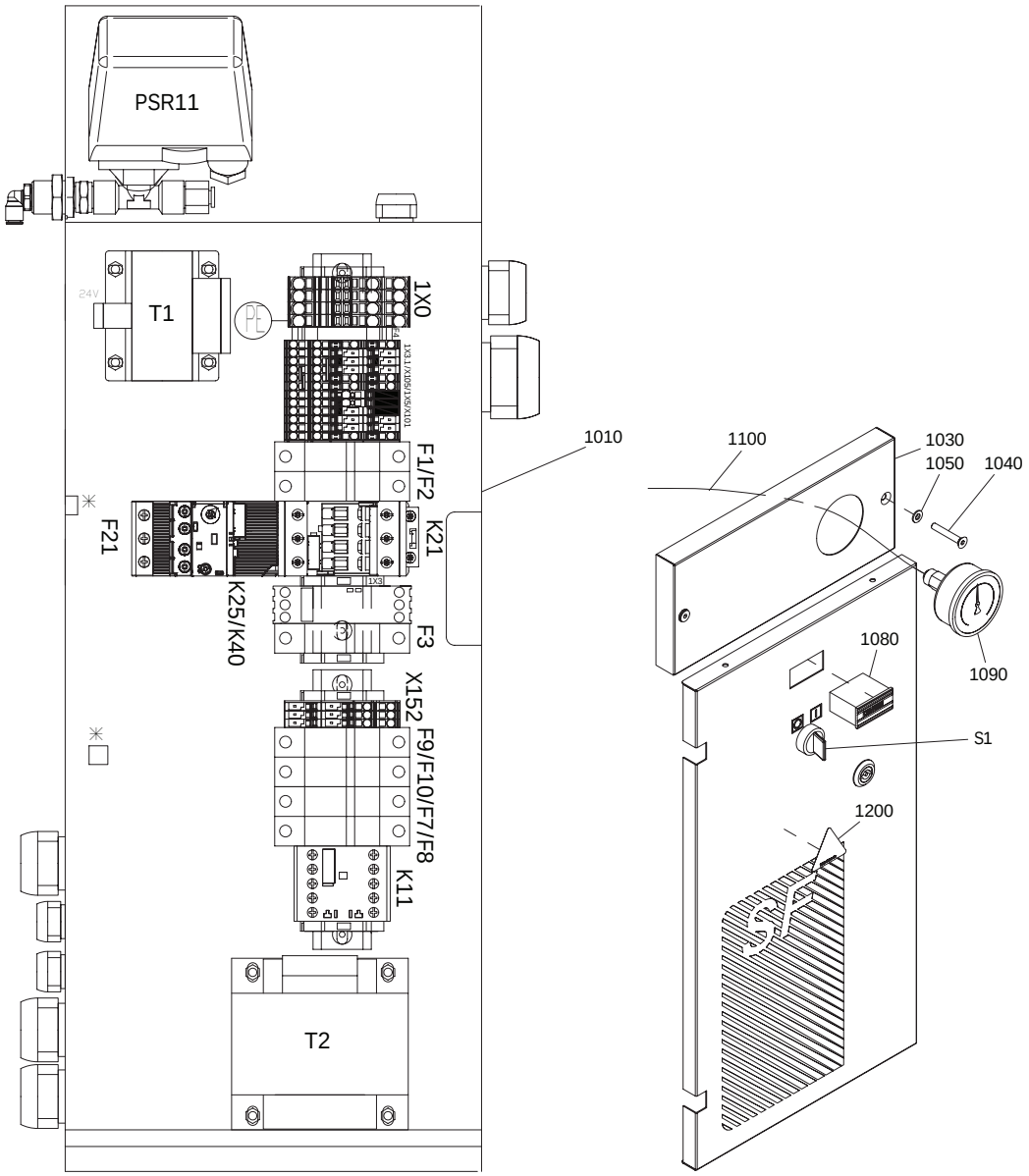
PSR11
T1
24V
PE
1X0
1X3 1X005 1X5X101
F1/F2
K21
F21
K25/K40
1X3
F3
X152
F9/F10/F7/F8
K11
T2
1010
1100
1030
1050
1040
1080
1090
S1
1200

Item No.	Qty.	Part Number		Description	Remarks
		1089 9512 65		9828 4504 20	
		1089 9512 65		9828 4504 21	
		1089 9512 65		9828 4504 22	
		1089 9512 54		9828 4504 25	
		1089 9512 54		9828 4504 26	
		1089 9512 54		9828 4504 27	
F1-F2	1	1089 9594 02	•	FUSE HOLDER	
F4	1	1089 0506 78	•	FUSE HOLDER	
F4	1	1089 0506 79	•	END PLATE	
F8	1		•	FUSE HOLDER	
		1089 9594 01		9828 4504 17	
		1089 9594 01		9828 4504 22	
		1089 9594 01		9828 4504 27	
F7-F8	1		•	FUSE HOLDER	
		1089 9594 02		9828 4504 02	
		1089 9594 02		9828 4504 04	
		1089 9594 02		9828 4504 11	
		1089 9594 02		9828 4504 16	
		1089 9594 02		9828 4504 21	
		1089 9594 02		9828 4504 26	
F9-F10					
	1		•	FUSE HOLDER	
		1089 9594 02		9828 4504 16	
		1089 9594 02		9828 4504 21	
		1089 9594 02		9828 4504 26	
-	1	0993 7106 29	•	DIN RAIL 35X7,5MM L=230MM	
-	1		•	DIN RAIL 35X7,5MM L=168MM	
		0993 7106 29		9828 4504 02	
		0993 7106 29		9828 4504 04	
		0993 7106 29		9828 4504 11	
		0993 7106 29		9828 4504 16	
		0993 7106 29		9828 4504 17	
		0993 7106 29		9828 4504 21	
		0993 7106 29		9828 4504 22	
		0993 7106 29		9828 4504 26	
		0993 7106 29		9828 4504 27	
-	1	2203 0527 00	•	DATA PLATE	
-	1	1089 9154 02	•	KEY	
1010	1	2203 0335 80	•	CUBICLE	
1020	7	0129 3270 38		RIVET	
1030	1	2203 0376 03		CUBICLE TOP	
1040	2	0216 1957 75		SCREW	
1050	2	2202 9392 01		WASHER	
1080	1	1089 0642 41		HOURMETER	
1090	1	9090 0239 00		PRESSURE GAUGE	
1100	AR	0070 7250 04		PLASTIC TUBE	
1200	1	1088 1001 02		WARNING MARK	

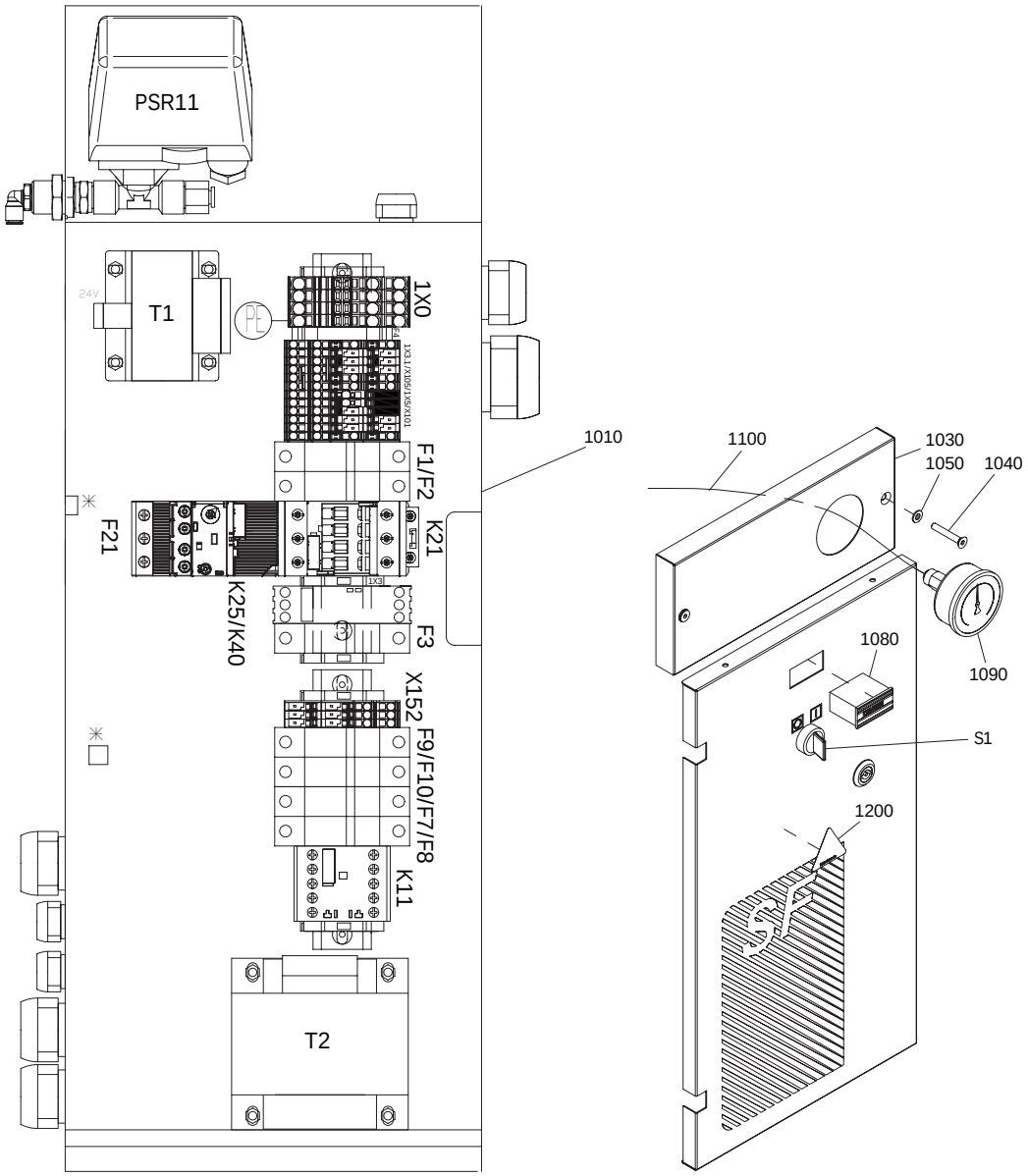

9820 6376 70-01ED00

Item No.	Qty.	Part Number		Description	Remarks
	1			**CUBICLE**	
		9828 4504 30		QOF 2 230V/60HZ 1PH PACK UL-CUL	
		9828 4504 40		QOF 3 200V/60HZ 3PH PACK UL-CUL	
		9828 4504 40		QOF 3 230V/60HZ 3PH PACK UL-CUL	
		9828 4504 40		QOF 3 4600V/60HZ 3PH PACK UL-CUL	
		9828 4504 45		QOF 5 200V/60HZ 3PH PACK UL-CUL	
		9828 4504 45		QOF 5 230V/60HZ 3PH PACK UL-CUL	
		9828 4504 45		QOF 5 4600V/60HZ 3PH PACK UL-CUL	
		9828 4504 50		QOF 7.5 200V/60HZ 3PH PACK UL-CUL	
		9828 4504 50		QOF 7.5 230V/60HZ 3PH PACK UL-CUL	
		9828 4504 50		QOF 7.5 4600V/60HZ 3PH PACK UL-CUL	
		9828 4504 31		QOF 2 230V/60HZ 1PH W/DRYER UL-CUL	
		9828 4504 41		QOF 3 200V/60HZ 3PH W/DRYER UL-CUL	
		9828 4504 41		QOF 3 230V/60HZ 3PH W/DRYER UL-CUL	
		9828 4504 41		QOF 3 4600V/60HZ 3PH W/DRYER UL-CUL	
		9828 4504 46		QOF 5 200V/60HZ 3PH W/DRYER UL-CUL	
		9828 4504 46		QOF 5 230V/60HZ 3PH W/DRYER UL-CUL	
		9828 4504 46		QOF 5 4600V/60HZ 3PH W/DRYER UL-CUL	
		9828 4504 51		QOF 7.5 200V/60HZ 3PH W/DRYER UL-CUL	
		9828 4504 51		QOF 7.5 230V/60HZ 3PH W/DRYER UL-CUL	
		9828 4504 51		QOF 7.5 4600V/60HZ 3PH W/DRYER UL-CUL	
		9828 4504 32		QOF 3 230V/60HZ 1PH PACK UL-CUL	
		9828 4504 33		QOF 3 230V/60HZ 1PH W/DRYER UL-CUL	
WH PSR11	1	9828 4504 70	•	WIRE HARNESS	
WH TSHH11	1	9828 4504 71	•	WIRE HARNESS	
WH M1	1		•	WIRE HARNESS	
		9828 4504 74		9828 4504 40	
		9828 4504 74		9828 4504 41	
		9828 4504 76		9828 4504 45	
		9828 4504 76		9828 4504 46	
		9828 4504 77		9828 4504 50	
		9828 4504 77		9828 4504 51	
WH POWER SUPPLY					
	1		•	WIRE HARNESS	
		9828 4504 84		9828 4504 30	
		9828 4504 84		9828 4504 31	
		9828 4504 84		9828 4504 32	
		9828 4504 84		9828 4504 33	
		9828 4504 87		9828 4504 40	
		9828 4504 87		9828 4504 41	
		9828 4504 88		9828 4504 45	
		9828 4504 88		9828 4504 46	
		9828 4504 89		9828 4504 50	
		9828 4504 89		9828 4504 51	
WH Y3	1		•	WIRE HARNESS	
		9828 4505 88		9828 4504 30	
		9828 4505 88		9828 4504 31	
		9828 4505 88		9828 4504 32	
		9828 4505 88		9828 4504 33	
K40	1		•	MODULE UNLOAD STARTER	
		9828 4505 75		9828 4504 30	
		9828 4505 75		9828 4504 31	
		9828 4505 75		9828 4504 32	
		9828 4505 75		9828 4504 33	
AD	0	9828 4504 97	•	INSTRUCTION ASSEMBLY TERMINAL BLOCK	

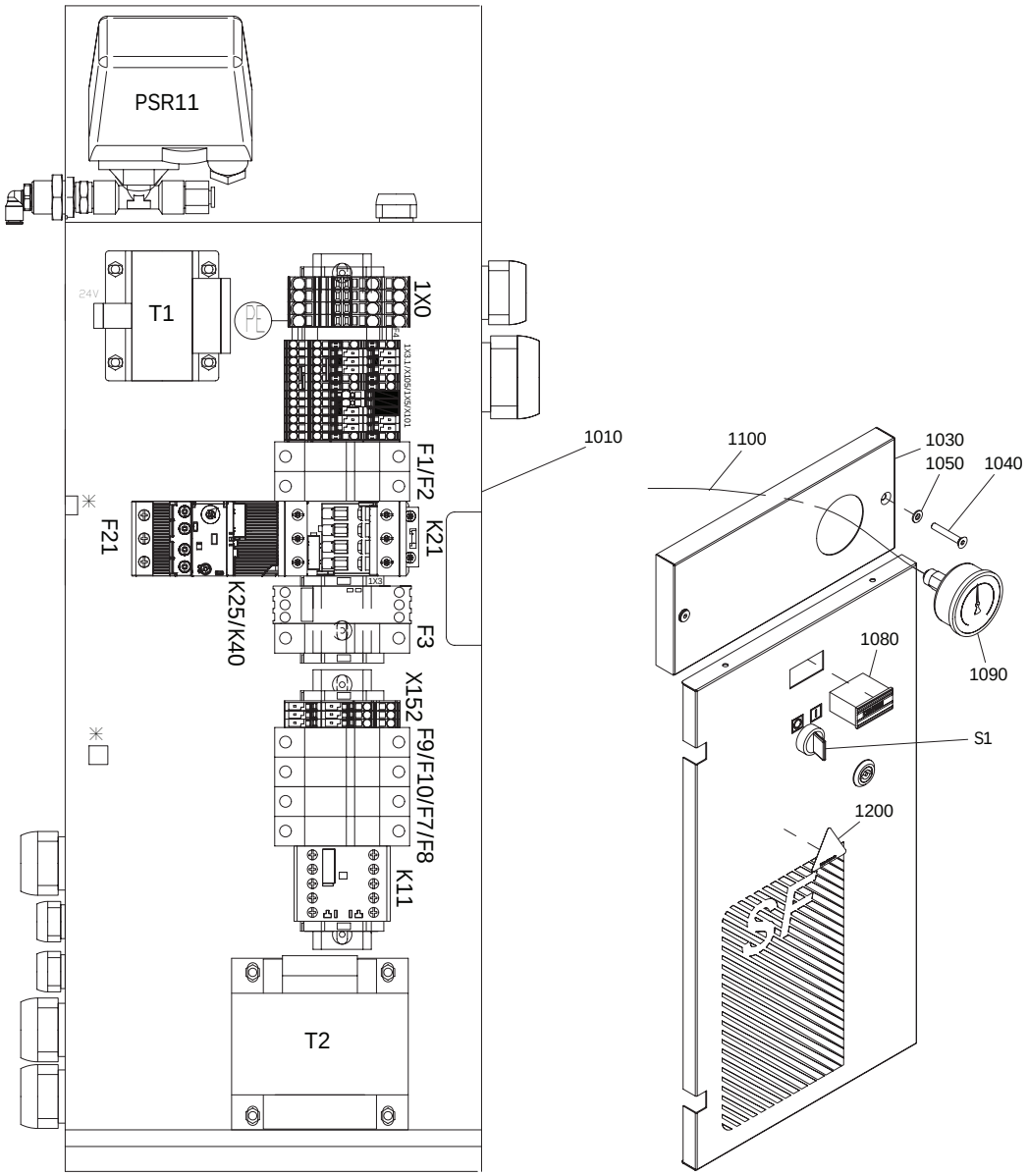

9820 6376 70-01ED00

Item No.	Qty.	Part Number		Description	Remarks
SD	1	9828 4504 99	•	SERVICE DIAGRAM	
AD	0	9828 4504 90	•	ASSEMBLY DRAWING CUBICLE	
AD	0			ASSEMBLY DRAWING PRESSURE SWITCH (PSR11)	
		9828 4504 98		9828 4504 30	
		9828 4504 98		9828 4504 31	
		9828 4504 98		9828 4504 32	
		9828 4504 98		9828 4504 33	
-	-	-	•	POWER INTERNAL WIRING	
-	-	-	•	CONTROL INTERNAL WIRING	
T1 GROUNDING					
	1	0694 5285 14	•	RECEPTACLE	
DOOR GROUNDING					
	1	0694 5285 14	•	RECEPTACLE	
SCREWS FOR T1					
	4	0160 0996 13	•	CROSS REC SCREW	
T2 GROUNDING					
	1		•	RECEPTACLE	
		0694 5285 14		9828 4504 41	
		0694 5285 14		9828 4504 46	
		0694 5285 14		9828 4504 51	
SCREWS FOR T2					
	4		•	SCREW	
		0160 0996 17		9828 4504 41	
		0160 0996 17		9828 4504 46	
		0160 0996 17		9828 4504 51	
P1	2	1088 0003 24	•	CABLE LUG	
-	AR	1202 6584 00	•	SEAL	
SUPPLY	1		•	CABLE GLAND	
		0698 5141 20		9828 4504 30	
		0698 5141 20		9828 4504 31	
		0698 5141 20		9828 4504 32	
		0698 5141 20		9828 4504 33	
		0698 5141 20		9828 4504 40	
		0698 5141 20		9828 4504 41	
		0698 5141 20		9828 4504 45	
		0698 5141 20		9828 4504 46	
		0698 5141 27		9828 4504 50	
		0698 5141 27		9828 4504 51	
SUPPLY	1		•	NUT	
		0697 9809 51		9828 4504 30	
		0697 9809 51		9828 4504 31	
		0697 9809 51		9828 4504 32	
		0697 9809 51		9828 4504 33	
		0697 9809 51		9828 4504 40	
		0697 9809 51		9828 4504 41	
		0697 9809 51		9828 4504 45	
		0697 9809 51		9828 4504 46	
		0697 9809 51		9828 4504 50	
		0697 9809 51		9828 4504 51	
SUPPLY	1		•	END PLUG	
		0697 9810 36		9828 4504 30	
		0697 9810 36		9828 4504 31	
		0697 9810 36		9828 4504 32	
		0697 9810 36		9828 4504 33	
		0697 9810 36		9828 4504 40	

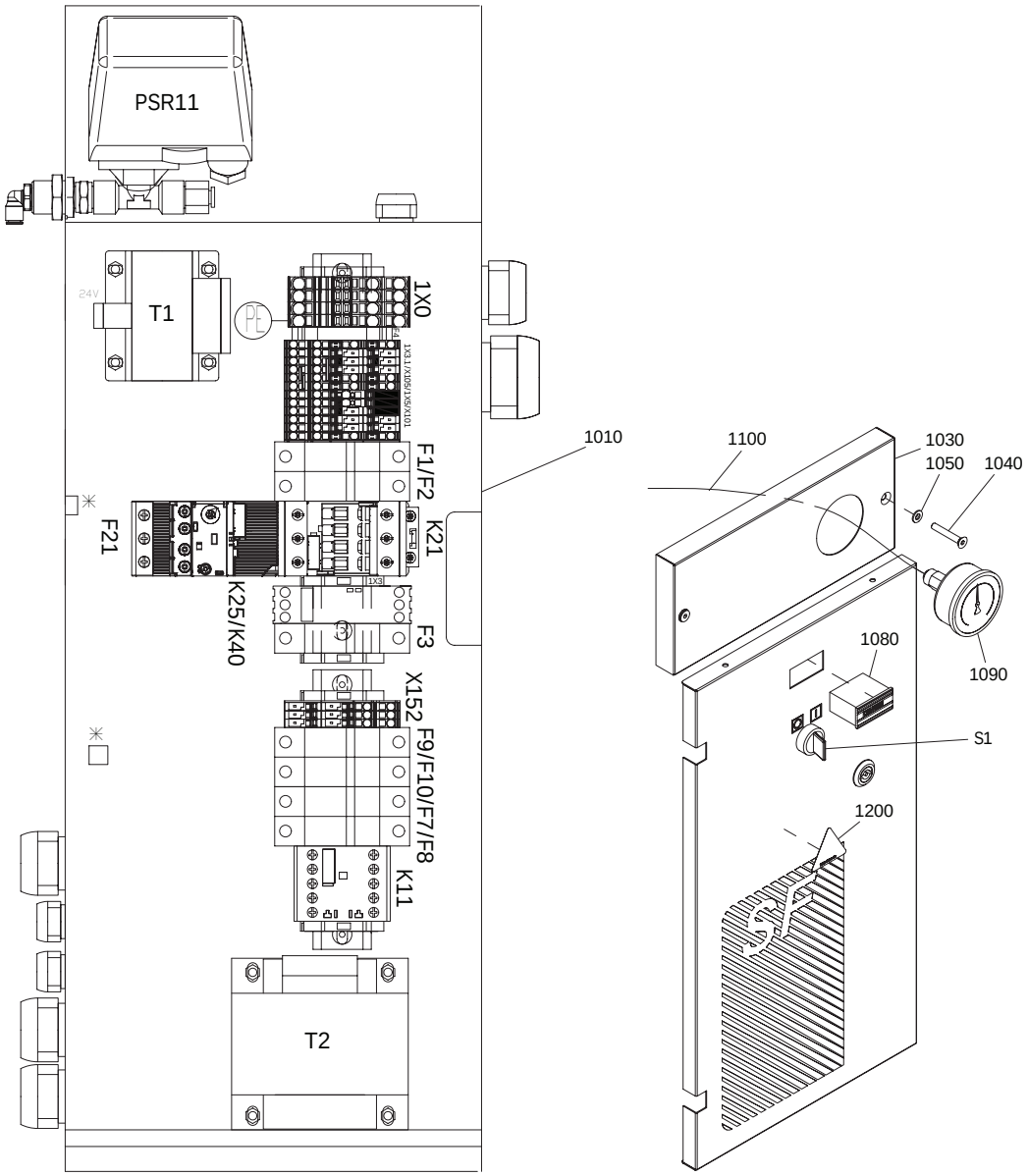

9820 6376 70-01ED00

Item No.	Qty.	Part Number		Description	Remarks
		0697 9810 36		9828 4504 41	
		0697 9810 36		9828 4504 45	
		0697 9810 36		9828 4504 46	
		0697 9810 36		9828 4504 50	
		0697 9810 36		9828 4504 51	
SUPPLY	1		•	LOCK NUT	
		0697 9809 03		9828 4504 30	
		0697 9809 03		9828 4504 31	
		0697 9809 03		9828 4504 32	
		0697 9809 03		9828 4504 33	
		0697 9809 03		9828 4504 40	
		0697 9809 03		9828 4504 41	
		0697 9809 03		9828 4504 45	
		0697 9809 03		9828 4504 46	
		0697 9809 03		9828 4504 50	
		0697 9809 03		9828 4504 51	
M1 (CUBICLE SIDE)					
	1		•	CABLE GLAND	
		0698 5141 17		9828 4504 30	
		0698 5141 17		9828 4504 31	
		0698 5141 17		9828 4504 32	
		0698 5141 17		9828 4504 33	
M1 (CUBICLE SIDE)					
	1		•	NUT	
		0697 9809 54		9828 4504 30	
		0697 9809 54		9828 4504 31	
		0697 9809 54		9828 4504 32	
		0697 9809 54		9828 4504 33	
-	2	0348 0102 23	•	CABLE TIE	
PSR11	1	1089 0389 53	•	PRESSURE SWITCH	
PSR11	1	9090 1508 00	•	STRAIGHT COUPLING	
PSR11	1	9740 2027 22	•	BRANCH TEE BODY	
PSR11	1	0605 8700 99	•	BUSHING	
PSR11	1	0603 4200 08	•	HEXAGON NIPPLE	
PSR11	1	0570 7017 29	•	BULKHEAD UNION	
PSR11	1	9090 1519 00	•	ELBOW COUPLINGS	
PSR11	1	0583 8100 62	•	STRAIGHT COUPLING	
PSR11	1	0663 9031 00	•	O-RING	
L1-L2-L3 (1X0)					
	3		•	TERMINAL	
		1088 0038 26		9828 4504 40	
		1088 0038 26		9828 4504 41	
		1088 0038 25		9828 4504 45	
		1088 0038 25		9828 4504 46	
		1088 0061 21		9828 4504 50	
		1088 0061 21		9828 4504 51	
L1-L2 (1X0)	2		•	TERMINAL	
		1088 0021 41		9828 4504 30	
		1088 0021 41		9828 4504 31	
		1088 0021 41		9828 4504 32	
		1088 0021 41		9828 4504 33	
(1X0)	1		•	END PLATE	
		1088 0021 43		9828 4504 30	
		1088 0021 43		9828 4504 31	
		1088 0021 43		9828 4504 32	

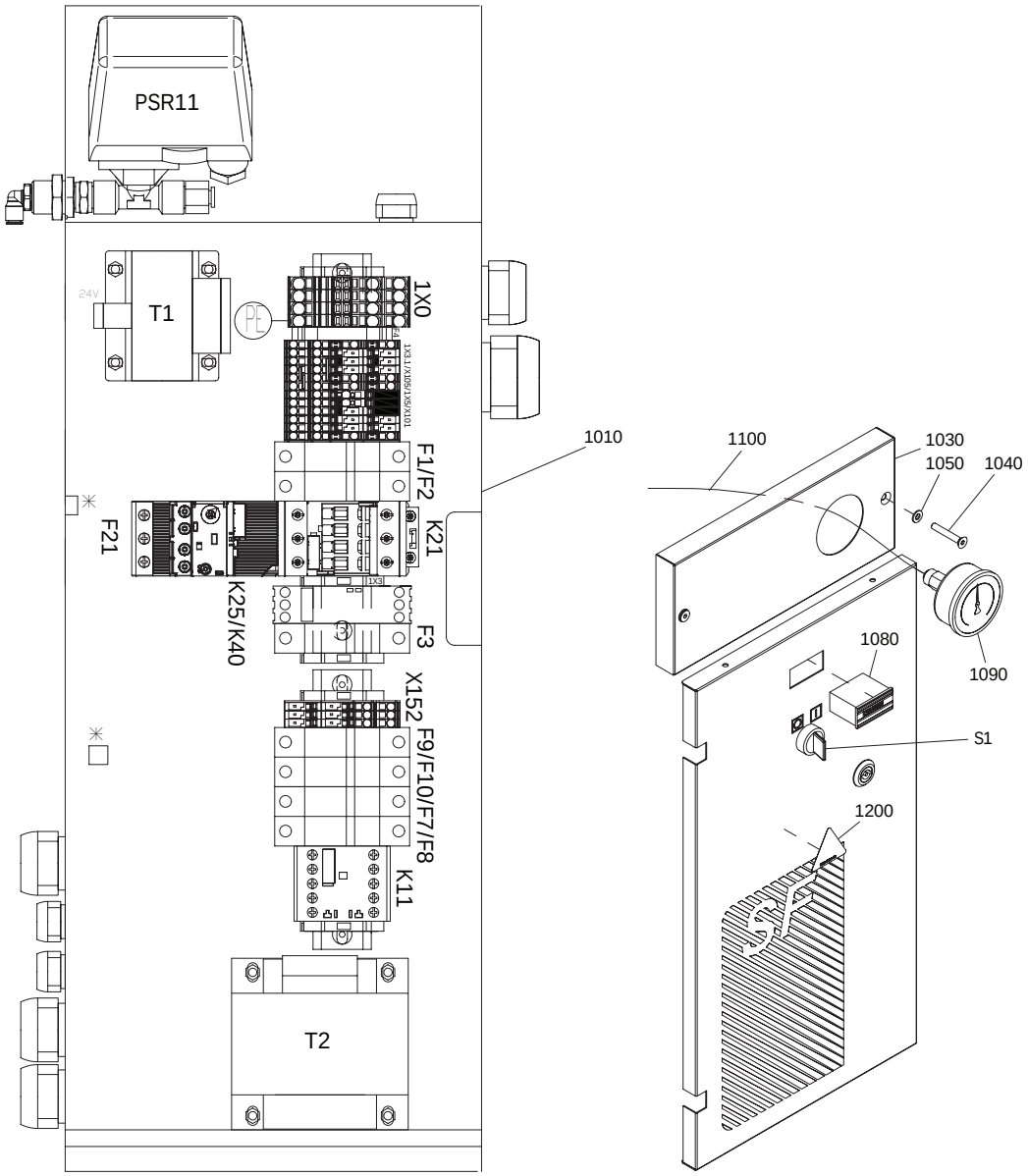

9820 6376 70-01ED00

Item No.	Qty.	Part Number		Description	Remarks
		1088 0021 43		9828 4504 33	
		1088 0039 40		9828 4504 40	
		1088 0039 40		9828 4504 41	
		1088 0039 37		9828 4504 45	
		1088 0039 37		9828 4504 46	
		1088 0061 23		9828 4504 50	
		1088 0061 23		9828 4504 51	
PE	1		•	EARTH TERMINAL	
		1088 0038 30		9828 4504 30	
		1088 0038 30		9828 4504 31	
		1088 0038 30		9828 4504 32	
		1088 0038 30		9828 4504 33	
		1088 0031 80		9828 4504 40	
		1088 0031 80		9828 4504 41	
		1088 0038 30		9828 4504 45	
		1088 0038 30		9828 4504 46	
		1088 0061 22		9828 4504 50	
		1088 0061 22		9828 4504 51	
M1 EARTH CONNECTION BELOW K21 (1X3)					
	1		•	EARTH TERMINAL	
		1088 0061 08		9828 4504 30	
		1088 0061 08		9828 4504 31	
		1088 0061 08		9828 4504 32	
		1088 0061 08		9828 4504 33	
M1 EARTH CONNECTION BELOW K21 (1X3)					
	1		•	END PLATE	
		1088 0038 24		9828 4504 30	
		1088 0038 24		9828 4504 31	
		1088 0038 24		9828 4504 32	
		1088 0038 24		9828 4504 33	
1X3.1	1	1088 0035 03	•	EARTH TERMINAL	
X105	1	1088 0037 15	•	EARTH TERMINAL	
X105: 2-15	2	1088 0038 18	•	TERMINAL	
X105: 15-15	2	1088 0037 99	•	CODING PIN	
1X5: 2-15, 2-11					
	3	1088 0037 69	•	TERMINAL	
X101: EMPTY-14 / EMPTY-13 / EMPTY-L3 / EMPTY-4 / EMPTY-3					
	5	1088 0037 16	•	TERMINAL	
1X5: 17-18	1	1088 0037 69	•	TERMINAL	
X01	3	1088 0038 51	•	PIN COVER	
X101: 13-L3-4					
	3	1088 0037 99	•	CODING PIN	
1X5	1	1088 0035 02	•	END PLATE	
X105-1X2: 22		1088 0040 31	•	JUMPER BAR	
X105-1X2: 15					
	1	1088 0040 32	•	JUMPER BAR	
X101: 13-14	1	1088 0039 25	•	CONNECTOR	
X152	1		•	EARTH TERMINAL	
		1088 0037 15		9828 4504 31	
		1088 0037 15		9828 4504 33	
		1088 0037 15		9828 4504 41	
		1088 0037 15		9828 4504 46	
		1088 0037 15		9828 4504 51	
X152	2		•	TERMINAL	
		1088 0038 18		9828 4504 31	

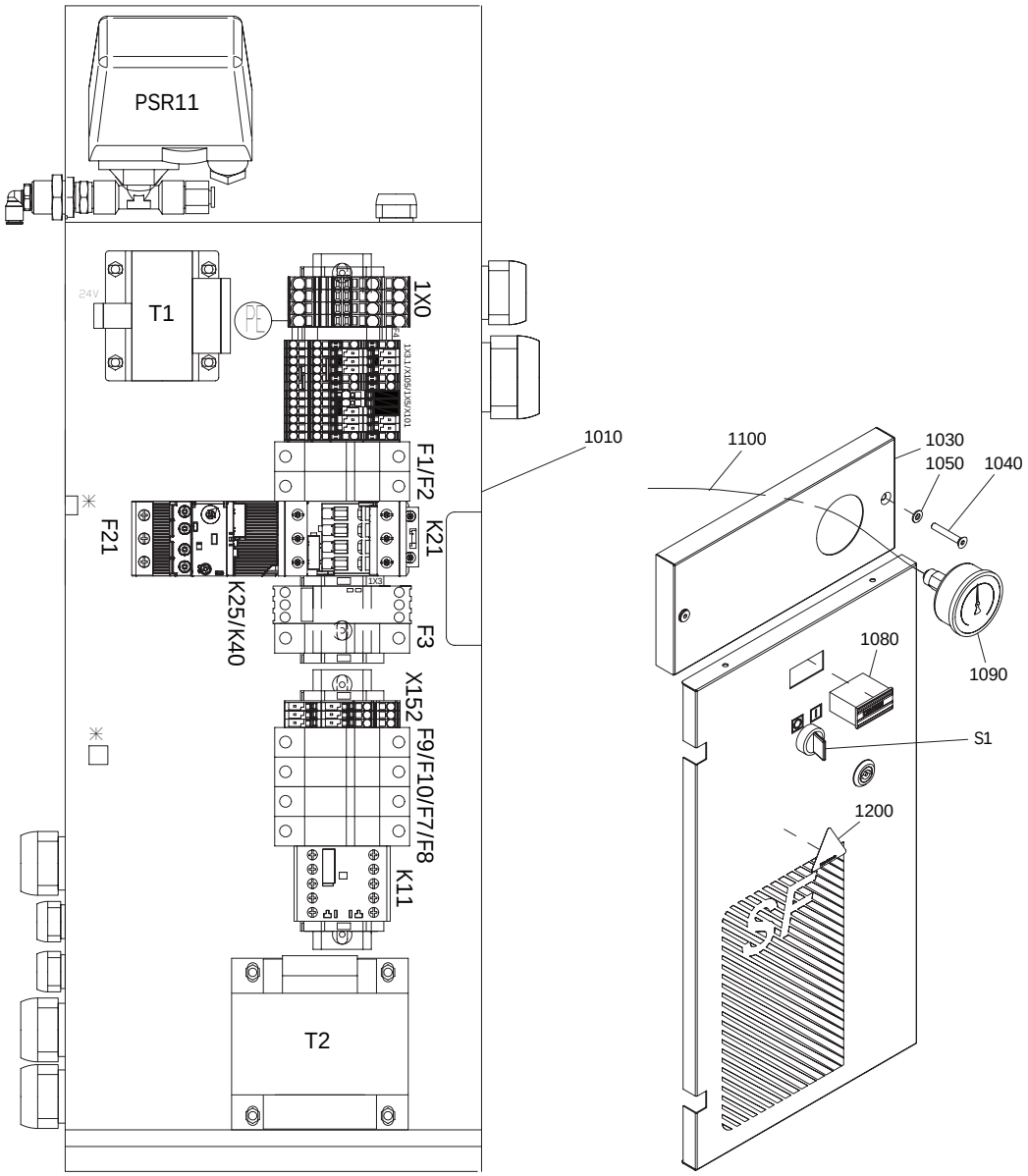

9820 6376 70-01ED00

Item No.	Qty.	Part Number		Description	Remarks
		1088 0038 18		9828 4504 33	
		1088 0038 18		9828 4504 41	
		1088 0038 18		9828 4504 46	
		1088 0038 18		9828 4504 51	
X152	1		•	END PLATE	
		1088 0037 17		9828 4504 31	
		1088 0037 17		9828 4504 33	
		1088 0037 17		9828 4504 41	
		1088 0037 17		9828 4504 46	
		1088 0037 17		9828 4504 51	
-	2	1088 0031 81	•	END STOP	
-	2		•	END STOP	
		1088 0031 81		9828 4504 31	
		1088 0031 81		9828 4504 33	
		1088 0031 81		9828 4504 41	
		1088 0031 81		9828 4504 46	
		1088 0031 81		9828 4504 51	
S1	1	1089 9513 43	•	SELECTOR SWITCH	
S1	1	1089 9513 28	•	CONTACT SUPPORT	
S1	1	1089 9513 33	•	1 NO CONTACT WITHOUT HOLDER	
S1	1	1089 9513 46	•	LAMP BLOCK	
S1	1	1089 9513 17	•	LAMP	
T1	1	2203 0504 01	•	CONTROL TRANQOFORMER	
T2	1		•	POWER AUTOTRANQOFORMER	
		2203 0506 01		9828 4504 41	
		2203 0506 01		9828 4504 46	
		2203 0506 01		9828 4504 51	
F1-F2	2		•	FUSE	
		1089 9168 48		9828 4504 30	
		1089 9168 48		9828 4504 31	
		1089 9168 48		9828 4504 32	
		1089 9168 48		9828 4504 33	
		1089 9168 48		9828 4504 40	
		1089 9168 48		9828 4504 41	
		1089 9168 48		9828 4504 45	
		1089 9168 48		9828 4504 46	
		1089 9168 48		9828 4504 50	
		1089 9168 48		9828 4504 51	
F1-F2 LOOSE					
	2		•	FUSE	
		1089 9168 47		9828 4504 40	
		1089 9168 47		9828 4504 41	
		1089 9168 47		9828 4504 45	
		1089 9168 47		9828 4504 46	
		1089 9168 47		9828 4504 50	
		1089 9168 47		9828 4504 51	
F4	1	1089 9168 79	•	FUSE	
F7-F8	2		•	FUSE	
		1089 9168 26		9828 4504 31	
		1089 9168 26		9828 4504 33	
		1089 9168 27		9828 4504 41	
		1089 9168 27		9828 4504 46	
		1089 9168 27		9828 4504 51	
F7-F8 LOOSE					
	2		•	FUSE	

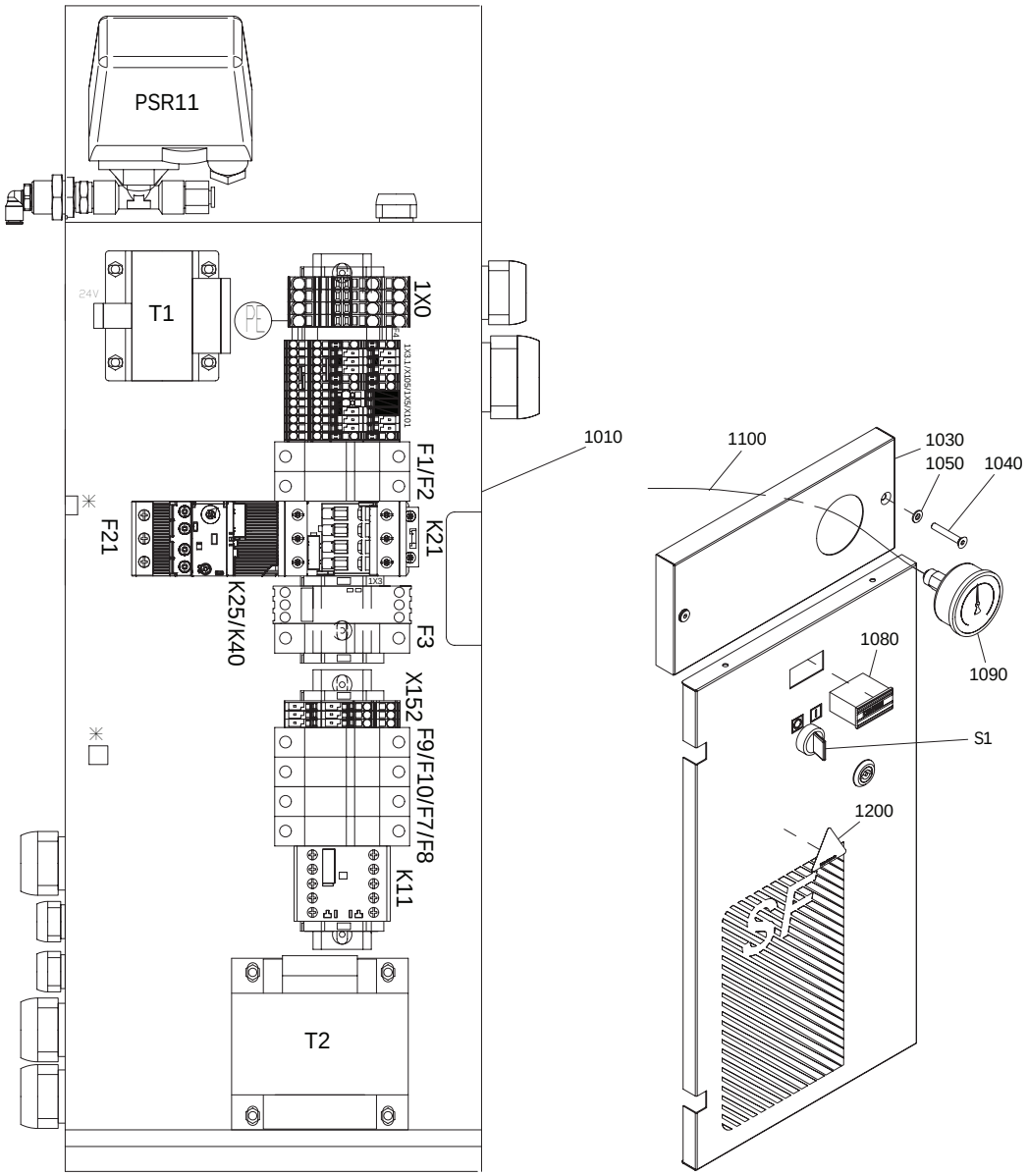

9820 6376 70-01ED00

Item No.	Qty.	Part Number		Description	Remarks
		1089 9168 24		9828 4504 41	
		1089 9168 24		9828 4504 46	
		1089 9168 24		9828 4504 51	
F9-F10	2		•	FUSE	
		1089 9168 85		9828 4504 41	
		1089 9168 85		9828 4504 46	
		1089 9168 85		9828 4504 51	
-	1		•	DECAL FUSES TRIVOLTAGES	
		2203 0522 00		9828 4504 40	
		2203 0522 00		9828 4504 41	
		2203 0522 00		9828 4504 45	
		2203 0522 00		9828 4504 46	
		2203 0522 00		9828 4504 50	
		2203 0522 00		9828 4504 51	
-	1		•	DECAL FUSES 230V SINGLE PHASE	
		2203 0522 20		9828 4504 30	
		2203 0522 20		9828 4504 31	
		2203 0522 20		9828 4504 32	
		2203 0522 20		9828 4504 33	
K11	1		•	CONTACTOR	
		1089 9602 18		9828 4504 31	
		1089 9602 18		9828 4504 33	
		1089 9602 18		9828 4504 41	
		1089 9602 18		9828 4504 46	
		1089 9602 18		9828 4504 51	
K21	1		•	CONTACTOR	
		1089 9602 28		9828 4504 30	
		1089 9602 28		9828 4504 31	
		1089 9602 28		9828 4504 32	
		1089 9602 28		9828 4504 33	
		1089 9415 27		9828 4504 40	
		1089 9415 27		9828 4504 41	
		1089 9602 29		9828 4504 45	
		1089 9602 29		9828 4504 46	
		1089 9602 38		9828 4504 50	
		1089 9602 38		9828 4504 51	
F21	1		•	OVERLOAD RELAY	
		1089 9512 54		9828 4504 30	
		1089 9512 54		9828 4504 31	
		1089 9512 56		9828 4504 32	
		1089 9512 56		9828 4504 33	
		1089 9446 55		9828 4504 40	
		1089 9446 55		9828 4504 41	
		1089 9512 69		9828 4504 45	
		1089 9512 69		9828 4504 46	
		1089 9512 70		9828 4504 50	
		1089 9512 70		9828 4504 51	
F1-F2	1	1089 9594 02	•	FUSE HOLDER	
F4	1	1089 0506 78	•	FUSE HOLDER	
F4	1	1089 0506 79	•	END PLATE	
F7-F8	1		•	FUSE HOLDER	
		1089 9594 04		9828 4504 31	
		1089 9594 04		9828 4504 33	
		1089 9594 04		9828 4504 41	
		1089 9594 04		9828 4504 46	

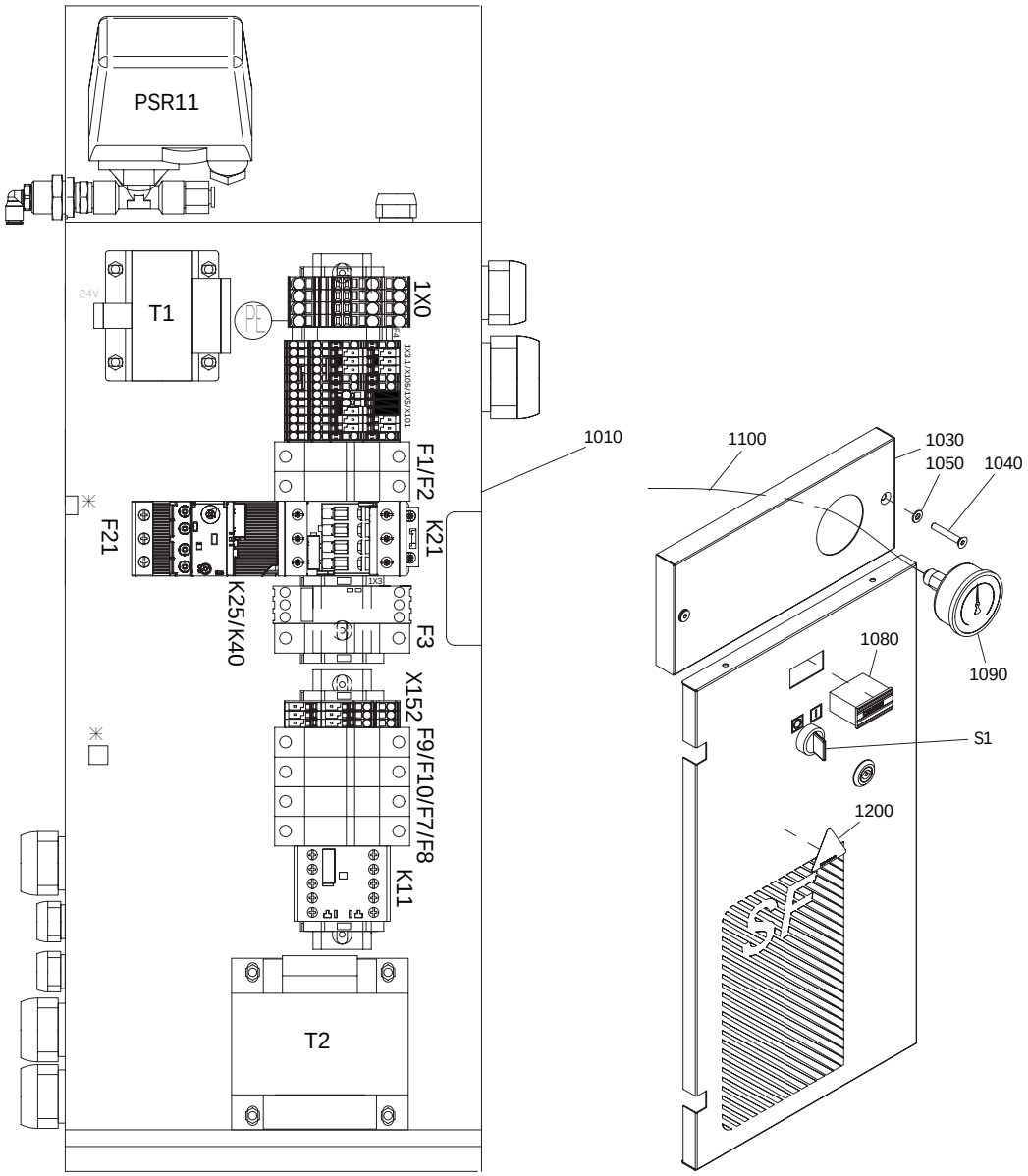

9820 6376 70-01ED00

Item No.	Qty.	Part Number		Description	Remarks
		1089 9594 04		9828 4504 51	
F9-F10	1		•	FUSE HOLDER	
		1089 9594 04		9828 4504 41	
		1089 9594 04		9828 4504 46	
		1089 9594 04		9828 4504 51	
-	1	0993 7106 29	•	DIN RAIL 35X7,5MM L=230MM	
-	1		•	DIN RAIL 35X7,5MM L=168MM	
		0993 7106 29		9828 4504 31	
		0993 7106 29		9828 4504 33	
		0993 7106 29		9828 4504 41	
		0993 7106 29		9828 4504 46	
		0993 7106 29		9828 4504 50	
		0993 7106 29		9828 4504 51	
-	1	2203 0527 00	•	DATA PLATE	
-	1	1089 9154 02	•	KEY	
1010	1	2203 0335 80	•	CUBICLE	
1020	7	0129 3270 38		RIVET	
1030	1	2203 0376 03		CUBICLE TOP	
1040	2	0216 1957 75		SCREW	
1050	2	2202 9392 01		WASHER	
1080	1	1089 0642 46		HOURMETER	
1090	1	9090 0239 00		PRESSURE GAUGE	
1100	AR	0070 7250 04		PLASTIC TUBE	
1200	1	1613 3431 00		LABEL	

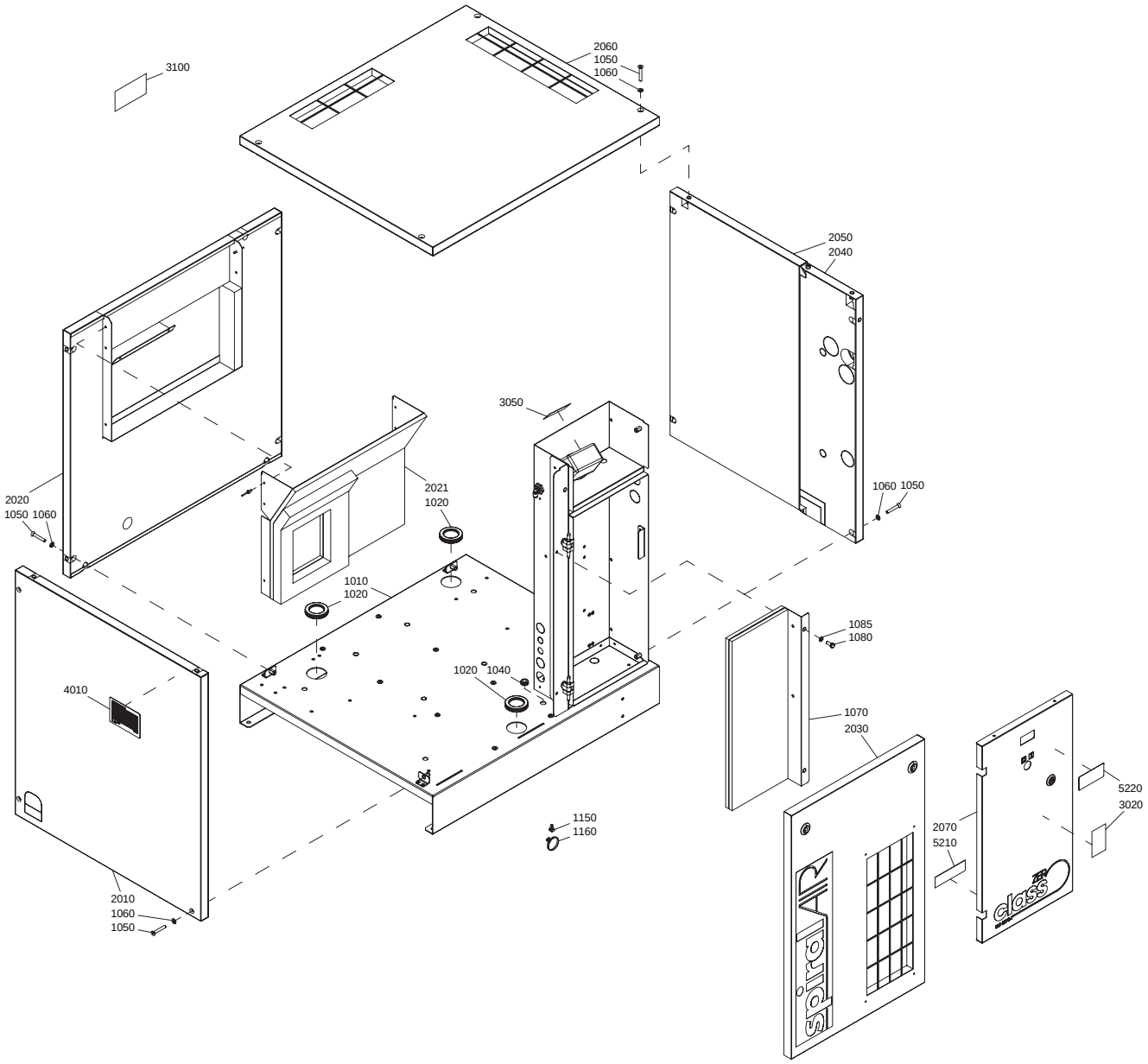

9820 6376 88-01ED00

Item No.	Qty.	Part Number		Description	Remarks
1010	**1**	**2203 0321 83**		**BASE FRAME**	
1020	3	1088 0803 07	•	GROMMET	
1040	1	0989 4220 45		GROMMET	
1050	14	0216 1957 75		SCREW	
1060	14	2202 9392 01		WASHER	
1070	**1**	**2203 0332 80**		**BAFFLE**	1)
1080	2	0147 1246 03		HEX.BOLT	
1085	2	0301 2321 00		WASHER	
1150	1	6236 3126 00		CLIP	
1160	10	0348 0101 17		CABLE STRIP	
2010	**1**	**2203 0325 03**		**PANEL**	2)
2020	**1**	**2203 0324 83**		**PANEL**	1)2)
2021	1	2203 0427 00		DUCT	
2030	**1**	**2203 0323 83**		**PANEL**	2)
	2	1613 9237 00	•	LOCK	
	1	0690 1116 01	•	DECAL	
2040	**1**	**2203 0326 03**		**PANEL**	2)
2050	**1**	**2203 0378 03**		**PANEL**	2)
2060	**1**	**2203 0327 83**		**ROOF**	2)
2070	**1**	**2203 0320 83**		**CUBICLE DOOR**	
	1	2236 0111 00	•	LOCK	
	1	1079 9923 72	•	LABEL	
	1	2203 0735 00	•	DECAL	
	1	2236 0855 00	•	DECAL	
3020	1			DECAL	
		2236 0840 13		QOF 2	
		2236 0840 15		QOF 3	
		2236 0840 17		QOF 5	
		2236 0840 01		QOF 7.5	
3050	1	1079 9922 15		LABEL	
3100	1	2236 2201 55		WARNING LABEL	
4010	1			DATA PLATE	
		1625 8499 15		IEC	
		1625 8499 17		UL-CUL	
5210	1			LABEL	
		1622 7305 00		UL-CUL	
5220	1			LISTING MARK	
		1613 5330 10		UL-CUL	

1-2) LINED WITH:
1) FOAM: 0395600162 (AR) 10 X 2040 X 1650 (SELF-ADHESIVE)
2) FOAM: 0395600166 (AR) 25 X 2040 X 1650 (SELF-ADHESIVE)

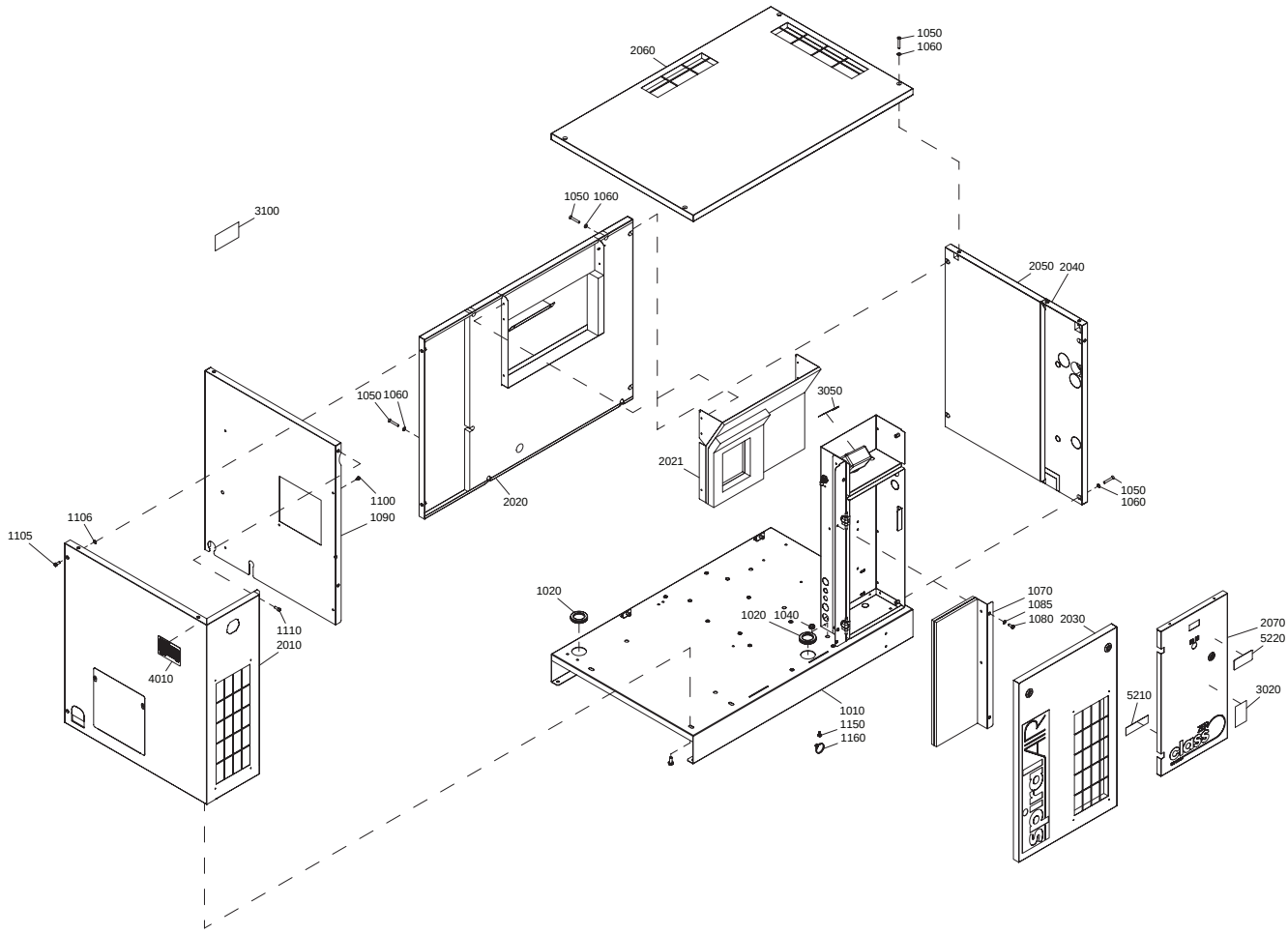

9820 6376 89-01ED00

Item No.	Qty.	Part Number		Description	Remarks
1010	**1**	**2203 0322 83**		**BASE FRAME**	
1020	2	1088 0803 07	•	GROMMET	
1040	1	0989 4220 45		GROMMET	
1050	11	0216 1957 75		SCREW	
1060	11	2202 9392 01		WASHER	
1070	**1**	**2203 0332 80**		**BAFFLE**	1)
1080	2	0147 1246 03		HEX.BOLT	
1085	2	0301 2321 00		WASHER	
1090	**1**	**2203 0724 00**		**BAFFLE**	
	1	0989 4220 08	•	GROMMET	
1100	5	0226 3139 24		SCREW	
1105	2	0147 1246 03		HEX.BOLT	
1106	2	0301 2321 00		WASHER	
1110	2	0211 1246 03		HEX.HEAD SCREW	
1150	1	6236 3126 00		CLIP	
1160	10	0348 0101 17		CABLE STRIP	
2010	1	2203 0723 03		PANEL	
2020	**1**	**2203 0722 83**		**PANEL**	1)2)
2021	1	2203 0427 00		DUCT	
2030	**1**	**2203 0323 83**		**PANEL**	2)
	2	1613 9237 00	•	LOCK	
	1	0690 1116 01	•	DECAL	
2040	**1**	**2203 0326 03**		**PANEL**	2)
2050	**1**	**2203 0378 03**		**PANEL**	2)
2060	**1**	**2203 0333 83**		**ROOF**	2)
2070	**1**	**2203 0320 83**		**CUBICLE DOOR**	
	1	2236 0111 00	•	LOCK	
	1	1079 9923 72	•	LABEL	
	1	2203 0735 00	•	DECAL	
	1	2236 0855 00	•	DECAL	
3020	1			DECAL	
		2236 0840 14		QOF 2 W/DRYER	
		2236 0840 16		QOF 3 W/DRYER	
		2236 0840 18		QOF 5 W/DRYER	
		2236 0840 02		QOF 7.5 W/DRYER	
3050	1	1079 9922 15		LABEL	
3100	1	2236 2201 55		WARNING LABEL	
4010	1			DATA PLATE	
		1625 8499 15		IEC	
		1625 8499 17		UL-CUL	
5210	1			LABEL	
		1622 7305 00		UL-CUL	
5220	1			LISTING MARK	
		1613 5330 10		UL-CUL	

1-2) LINED WITH:
1) FOAM: 0395600162 (AR) 10 X 2040 X 1650 (SELF-ADHESIVE)
2) FOAM: 0395600166 (AR) 25 X 2040 X 1650 (SELF-ADHESIVE)

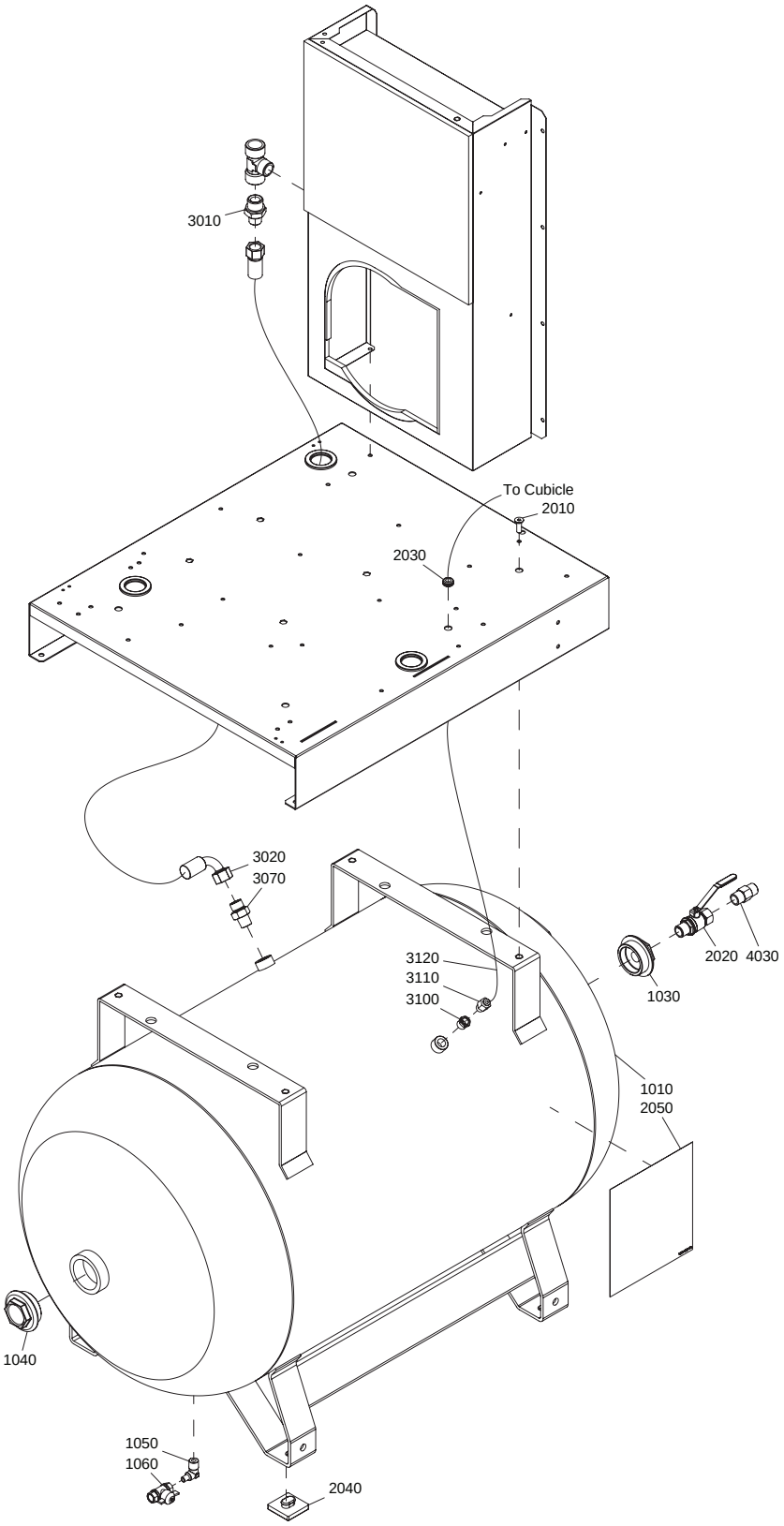

9820 6376 77-01ED00

Item No.	Qty.	Part Number		Description	Remarks
	1			**STANDARD OPTION**	
				270L AIR RECEIVER	
		2236 2203 09		AD2000	
		2236 2203 21		AS1210	
		2236 2203 15		ASME	
		2236 2203 03		CE	
		2236 2203 33		MHLW	
		2236 2203 39		ML	
		2236 2203 27		MOM	
1010	**1**		•	**VESSEL ASSEMBLY**	
		2203 0340 86		AD2000	
		2203 0340 93		AS1210	
		2203 0340 89		ASME	
		2203 0340 83		CE	
		2203 0340 99		MHLW	
		2203 0592 83		ML	
		2203 0340 96		MOM	
1030	1	2200 7506 45	••	REDUCER	
1040	1	2200 7509 11	••	PLUG	
1050	1	1503 2565 41	••	ELBOW	
1060	1	0852 0010 36	••	BALL VALVE	
2010	4	0216 1957 86	•	SCREW	
2020	1	0852 0011 52	•	BALL VALVE	
2030	1	0989 4220 45	•	GROMMET	
2040	4	1502 4202 00	•	PAD	
2050	1	1079 9932 07	•	DECAL	
3010	1	0603 5522 03	•	NIPPLE	
3020	1	2203 0474 01	•	HOSE	
3070	1	1503 1225 00	•	NIPPLE	
3100	1	0605 8301 38	•	BUSHING	
3110	1	9090 1508 00	•	COUPLING	
3120	AR	0070 7250 04	•	PLASTIC TUBE	
4030	1		•	NIPPLE	
		0603 4150 14		ASME	

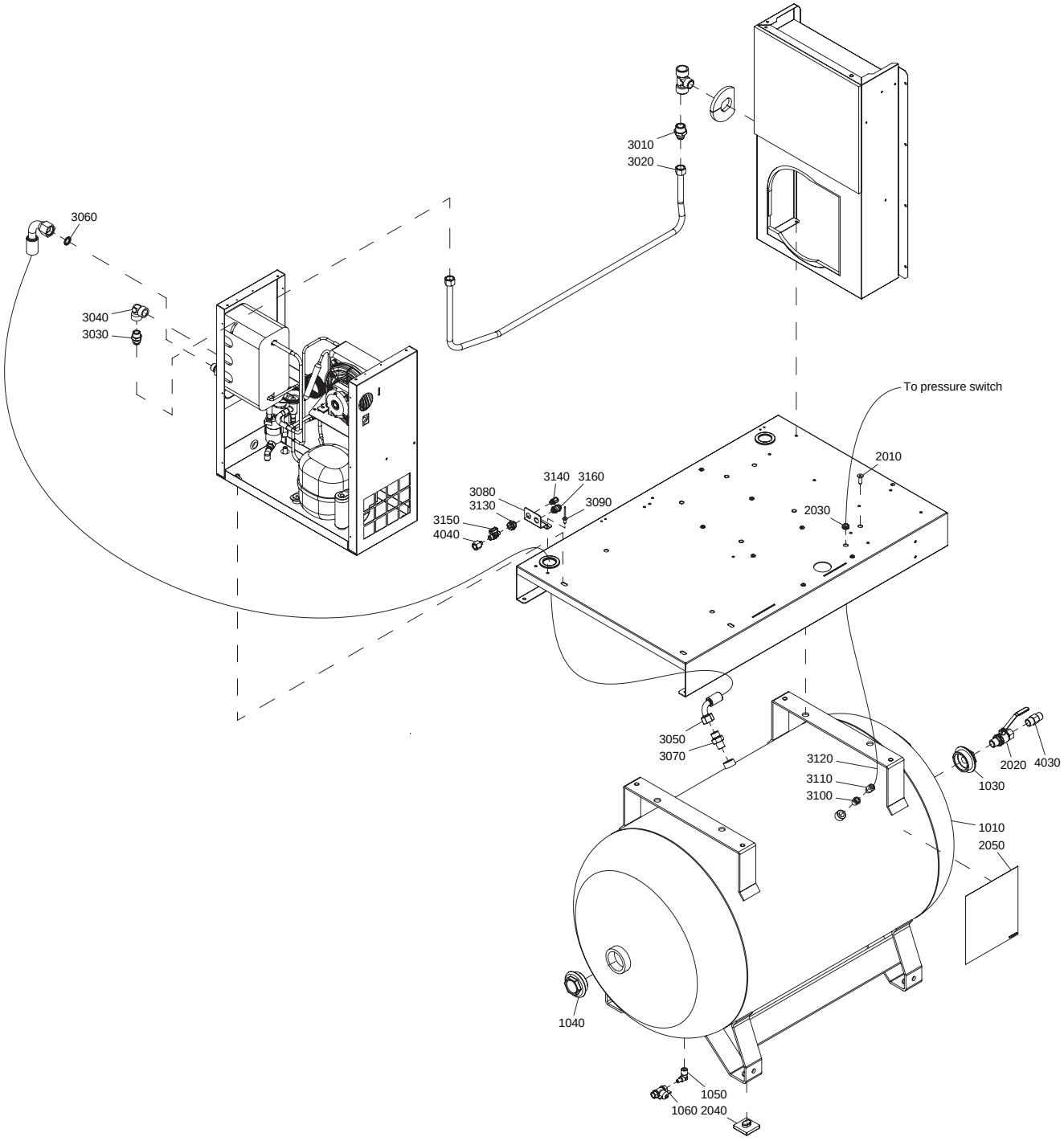

9820 6376 78-01ED00

Item No.	Qty.	Part Number		Description	Remarks
	1			**STANDARD OPTION**	
				270L AIR RECEIVER	
		2236 2203 12		AD2000	
		2236 2203 24		AS1210	
		2236 2203 18		ASME	
		2236 2203 06		CE	
		2236 2203 36		MHLW	
		2236 2203 42		ML	
		2236 2203 30		MOM	
1010	**1**		•	**VESSEL ASSEMBLY**	
		2203 0340 86		AD2000	
		2203 0340 93		AS1210	
		2203 0340 89		ASME	
		2203 0340 83		CE	
		2203 0340 99		MHLW	
		2203 0592 83		ML	
		2203 0340 96		MOM	
1030	1	2200 7506 45	••	REDUCER	
1040	1	2200 7509 11	••	PLUG	
1050	1	1503 2565 41	••	ELBOW	
1060	1	0852 0010 36	••	BALL VALVE	
2010	4	0216 1957 86	•	SCREW	
2020	1	0852 0011 52	•	BALL VALVE	
2030	1	0989 4220 45	•	GROMMET	
2040	4	1502 4202 00	•	PAD	
2050	1	1079 9932 07	•	DECAL	
3010	1	2203 0369 00	•	NIPPLE	
3020	1	2203 0622 00	•	PIPE	
3030	1	2203 0380 00	•	NIPPLE	
3040	1	0605 9500 38	•	FITTING	
3050	1	2203 0474 02	•	HOSE	
3060	1	0661 1000 40	•	SEAL WASHER	
3070	1	1503 1225 00	•	NIPPLE	
3080	1	2203 0468 00	•	STIRRUP	
3090	2	0129 3270 38	•	RIVET	
3100	1	0605 8301 38	•	BUSHING	
3110	1	9090 1508 00	•	COUPLING	
3120	AR	0070 7250 04	•	PLASTIC TUBE	
3130	1	0570 7017 28	•	BULKHEAD UNION	
3140	1	0583 8100 66	•	FITTING	
3150	1	0852 0011 53	•	BALL VALVE	
3160	1	0583 8100 70	•	FITTING PIPE	
4030	1		•	NIPPLE	
		0603 4150 14		ASME	
4040	1		•	BUSHING	
		0605 8350 55		ASME	

Notes

Quincy Compressor Products: 251.937.5900
E-mail: info@quincycompressor.com
Website: quincycompressor.com

© 2012 Quincy Compressor
All Rights Reserved. Litho in U.S.A.