QOF-20/22/30

Direct Drive Oil-free scroll compressors

Parts Manual

This manual contains important safety information and should be made available to all personnel who operate and/or maintain this product. Carefully read this manual before attempting to operate or perform maintenance on this equipment.

Manual No. 2930 7140 30

November 2014 Edition

Table of Contents

1 SERVICE KITS 4-5

2 DRIVE ARRANGEMENT - QOF 20 6-9

3 DRIVE ARRANGEMENT - QOF 22, QOF 30 10-17

4 AIR FLOW - AIR OUTLET - QOF 20 18-19

5 AIR FLOW - AIR OUTLET - QOF 22, QOF 30 20-21

6 AIR FLOW - AIR OUTLET - PACK - WSD 25 22-23

7 AIR FLOW - AIR OUTLET - QOF 20 W/DRYER 24-25

8 AIR FLOW - AIR OUTLET - QOF 22 W/DRYER, QOF 30 W/DRYER 26-27

9 AIR FLOW - AIR OUTLET - AIR DRYER 28-29

10 COOLING SYSTEM - QOF 20 30-31

11 COOLING SYSTEM - QOF 22, QOF 30 32-33

12 REGULATING SYSTEM - QOF 20, QOF 22, QOF 30 34-37

13 REGULATING SYSTEM - QOF 20 W/DRYER, QOF 22 W/DRYER, QOF 30 W/DRYER 38-41

14 CUBICLE - IEC 42-47

15 CUBICLE - UL-CUL 48-55

16 BODYWORK 56-59

NOTE 60-60

Item No.	Qty.	Part Number	Description	Remarks
	1	**2901 0014 50**	**CHECK VALVE KIT**	
	1	2236 0509 00 •	PISTON	
	1	0663 2108 05 •	O-RING	
	1	0663 2112 13 •	O-RING	
	1	**2892 6100 20**	**GREASE CARTRIDGE**	
	1	**2901 1397 00**	**OUTLET PIPE SET - QOF 20**	
		2802 5100 41 •	INSULATION PIPE	
		2806 6470 11 •	NIPPLE	
		9820 5616 00 •	INSTRUCTION	
	1		**FLOATER KIT - WSD**	
	1	**2904 5000 69**	QOF 20, QOF 22, QOF 30	
	1	0663 2111 28 •	O-RING	
	1	0663 6137 00 •	O-RING	
	1	1613 9227 82 •	AUTOMATIC DRAIN	
	3	0663 2133 00 •	O-RING	
	1		**ELECTRONIC DRAIN VALVE KIT**	
		2200 9020 17	QOF 20 W/DRYER, QOF 22 W/DRYER, QOF 30 W/DRYER	
	1	**2901 1584 01**	**TIP SEAL - DUST SEAL KIT**	
			QOF 20 - 8BAR(E), 116PSIG	
	1	2802 5570 31 •	TIP SEAL HP FS	
	1	2802 5190 20 •	TIP SEAL LP FS	
	1	2802 5560 31 •	TIP SEAL HP OS	
	1	2802 5200 20 •	TIP SEAL LP OS	
	1	2802 5261 30 •	DUST SEAL RESIN	
	1	2802 5271 30 •	BACKUP TUBE (RUBBER)	
	1	**2901 1584 02**	**TIP SEAL - DUST SEAL KIT**	
			QOF 20 - 10BAR(E), 145PSIG	
	1	2802 6630 50 •	TIP SEAL HP FS	
	1	2802 6660 50 •	TIP SEAL LP FS	
	1	2802 6670 50 •	TIP SEAL HP OS	
	1	2802 6620 60 •	TIP SEAL LP OS	
	1	2802 5261 30 •	DUST SEAL RESIN	
	1	2802 5271 30 •	BACKUP TUBE (RUBBER)	
	1	**2901 1977 00**	**TIP SEAL - DUST SEAL KIT**	
			QOF 22, QOF 30	
	1	1616 7438 00 •	TIP SEAL STATOR	
	1	1616 7439 00 •	TIP SEAL ROTOR	
	1	1616 7445 00 •	DUST SEAL	
	1	1616 7446 00 •	SILICON TUBE	
	2	2236 0435 00 •	GASKET	

Item No.	Qty.	Part Number	Description	Remarks
	1	**2902 0222 07**	**SERVICE STAGE EXCHANGE KIT QOF 20 - 8BAR(E), 116PSIG**	
	1	2236 0501 00 •	SERVICE STAGE	
	1	1622 0658 00 •	AIR FILTER ELEMENT	
	1	2236 0499 80 •	CHECK VALVE	
	1	**2902 0222 08**	**SERVICE STAGE EXCHANGE KIT QOF 20 - 10BAR(E), 145PSIG**	
	1	2236 0502 00 •	SERVICE STAGE	
	1	1622 0658 00 •	AIR FILTER ELEMENT	
	1	2236 0499 80 •	CHECK VALVE	
	1	**2902 0222 04**	**SERVICE STAGE EXCHANGE KIT QOF 22, QOF 30 - 8BAR(E), 116PSIG**	
	1	1616 7418 83 •	SERVICE STAGE	
	1	2236 0499 80 •	CHECK VALVE	
	2	1613 9001 00 •	AIR FILTER ELEMENT	
	1	**2902 0222 05**	**SERVICE STAGE EXCHANGE KIT QOF 22, QOF 30 - 10BAR(E), 145PSIG**	
	1	1616 7418 82 •	SERVICE STAGE	
	1	2236 0499 80 •	CHECK VALVE	
	2	1613 9001 00 •	AIR FILTER ELEMENT	

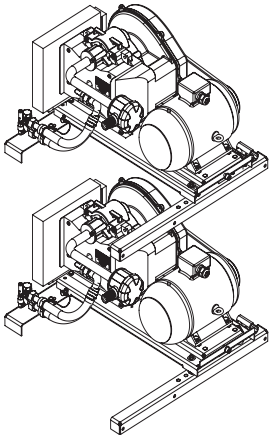

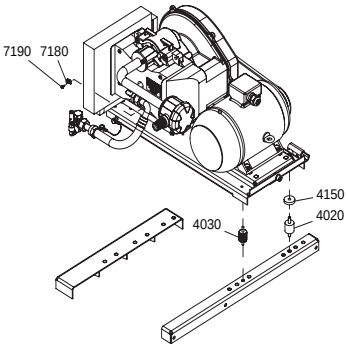

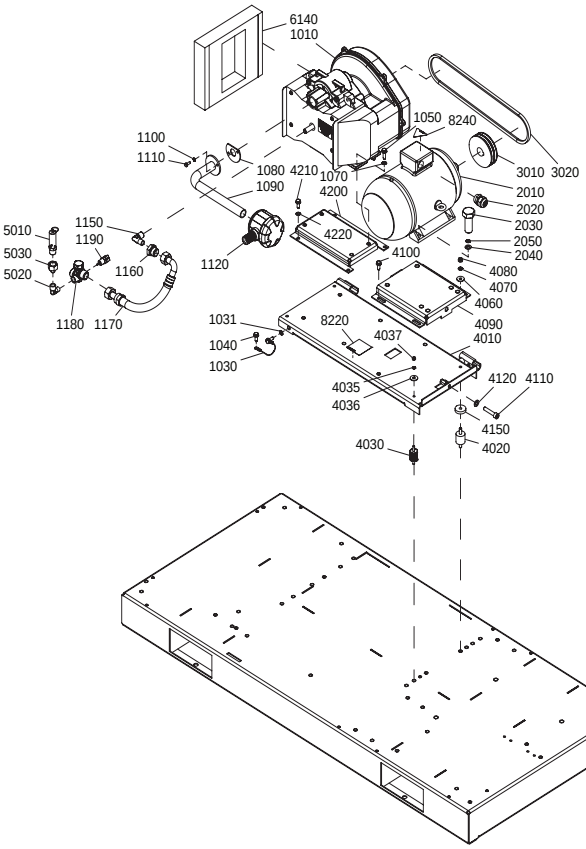

9820 9410 58-01ED00

Item No.	Qty.	Part Number	Description	Remarks
1010	4		SERVICE STAGE	
		2236 0501 00	8BAR(E)	
		2236 0502 00	10BAR(E)	
		2236 0501 00	100PSIG	
		2236 0502 00	145PSIG	
1030	4	1613 8967 12	GROUNDING WIRE	
1031	1	0333 3227 00	LOCK WASHER	
1040	8	0147 1963 08	HEXAGON BOLT	
1050	16	1619 5337 01	HEXAGON BOLT	
1070	16	0333 3227 00	LOCKWASHER	
1080	4	2236 0096 00	GASKET	
1090	4	2236 0803 00	PIPE	
1100	8	0333 3220 00	LOCK WASHER	
1110	8	0147 1246 03	SCREW	
1120	**4**	**2236 0025 00**	**AIR FILTER ASSEMBLY**	
	4	1622 0658 00 •	FILTER ELEMENT	
1150	4	1503 2565 03	ELBOW	
1160	4	2203 0433 00	NIPPLE	
1170	4	2236 0902 00	HOSE	
1180	**4**	**2236 0499 80**	**CHECK VALVE**	
	1	0663 2112 13 •	O-RING	
	1	2236 0509 00 •	PISTON	
	1	0663 2108 05 •	O-RING	
1190	4	1089 0574 88	TEMPERATURE SENSOR	
2010	4		MOTOR	
		2203 0521 12	400V/50HZ	
		2203 0521 10	460V/60HZ	
2020	4	0698 5140 73	CABLE GLAND	
2030	16	0147 1632 03	HEXAGON BOLT	
2040	16	0301 2344 00	WASHER	
2050	16	0333 3227 00	LOCAK WASHER	
3010	4		PULLEY	
		1622 0225 10	50HZ	
		1622 0225 14	60HZ	
3020	4		V-BELT SET	
		1513 0289 28	50HZ	
		1513 0289 42	60HZ	
4010	4	2236 0927 00	FRAME	
4020	12	0392 1100 15	VIBRATION DAMPER	
4030	4	0392 1100 63	ANTIVIBR. PAD	
4035	4	0333 3120 00	HEXAGON BOLT	
4036	4	0300 8019 00	WASHER	
4037	4	0266 2108 00	LOCKWASHER	
4060	12	0300 8019 00	WASHER	
4070	12	0333 3227 00	LOCKWASHER	
4080	12	0266 2110 00	NUT	
4090	4	2236 0688 00	SUPPORT	
4100	8	0147 1963 08	HEXAGON BOLT	
4110	4	0211 1957 75	SCREW	
4120	4	0301 2344 00	WASHER	
4150	8	0300 0274 79	WASHER	
4200	4	2236 0869 00	SUPPORT	
4210	16	0147 1963 08	HEXAGON BOLT	
4220	16	0333 3227 00	LOCK WASHER	

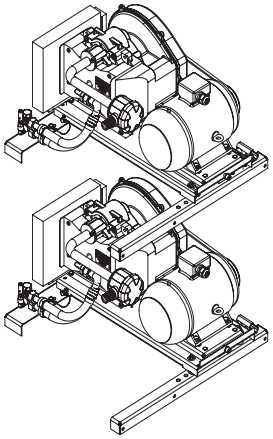

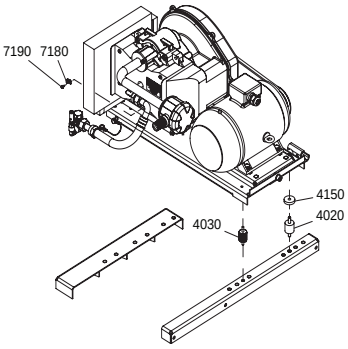

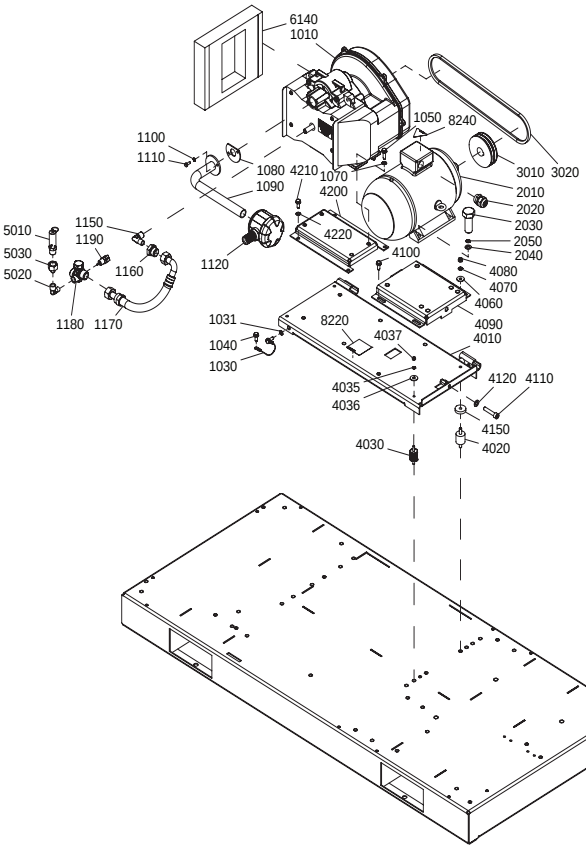

9820 9410 58-01ED00

Item No.	Qty.	Part Number	Description	Remarks
5010	4		SAFETY VALVE	
		0830 1009 17	8BAR(E) CE	
		0830 1009 18	10BAR(E) CE	
		0830 1008 49	100PSIG ASME	
		0830 1008 35	145PSIG ASME	
5020	4	0605 9500 26	COUPLING	
			8BAR(E) CE	
		1503 2565 02	10BAR(E) CE	
		1503 2565 02	100PSIG ASME	
		1503 2565 02	145PSIG ASME	
5030	4		BUSHING	
		0605 8701 82	100PSIG ASME	
		0605 8701 82	145PSIG ASME	
6140	4	2236 2233 00	SILENCING INSULATION	
7180	4	1089 9343 03	SUPPORT	
7190	4	0226 0300 41	SCREW	
8220	1	1079 9902 69	LABEL FIN	
8240	1	1088 1001 02	WARNING MARK	

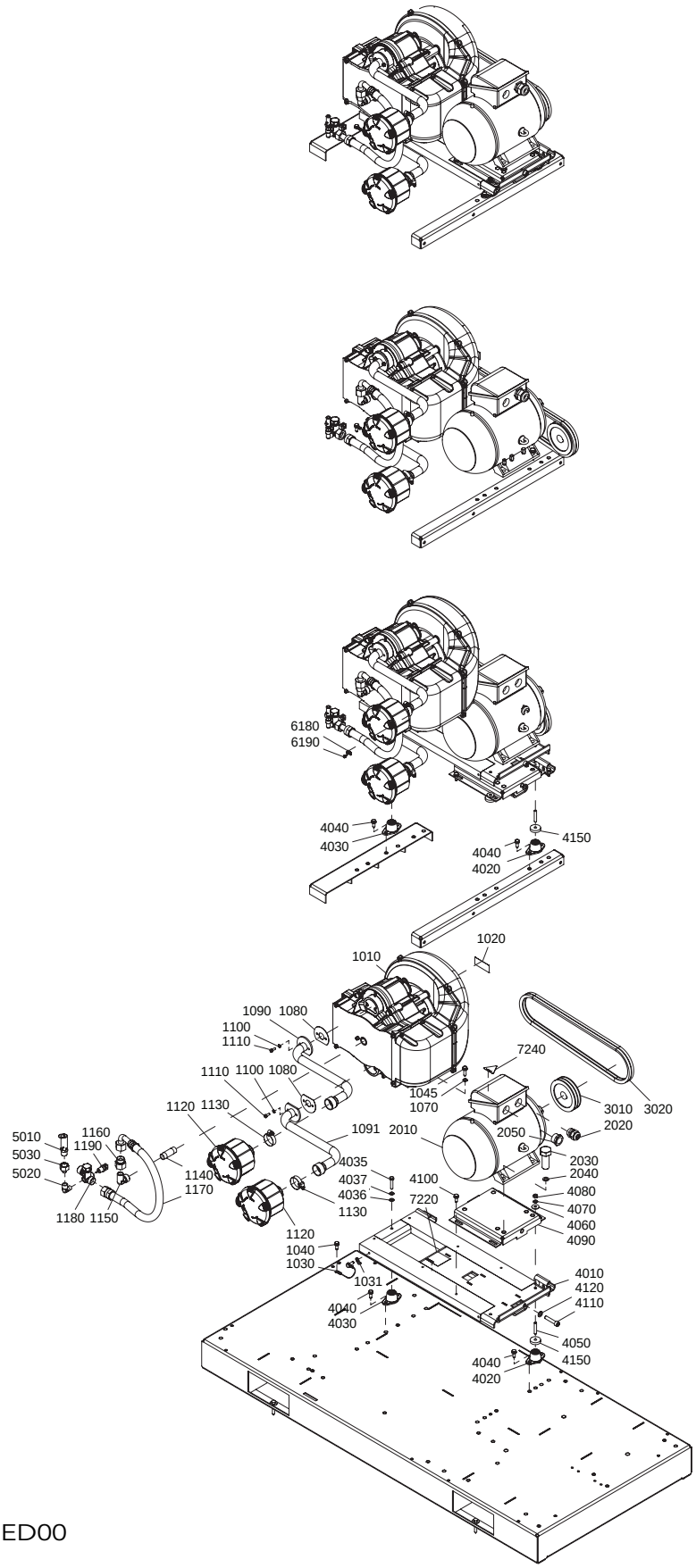

9820 9410 59-01ED00

Item No.	Qty.	Part Number	Description	Remarks
1010			SERVICE STAGE	
	3	1616 7418 83	QOF 22 8BAR(E)	
	3	1616 7418 82	QOF 22 10BAR(E)	
	3	1616 7418 83	QOF 22 100PSIG	
	3	1616 7418 82	QOF 22 145PSIG	
	4	1616 7418 83	QOF 30 8BAR(E)	
	4	1616 7418 82	QOF 30 10BAR(E)	
	4	1616 7418 83	QOF 30 100PSIG	
	4	1616 7418 82	QOF 30 145PSIG	
1020			ROTATION ARROW	
	3	1503 0786 00	QOF 22	
	4	1503 0786 00	QOF 30	
1030			GROUNDING WIRE	
	3	1613 8967 12	QOF 22	
	4	1613 8967 12	QOF 30	
1031			LOCK WASHER	
	6	0333 3227 00	QOF 22	
	8	0333 3227 00	QOF 30	
1040			HEXAGON BOLT	
	6	0147 1963 08	QOF 22	
	8	0147 1963 08	QOF 30	
1045			BOLT	
	12	1619 5337 01	QOF 22	
	16	1619 5337 01	QOF 30	
1070			LOCK WASHER	
	12	0333 3227 00	QOF 22	
	16	0333 3227 00	QOF 30	
1080			GASKET	
	6	2236 0435 00	QOF 22	
	8	2236 0435 00	QOF 30	
1090			PIPE	
	3	2236 0929 00	QOF 22	
	4	2236 0929 00	QOF 30	
1091			PIPE	
	3	2236 0928 00	QOF 22	
	4	2236 0928 00	QOF 30	
1100			LOCK WASHER	
	12	0333 3220 00	QOF 22	
	16	0333 3220 00	QOF 30	
1110			CAP SCREW	
	12	0147 1246 03	QOF 22	
	16	0147 1246 03	QOF 30	
1120			**AIR FILTER ASSEMBLY**	
	6	**2236 0471 00**	QOF 22	
	8	**2236 0471 00**	QOF 30	
	1	1613 9001 00 •	FILTER ELEMENT	
1130			HOSE CLIP	
	6	0347 6112 00	QOF 22	
	8	0347 6112 00	QOF 30	
1140			PIPE	
	3	0551 0002 83	QOF 22	
	4	0551 0002 83	QOF 30	
1150			ELBOW	
	3	1503 2565 04	QOF 22	
	4	1503 2565 04	QOF 30	

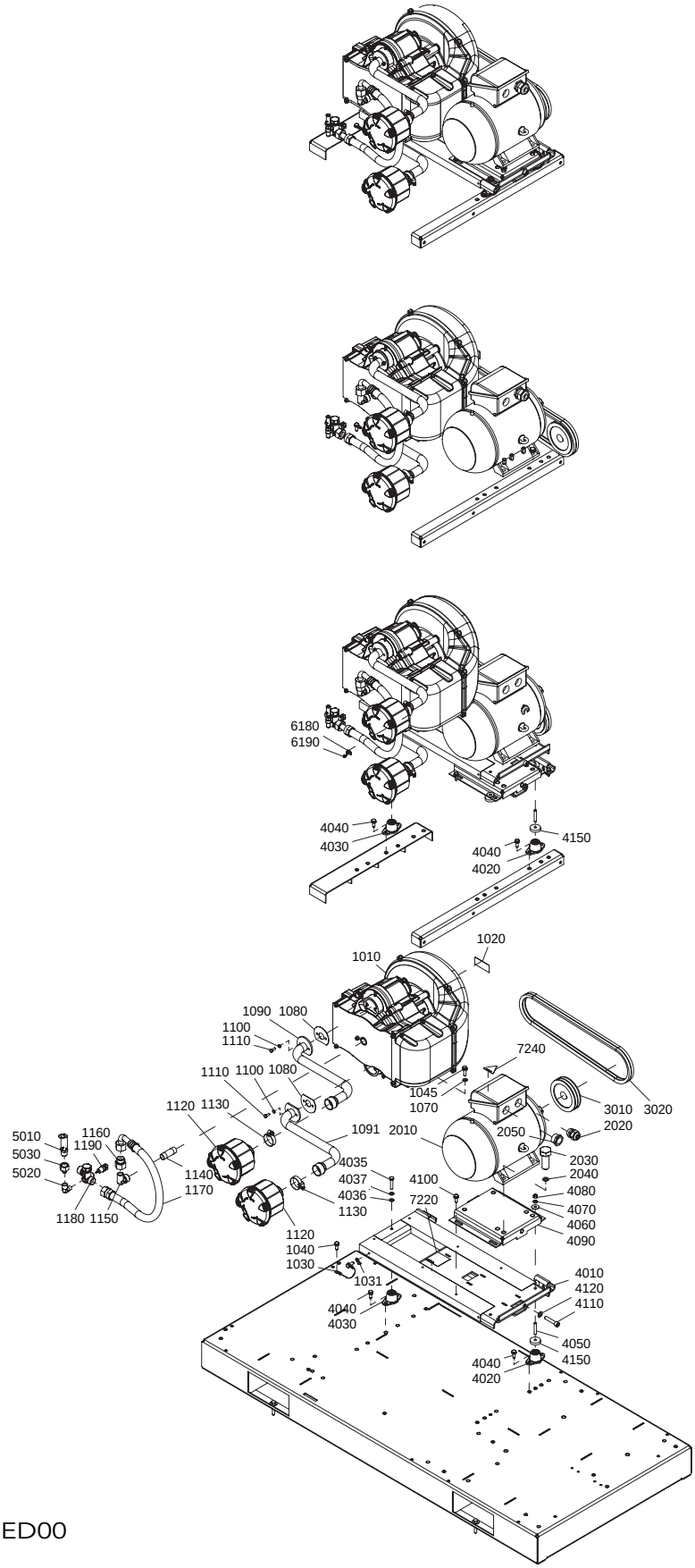

9820 9410 59-01ED00

Item No.	Qty.	Part Number	Description	Remarks
1160			NIPPLE	
	3	2203 0434 00	QOF 22	
	4	2203 0434 00	QOF 30	
1170			HOSE	
	3	2236 0897 00	QOF 22	
	4	2236 0897 00	QOF 30	
1180			**CHECK VALVE**	
	3	**2236 0499 80**	QOF 22	
	4	**2236 0499 80**	QOF 30	
	1	0663 2112 13 •	O-RING	
	1	2236 0509 00 •	PISTON	
	1	0663 2108 05 •	O-RING	
1190			TEMPERATURE SENSOR	
	3	1089 0574 88	QOF 22	
	4	1089 0574 88	QOF 30	
2010			MOTOR	
	3	2203 0521 13	QOF 22 400V/50HZ	
	3	2203 0521 17	QOF 22 460V/60HZ	
	4	1080 4220 14	QOF 30 400V/50HZ	
	4	1080 4220 02	QOF 30 460V/60HZ	
2020			CABLE GLAND	
	3	0698 5140 73	QOF 22	
	4	0698 5140 73	QOF 30	
2030			HEXAGON BOLT	
	12	0147 1632 03	QOF 22	
	16	0147 1632 03	QOF 30	
2040			WASHER	
	12	0301 2344 00	QOF 22	
	16	0301 2344 00	QOF 30	
2050			REDUCER	
	3	0697 9745 28	QOF 22	
	4	0697 9745 28	QOF 30	
3010			PULLEY	
	3	1622 0225 16	QOF 22 8BAR(E)/50HZ	
	3	1622 0225 20	QOF 22 10BAR(E)/50HZ	
	3	1622 0225 10	QOF 22 100PSIG/60HZ	
	3	1622 0225 23	QOF 22 145PSIG/60HZ	
	4	1622 0225 16	QOF 30 8BAR(E)/50HZ	
	4	1622 0225 20	QOF 30 10BAR(E)/50HZ	
	4	1622 0225 10	QOF 30 100PSIG/60HZ	
	4	1622 0225 23	QOF 30 145PSIG/60HZ	
3020			V-BELT SET	
	3	1613 9032 23	QOF 22 8BAR(E)/50HZ	
	3	1613 9032 01	QOF 22 10BAR(E)/50HZ	
	3	1613 9032 01	QOF 22 100PSIG/60HZ	
	3	1613 9032 24	QOF 22 145PSIG/60HZ	
	4	1613 9032 23	QOF 30 8BAR(E)/50HZ	
	4	1613 9032 01	QOF 30 10BAR(E)/50HZ	
	4	1613 9032 01	QOF 30 100PSIG/60HZ	
	4	1613 9032 24	QOF 30 145PSIG/60HZ	
4010			FRAME	
	3	2236 0687 00	QOF 22	
	4	2236 0687 00	QOF 30	
4020			BUFFER	
	6	0392 1600 06	QOF 22	

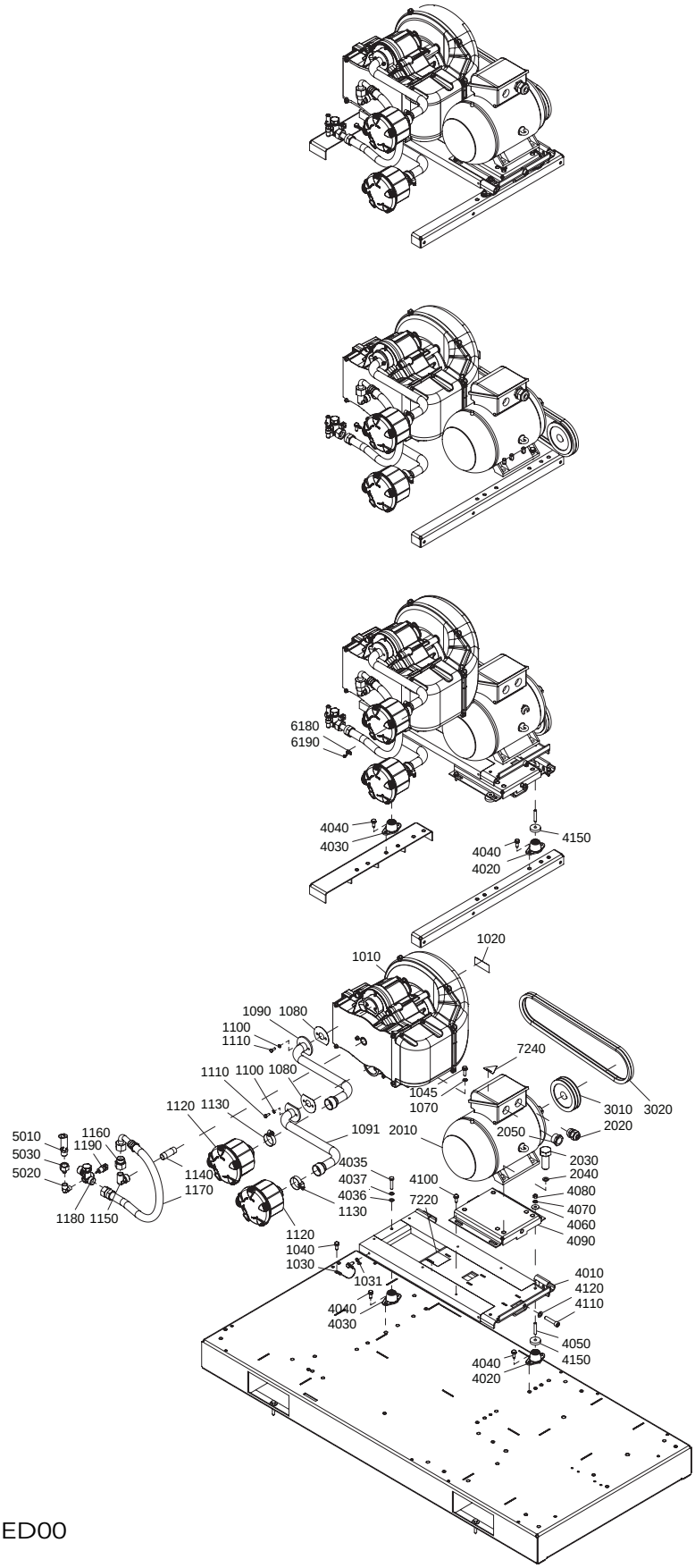

9820 9410 59-01ED00

Item No.	Qty.	Part Number	Description	Remarks
	8	0392 1600 06	QOF 30	
4030			BUFFER	
	3	0392 1600 09	QOF 22	
	4	0392 1600 09	QOF 30	
4035			HEXAGON BOLT	
	3	0147 1328 03	QOF 22	
	4	0147 1328 03	QOF 30	
4036			WASHER	
	3	0301 2335 00	QOF 22	
	4	0301 2335 00	QOF 30	
4037			LOCK WASHER	
	3	0333 3227 00	QOF 22	
	4	0333 3227 00	QOF 30	
4040			HEXAGON BOLT	
	18	0147 1963 08	QOF 22	
	24	0147 1963 08	QOF 30	
4050			STUD	
	6	0246 1956 20	QOF 22	
	8	0246 1956 20	QOF 30	
4060			WASHER	
	6	0300 8019 00	QOF 22	
	8	0300 8019 00	QOF 30	
4070			LOCK WASHER	
	6	0333 3227 00	QOF 22	
	8	0333 3227 00	QOF 30	
4080			NUT	
	6	0266 2110 00	QOF 22	
	8	0266 2110 00	QOF 30	
4090			SUPPORT	
	3	2236 0688 00	QOF 22	
	4	2236 0688 00	QOF 30	
4100			HEXAGON BOLT	
	6	0147 1963 08	QOF 22	
	8	0147 1963 08	QOF 30	
4110			SCREW	
	3	0211 1957 75	QOF 22	
	4	0211 1957 75	QOF 30	
4120			WASHER	
	3	0301 2344 00	QOF 22	
	4	0301 2344 00	QOF 30	
4150			WASHER	
	6	0300 0274 79	QOF 22	
	8	0300 0274 79	QOF 30	
5010			SAFETY VALVE	
	3	0830 1009 17	QOF 22 8BAR(E) CE	
	3	0830 1009 18	QOF 22 10BAR(E) CE	
	3	0830 1008 49	QOF 22 100PSI ASME	
	3	0830 1008 35	QOF 22 145PSI ASME	
	4	0830 1009 17	QOF 30 8BAR(E) CE	
	4	0830 1009 18	QOF 30 10BAR(E) CE	
	4	0830 1008 49	QOF 30 100PSI ASME	
	4	0830 1008 35	QOF 30 145PSI ASME	
5020			COUPLING	
	3	0605 9500 26	QOF 22 8BAR(E) CE	
	3	0605 9500 26	QOF 22 10BAR(E) CE	

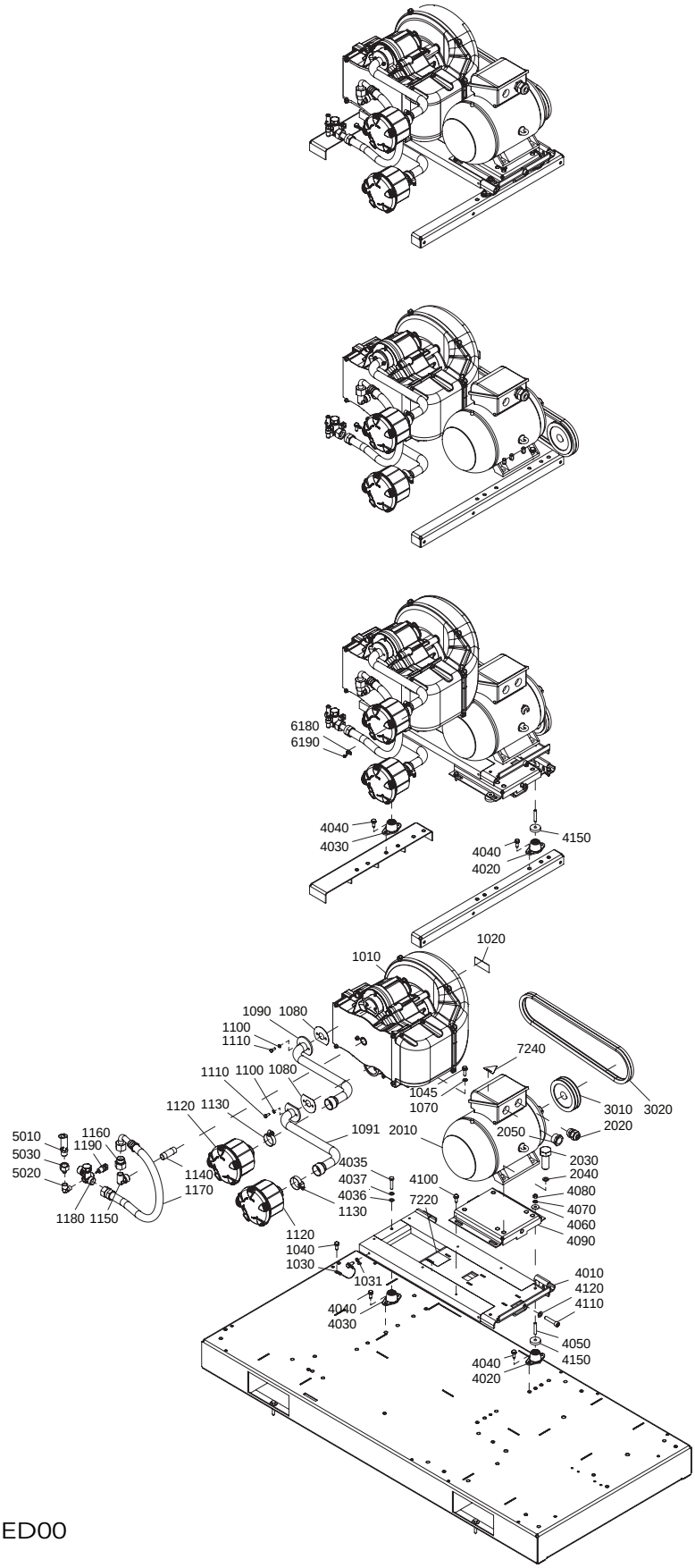

9820 9410 59-01ED00

Item No.	Qty.	Part Number	Description	Remarks
	3	0605 9500 26	QOF 22 100PSI ASME	
	3	0605 9500 26	QOF 22 145PSI ASME	
	4	0605 9500 26	QOF 30 8BAR(E) CE	
	4	0605 9500 26	QOF 30 10BAR(E) CE	
	4	0605 9500 26	QOF 30 100PSI ASME	
	4	0605 9500 26	QOF 30 145PSI ASME	
5030			BUSHING	
	3	0605 8701 82	QOF 22 100PSIG ASME	
	3	0605 8701 82	QOF 22 145PSIG ASME	
	4	0605 8701 82	QOF 30 100PSIG ASME	
	4	0605 8701 82	QOF 30 145PSIG ASME	
6180	1	1089 9343 03	SUPPORT	
6190	1	0226 0300 41	SCREW	
7220	4	1079 9902 69	LABEL 230°C	
7240	4	1088 1001 02	WARNING MARK	

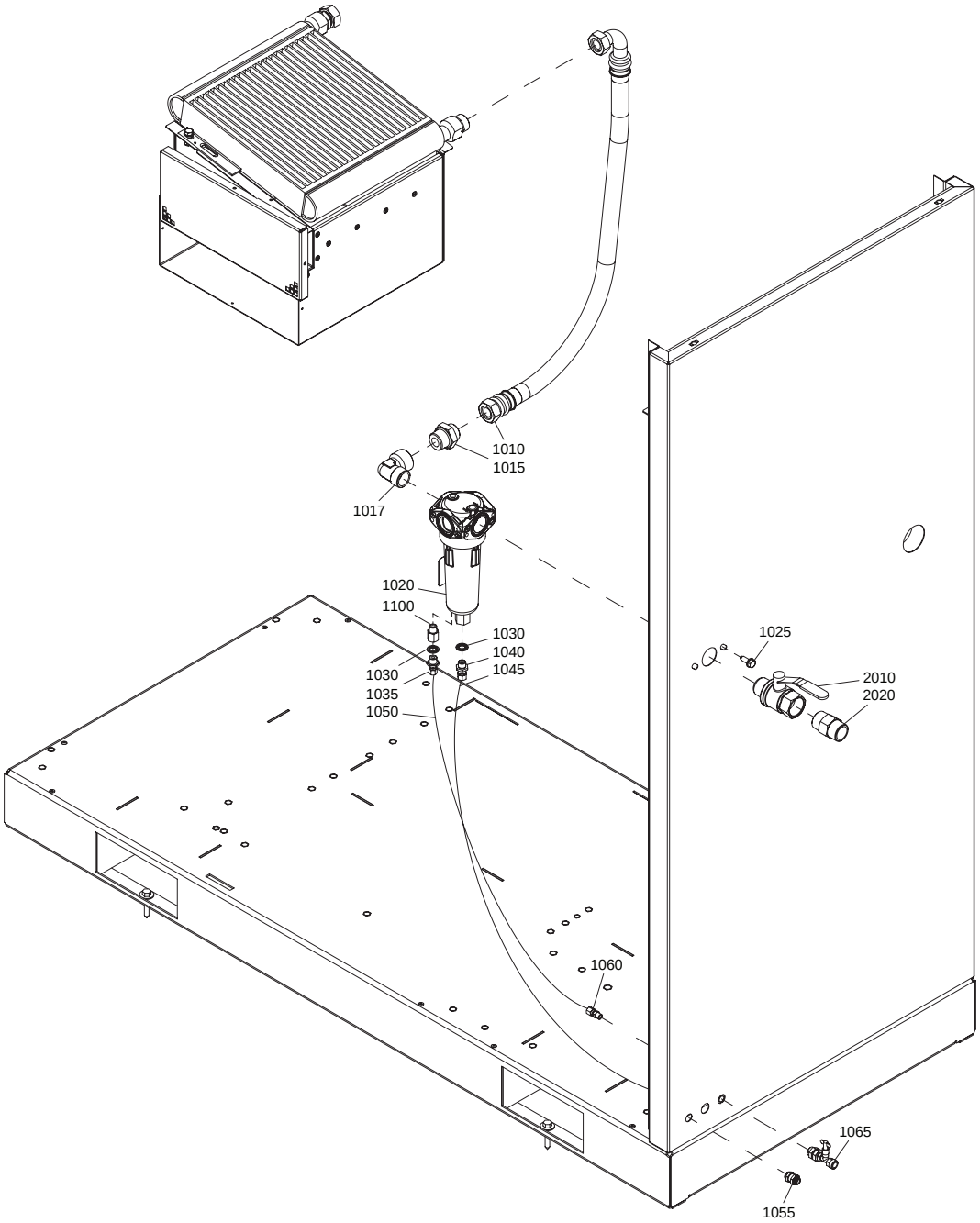

9828 5111 04-01ED00

Item No.	Qty.	Part Number	Description	Remarks
1010	1	2236 2245 00	HOSE ASSEMBLY	
1015	1	2236 2262 00	NIPPLE	
1017	1	0605 9500 19	ELBOW	
1020	**1**	**<<< >>>**	**WSD 25**	
1025	2	0147 1963 08	HEXAGON BOLT	
1030	2	0661 1000 38	SEAL WASHER	
1035	1	0581 0000 34	COUPLING	
1040	1	0581 0000 35	COUPLING	
1045	AR	0070 6002 05	PLASTIC TUBE	∅ 8MM
1050	AR	0070 6002 04	PLASTIC TUBE	∅ 6MM
1055	1	0583 8100 70	PIPE COUPLING	
1060	1	0581 0000 77	PIPE COUPLING	
1065	1	1613 8892 00	DRAIN VALVE	
1100	1	0605 8350 43	BUSHING	
2010	1	0852 0011 02	BALL VALVE	
2020	1		ADAPTOR	
		0603 4100 25	ASME	

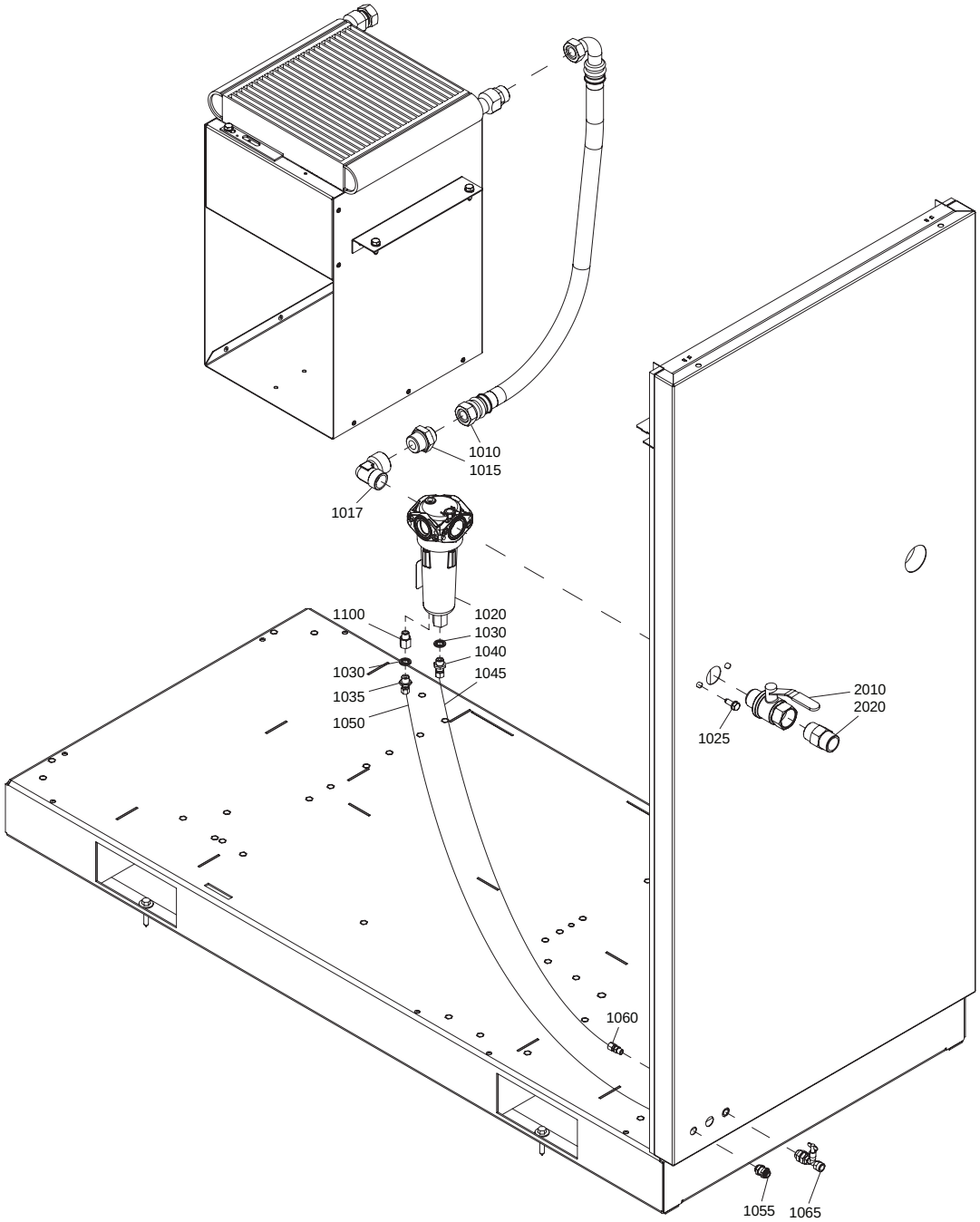

9820 9410 65-01ED00

Item No.	Qty.	Part Number	Description	Remarks
1010	1	2236 2245 00	HOSE ASSEMBLY	
1015	1	2236 2262 00	NIPPLE	
1017	1	0605 9500 19	ELBOW	
1020	**1**	**<<< >>>**	**WSD 25**	
1025	2	0147 1963 08	HEXAGON BOLT	
1030	2	0661 1000 38	SEAL WASHER	
1035	1	0581 0000 34	COUPLING	
1040	1	0581 0000 35	COUPLING	
1045	AR	0070 6002 05	PLASTIC TUBE	
1050	AR	0070 6002 04	PLASTIC TUBE	Ø 8MM
1055	1	0583 8100 70	PIPE COUPLING	Ø 6MM
1060	1	0581 0000 77	PIPE COUPLING	
1065	1	1613 8892 00	DRAIN VALVE	
1100	1	0605 8350 43	BUSHING	
2010	1	0852 0011 02	BALL VALVE	
2020	1		ADAPTOR	
		0603 4100 25	ASME	

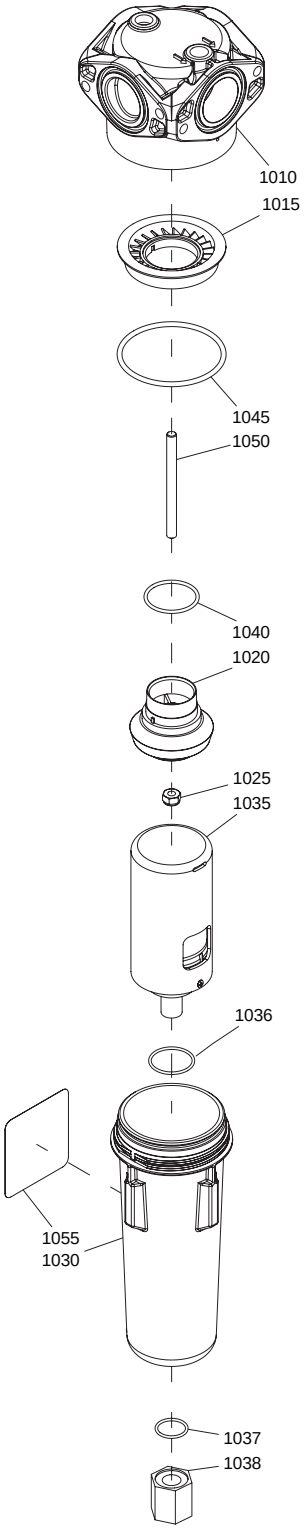

9820 9410 92-01ED00

Item No.	Qty.	Part Number	Description	Remarks
	1	**1613 8222 80**	**WSD 25**	
1010	1	•	HEAD	
1015	1	1613 9226 00•	RING	
1020	1	1613 9225 00•	CLAMP	
1025	1	0291 1128 01•	LOCK NUT	
1030	1	•	BOWL	
1035	1	1613 9227 83•	DRAIN FLOAT ASSEMBLY	
1036	1	0663 6128 00•	O-RING	
1037	1	0663 6124 00•	O-RING	
1038	1	1613 9247 00•	NUT	
1040	1	0663 9289 00•	O-RING	
1045	1	0663 2111 28•	O-RING	
1050	1	0246 1956 85•	STUD	
1055	1	1613 9346 02•	LABEL	

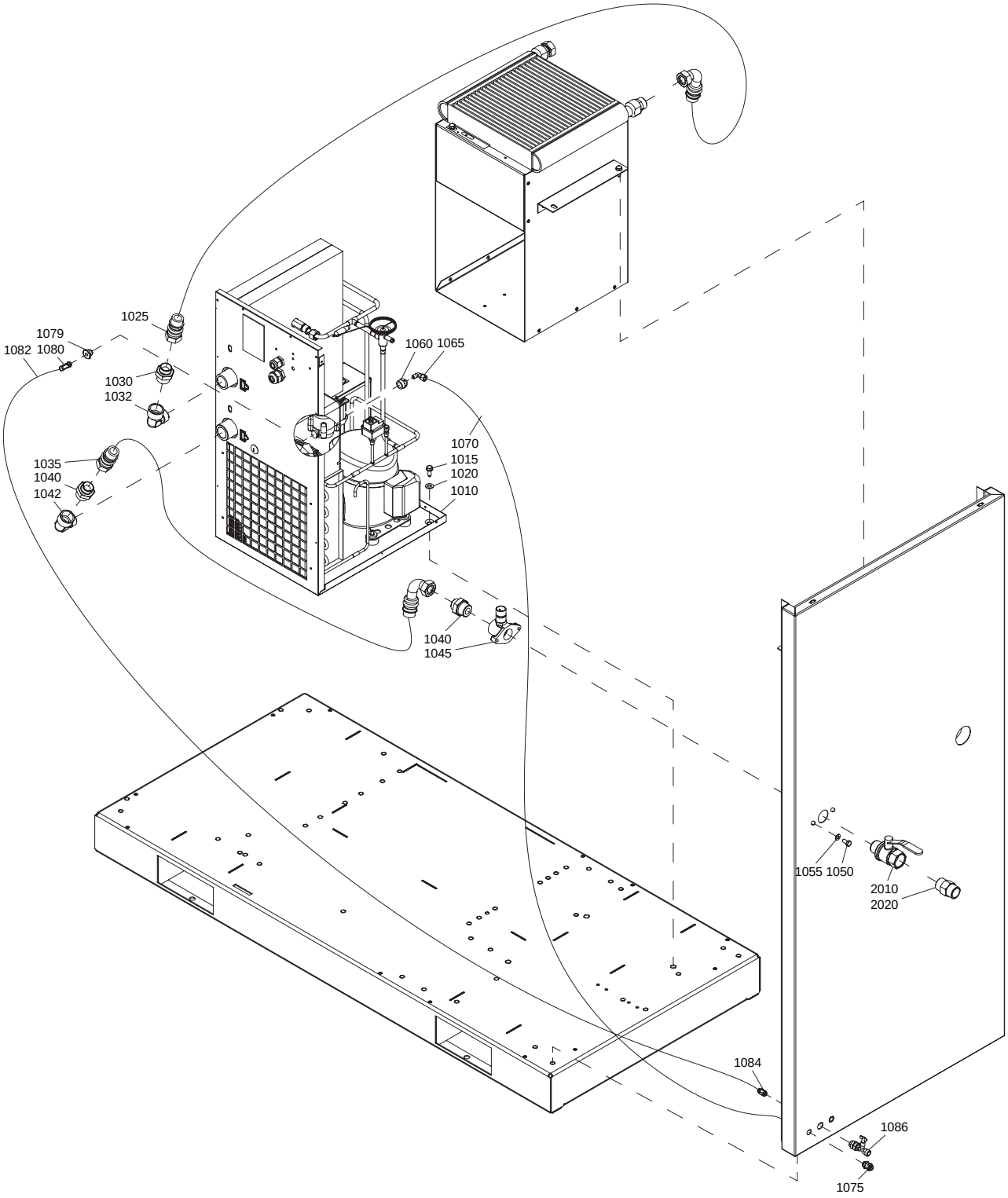

9828 5111 05-01ED00

Item No.	Qty.	Part Number	Description	Remarks
1010	**1**	**<<< >>>**	**AIR DRYER**	
1015	3	0147 1362 03	HEXAGON BOLT	
1020	3	0301 2344 00	WASHER	
1025	1	2236 2246 00	HOSE ASSEMBLY	
1030			NIPPLE	
	1	2236 2262 00	CE	
	2	2236 2262 00	ASME	
1032	1	0605 9500 19	ELBOW	
1035	1	2236 2245 00	HOSE ASSEMBLY	
1040	2	2236 2262 00	NIPPLE	
1042	1	0605 9500 19	ELBOW	
1045	1	1622 2733 00	CONNECTOR	
1050	2	0147 1322 03	HEXAGON BOLT	
1055	2	0301 2335 00	WASHER	
1060	1	0607 1151 06	SOCKET	
1065	1	0581 1200 26	ELBOW COUPLING	
1070	AR	0070 6002 05	PLASTIC TUBE	
1075	1	0583 8100 70	PIPE COUPLING	
1079	1	1622 7854 00	NIPPLE	
1080	1	0583 8120 73	FITTING	
1082	AR	0070 6002 04	PLASTIC TUBE	
1084	1	0583 8100 66	FITTING	
1086	1	1613 8892 00	COCK	
2010	1	0852 0011 02	BALL VALVE	
2020	1		ADAPTOR	
		0603 4100 25	ASME	

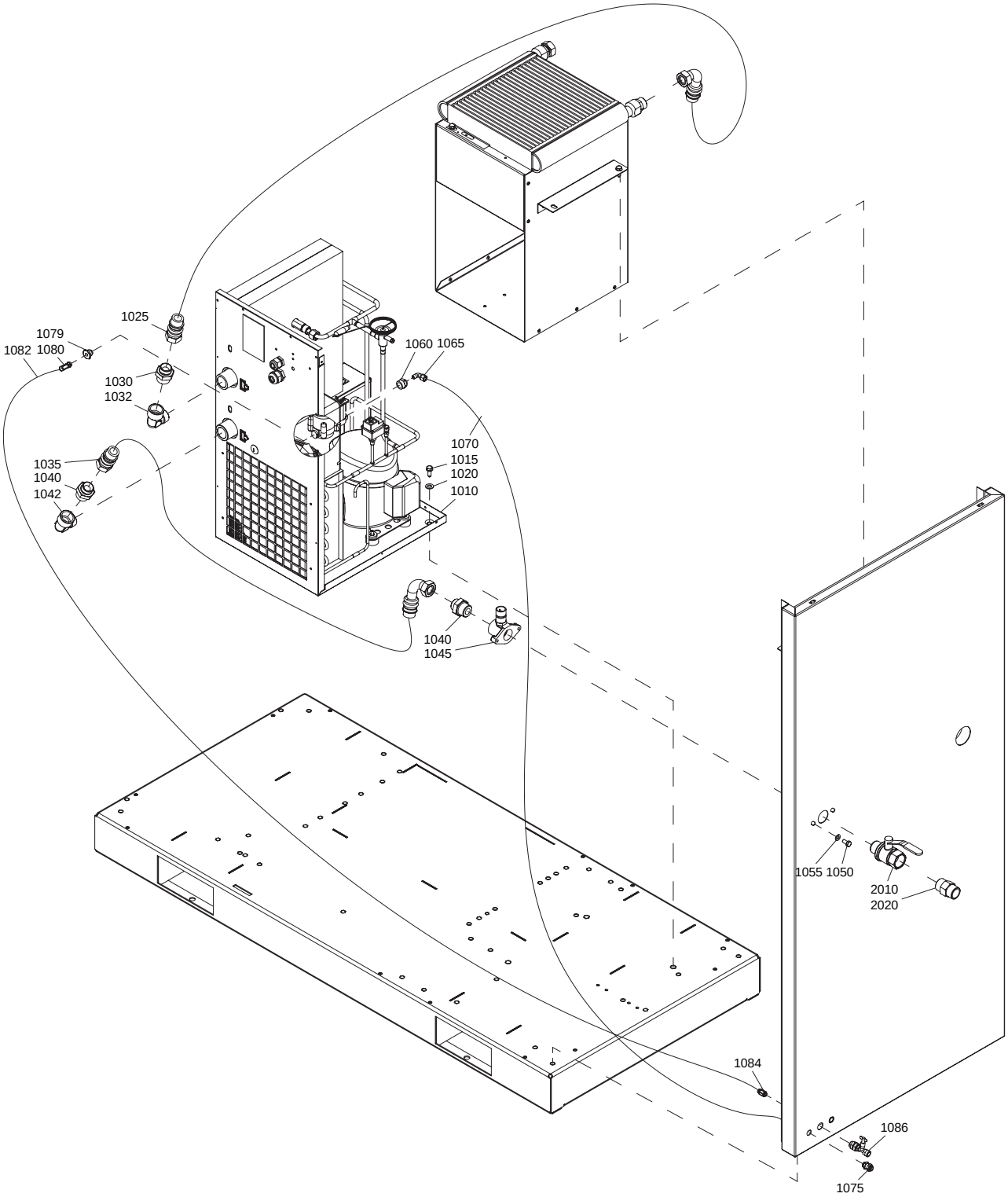

9820 9410 66-01ED00

Item No.	Qty.	Part Number	Description	Remarks
1010	**1**	**<<< >>>**	**AIR DRYER**	
1015	3	0147 1362 03	HEXAGON BOLT	
1020	3	0301 2344 00	WASHER	
1025	1	2236 2246 00	HOSE ASSEMBLY	
1030			NIPPLE	
	1	2236 2262 00	CE	
	2	2236 2262 00	ASME	
1032	1	0605 9500 19	ELBOW	
1035	1	2236 2245 00	HOSE ASSEMBLY	
1040	2	2236 2262 00	NIPPLE	
1042	1	0605 9500 19	ELBOW	
1045	1	1622 2733 00	CONNECTOR	
1050	2	0147 1322 03	HEXAGON BOLT	
1055	2	0301 2335 00	WASHER	
1060	1	0607 1151 06	SOCKET	
1065	1	0581 1200 26	ELBOW COUPLING	
1070	AR	0070 6002 05	PLASTIC TUBE	
1075	1	0583 8100 70	PIPE COUPLING	
1079	1	1622 7854 00	NIPPLE	
1080	1	0583 8120 73	FITTING	
1082	AR	0070 6002 04	PLASTIC TUBE	
1084	1	0583 8100 66	FITTING	
1086	1	1613 8892 00	DRAIN VALVE	
2010	1	0852 0011 02	BALL VALVE	
2020	1		ADAPTOR	
		0603 4100 25	ASME	

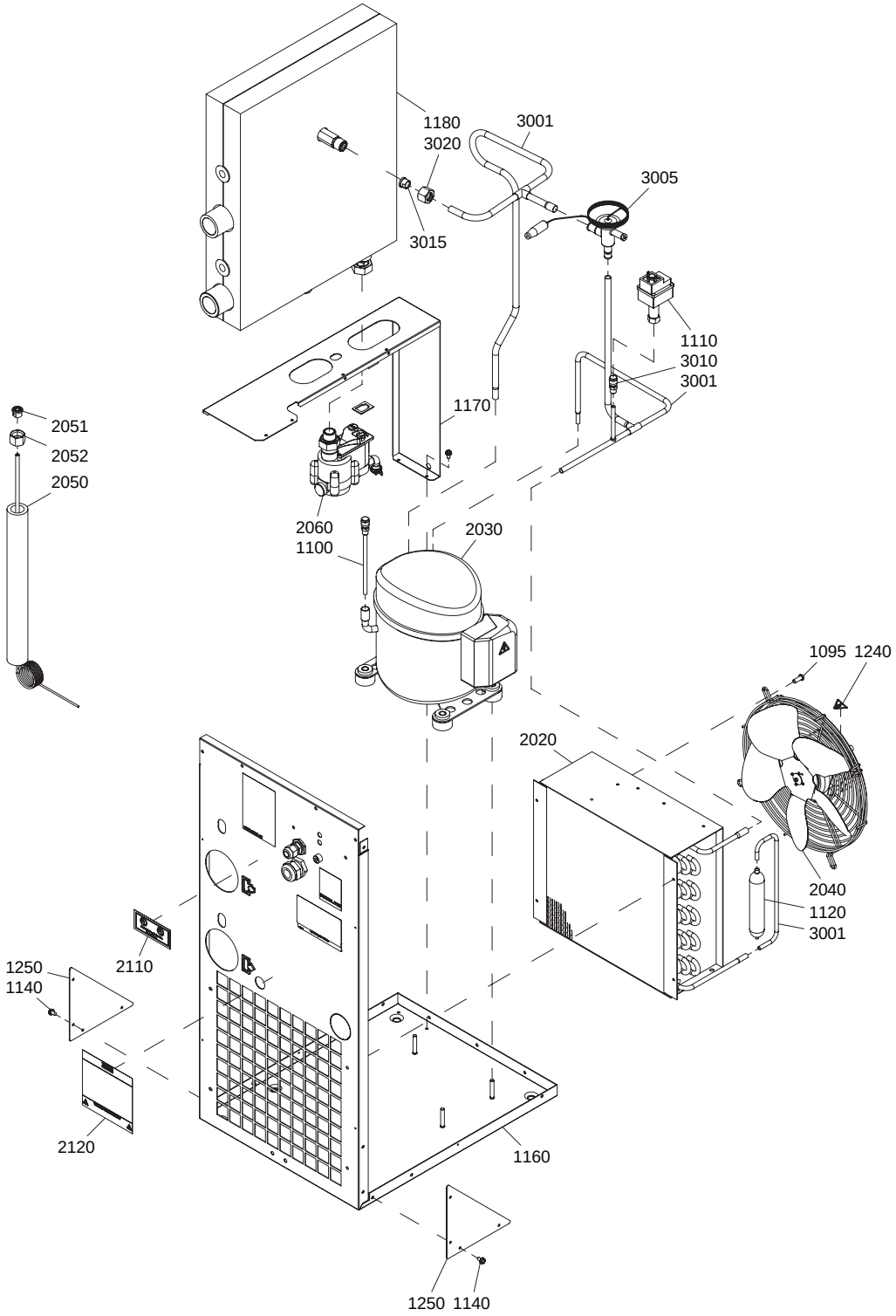

9820 6051 35-01ED00

Item No.	Qty.	Part Number	Description	Remarks
	1		**AIR DRYER**	1)
		1624 2468 81	230V/50HZ	
		1624 2468 82	230V/60HZ	
1095	4	0215 0003 91•	SCREW	
1100	2	2200 5997 43•	CHECK VALVE	
1110	1	2202 7562 05•	PRESSURE SWITCH	
1120	1	1617 2996 01•	FILTER DRYER	
1140	10	2200 7199 53•	SCREW	
1160	1	2202 7360 81•	FRAME	
1170	1	2202 7365 00•	SUPPORT	
1180	1	2202 7366 82•	HEAT EXCHANGER	
1240	1	2202 7705 00•	LABEL	
1250	2	2202 7706 00•	SUPPORT	
2020	1	2202 7351 02•	CONDENSOR	
2030	**1**	**•**	**COMPRESSOR**	
		2203 0265 02	230V/50HZ	
		2202 7370 06	230V/60HZ	
		•	START RELAY	
		2202 7651 18	230V/50HZ	
		2202 7651 08	230V/60HZ	
		•	OVERLOAD PROTECTION	
		2202 7652 25	230V/50HZ	
		2202 7652 10	230V/60HZ	
		•	START CAPACITOR	
		2202 7650 16	230V/50HZ	
		2202 7650 09	230V/60HZ	
2040	1	•	FAN	
		2202 7373 01	230V/50HZ	
		2202 7373 03	230V/60HZ	
2050	**1**	**2202 7413 02•**	**CAPILLARY PIPE**	
2051	1	2202 7466 02••	SLEEVE	
2052	1	2202 7466 10••	NUT	
2060	**1**	**2202 7547 03•**	**ELECTRONIC DRAIN**	
	1	0663 9096 00••	O-RING	Ø15.5 X 2.6
2110	1	•	LABEL	
		2202 2611 92	UL - CUL	
2120	1	•	LABEL	
		2202 7801 00	UL - CUL	
3001	**1**	**•**	**PIPE ASSEMBLY**	
		2203 0267 80	230V/50HZ	
		2202 9093 80	230V/60HZ	
3005	1	2202 7324 02••	HOT GAS BYPASS VALVE	
3010	1	2202 8516 00••	NON RETURN VALVE	
3015	1	2202 7466 01••	SLEEVE	
3020	1	2202 7466 02••	NUT	

1) REFRIGERANT R 404A

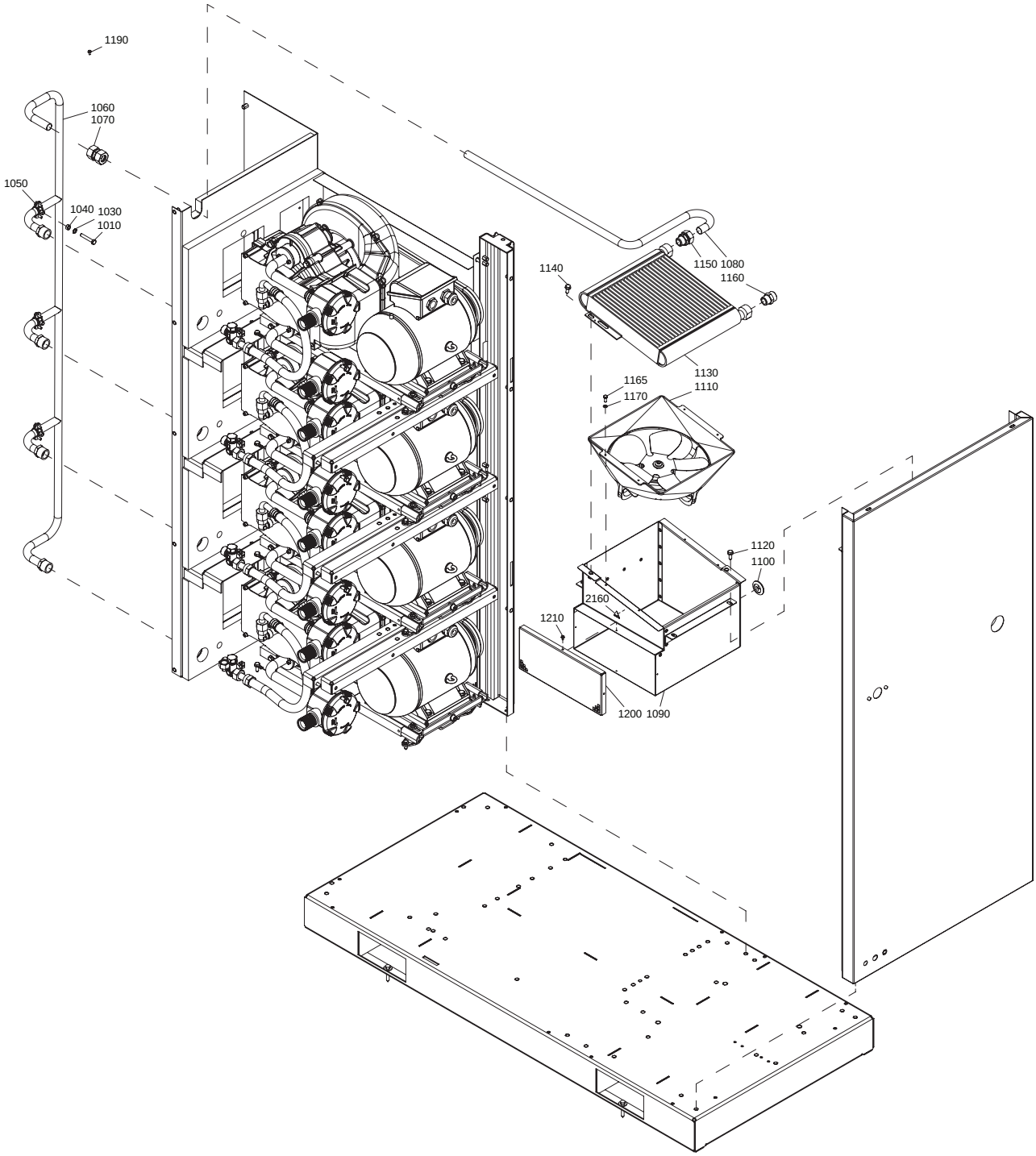

9828 5111 06-01ED00

Item No.	Qty.	Part Number	Description	Remarks
1010	3	0147 1330 12	HEXAGON BOLT	
1030	3	0333 3227 00	LOCKWASHER	
1040	3	0266 2110 00	NUT	
1050	3	0346 1000 58	CLAMP	
1060	**1**	**2236 0930 00**	**COLLECTOR**	
	4	2236 0398 01 •	NIPPLE	
1070	1	0580 0018 35	STRAIGHT COUPLING	
1080	1	2236 0894 00	PIPE	
1090	1	2236 0877 00	FAN DUCT	
1100	1	1088 0803 26	GROMMET	
1110	**1**	**1622 0801 94**	**FAN ASSEMBLY**	
	1	1613 9800 15 •	FAN MOTOR	
	1	1613 9819 01 •	FAN WHEEL	
1120	4	0147 1963 08	HEXAGON BOLT	
1130	1	1622 0594 09	AIR COOLER	
1140	2	0147 1963 08	HEXAGON BOLT	
1150	1	0580 0015 15	COUPLING	
1160	1	0571 0035 53	NIPPLE	
1165	4	0147 1246 03	HEXAGON BOLT	
1170	4	0301 2321 00	WASHER	
1190	1	0226 0300 41	SCREW	
1200	1	2236 0641 01	GRATING	
1210	4	0226 0300 41	SCREW	
2160	1	1088 1001 01	WARNING MARK	

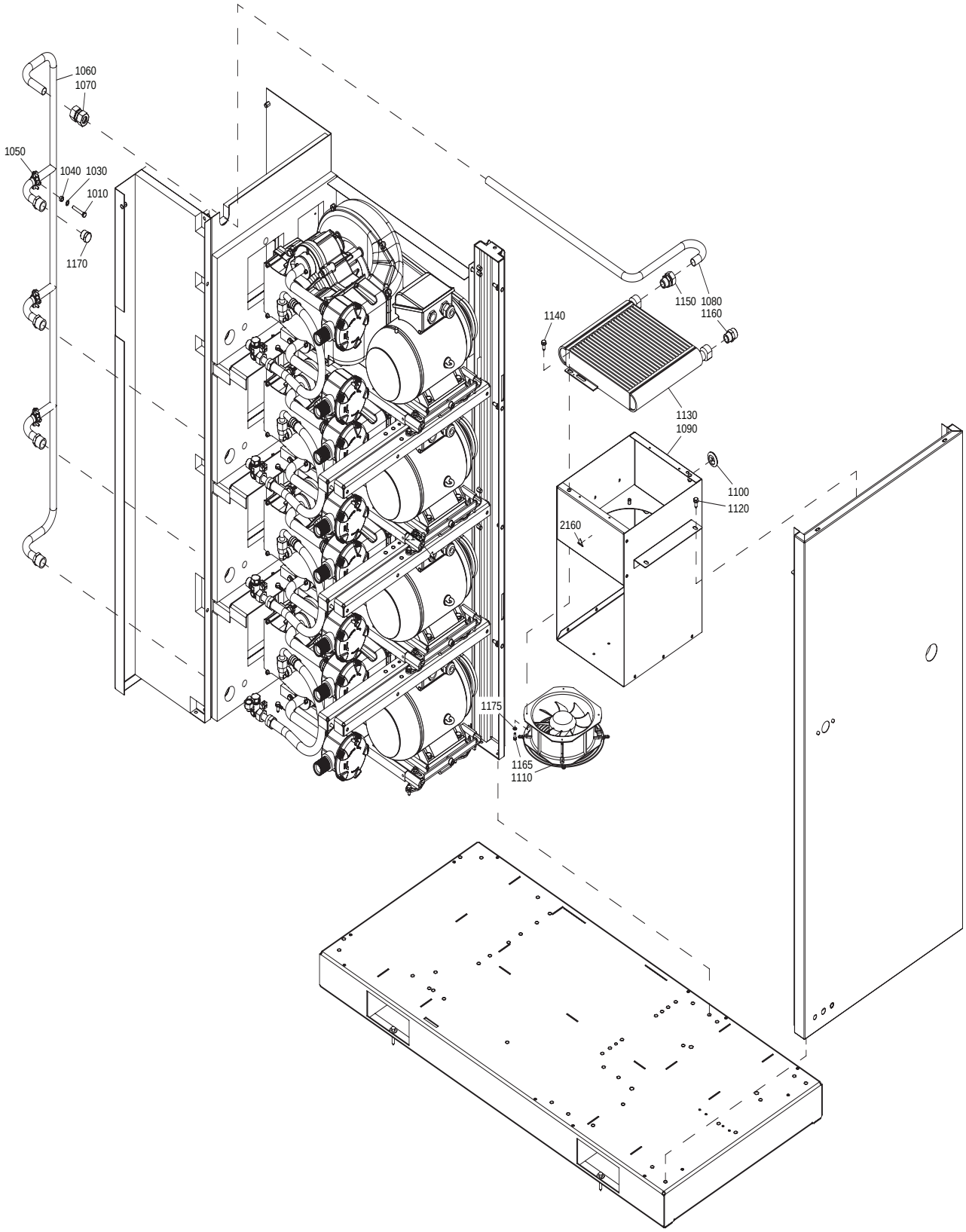

9820 9410 60-01ED00

Item No.	Qty.	Part Number	Description	Remarks
1010	3	0147 1330 12	HEXAGON BOLT	
1030	3	0333 3227 00	LOCKWASHER	
1040	3	0266 2110 00	NUT	
1050	3	0346 1000 58	CLAMP	
1060	**1**	**2236 0930 00**	**COLLECTOR**	
		2236 0398 01 •	NIPPLE	
1070	1	0580 0018 35	STRAIGHT COUPLING	
1080	1	2236 0894 00	PIPE	
1090	1	2236 2230 00	FAN DUCT	
1100	1	1088 0803 26	GROMMET	
1110	1		FAN	
		2236 0487 94	QOF 22 IEC	
		2236 0487 92	QOF 22 UL-CUL	
		2236 0487 94	QOF 30 IEC	
		2236 0487 92	QOF 30 UL-CUL	
1120	4	0147 1963 08	HEXAGON BOLT	
1130	1	1622 0594 09	AIR COOLER	
1140	2	0147 1963 08	HEXAGON BOLT	
1150	1	0580 0015 15	COUPLING	
1160	1	0571 0035 53	NIPPLE	
1165	4	0147 1246 03	HEXAGON BOLT	
1170	1		PLUG	
		0686 3115 65	QOF 22	
1175	4	0301 2321 00	WASHER	
2160	1	1088 1001 01	WARNING MARK	

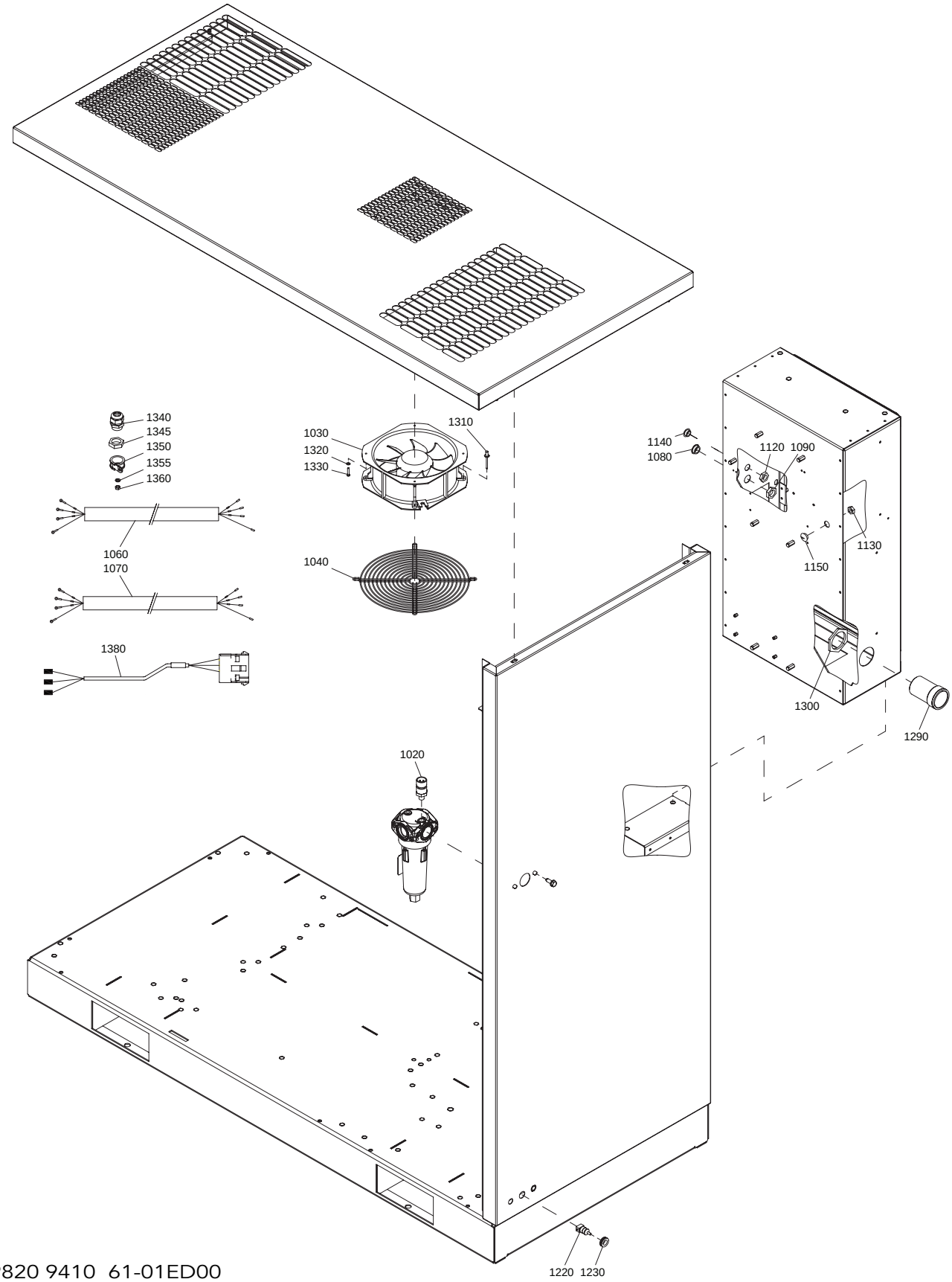

9820 9410 61-01ED00

Item No.	Qty.	Part Number	Description	Remarks
1020	1	1089 0575 54	PRESS.TRANSDUCER	
1030	1	1089 0571 14	FAN	
1040	1	1089 0571 15	GUARD GRILLE	
1060			CABLE	
	3	2236 0107 00	QOF 20 230V/60HZ UL-CUL	
	3	2236 0107 04	QOF 20 400V/50HZ IEC	
	3	2236 0107 04	QOF 20 460V/60HZ UL-CUL	
	2	2236 0107 02	QOF 22 230V/60HZ UL-CUL	
	2	2236 0107 04	QOF 22 400V/50HZ IEC	
	2	2236 0107 04	QOF 22 460V/60HZ UL-CUL	
	3	2236 0107 02	QOF 30 230V/60HZ UL-CUL	
	3	2236 0107 04	QOF 30 400V/50HZ IEC	
	3	2236 0107 04	QOF 30 460V/60HZ UL-CUL	
1070	1		CABLE	
		2236 0107 03	QOF 20 230V/60HZ UL-CUL	
		2236 0107 05	QOF 20 400V/50HZ IEC	
		2236 0107 05	QOF 20 460V/60HZ UL-CUL	
		2236 0107 03	QOF 22 230V/60HZ UL-CUL	
		2236 0107 05	QOF 22 400V/50HZ IEC	
		2236 0107 05	QOF 22 460V/60HZ UL-CUL	
		2236 0107 03	QOF 30 230V/60HZ UL-CUL	
		2236 0107 05	QOF 30 400V/50HZ IEC	
		2236 0107 05	QOF 30 460V/60HZ UL-CUL	
1080	1		PLUG	
		0697 9810 19	QOF 20 230V/60HZ UL-CUL	
		0697 9810 26	QOF 20 400V/50HZ IEC	
		0697 9810 19	QOF 20 460V/60HZ UL-CUL	
		0697 9810 19	QOF 22 230V/60HZ UL-CUL	
		0697 9810 26	QOF 22 400V/50HZ IEC	
		0697 9810 19	QOF 22 460V/60HZ UL-CUL	
		0697 9810 19	QOF 30 230V/60HZ UL-CUL	
		0697 9810 26	QOF 30 400V/50HZ IEC	
		0697 9810 19	QOF 30 460V/60HZ UL-CUL	
1090	1		LOCK NUT	
		0697 9809 02	QOF 20 230V/60HZ UL-CUL	
		0697 9809 21	QOF 20 400V/50HZ IEC	
		0697 9809 02	QOF 20 460V/60HZ UL-CUL	
		0697 9809 02	QOF 22 230V/60HZ UL-CUL	
		0697 9809 21	QOF 22 400V/50HZ IEC	
		0697 9809 02	QOF 22 460V/60HZ UL-CUL	
		0697 9809 02	QOF 30 230V/60HZ UL-CUL	
		0697 9809 21	QOF 30 400V/50HZ IEC	
		0697 9809 02	QOF 30 460V/60HZ UL-CUL	
1120	1		LOCK NUT	
		0697 9809 07	QOF 20 230V/60HZ UL-CUL	
		0697 9809 20	QOF 20 400V/50HZ IEC	
		0697 9809 07	QOF 20 460V/60HZ UL-CUL	
		0697 9809 07	QOF 22 230V/60HZ UL-CUL	
		0697 9809 20	QOF 22 400V/50HZ IEC	
		0697 9809 07	QOF 22 460V/60HZ UL-CUL	
		0697 9809 07	QOF 30 230V/60HZ UL-CUL	
		0697 9809 20	QOF 30 400V/50HZ IEC	
		0697 9809 07	QOF 30 460V/60HZ UL-CUL	
1130	1		LOCK NUT	
		0697 9809 07	QOF 20 230V/60HZ UL-CUL	

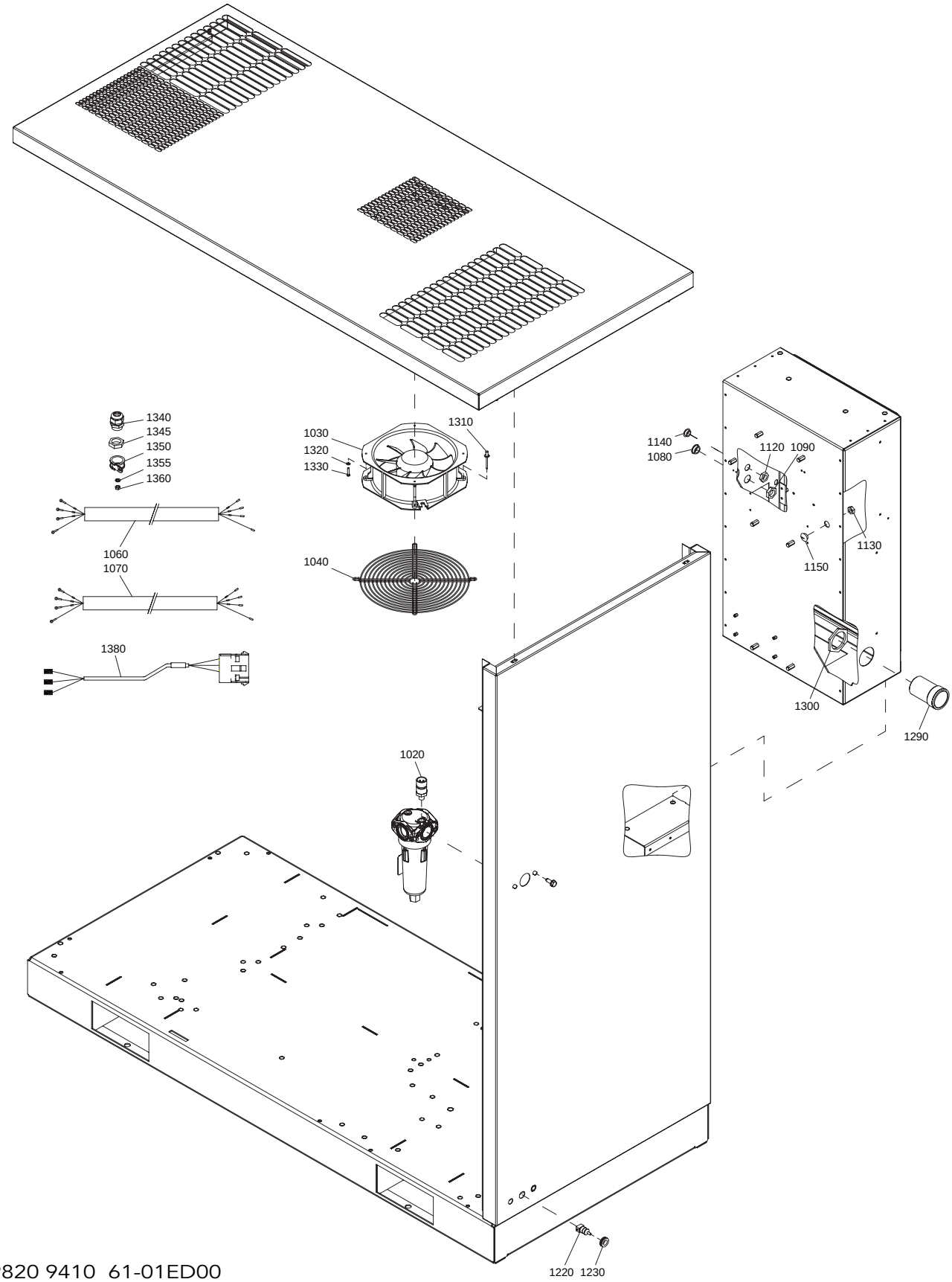

9820 9410 61-01ED00

Item No.	Qty.	Part Number	Description	Remarks
		0697 9809 20	QOF 20 400V/50HZ IEC	
		0697 9809 07	QOF 20 460V/60HZ UL-CUL	
		0697 9809 07	QOF 22 230V/60HZ UL-CUL	
		0697 9809 20	QOF 22 400V/50HZ IEC	
		0697 9809 07	QOF 22 460V/60HZ UL-CUL	
		0697 9809 07	QOF 30 230V/60HZ UL-CUL	
		0697 9809 20	QOF 30 400V/50HZ IEC	
		0697 9809 07	QOF 30 460V/60HZ UL-CUL	
1140	1		PLUG	
		0697 9810 34	QOF 20 230V/60HZ UL-CUL	
		0697 9810 25	QOF 20 400V/50HZ IEC	
		0697 9810 34	QOF 20 460V/60HZ UL-CUL	
		0697 9810 34	QOF 22 230V/60HZ UL-CUL	
		0697 9810 25	QOF 22 400V/50HZ IEC	
		0697 9810 34	QOF 22 460V/60HZ UL-CUL	
		0697 9810 34	QOF 30 230V/60HZ UL-CUL	
		0697 9810 25	QOF 30 400V/50HZ IEC	
		0697 9810 34	QOF 30 460V/60HZ UL-CUL	
1150	1		PLUG	
		0697 9810 34	QOF 20 230V/60HZ UL-CUL	
		0697 9810 25	QOF 20 400V/50HZ IEC	
		0697 9810 34	QOF 20 460V/60HZ UL-CUL	
		0697 9810 34	QOF 22 230V/60HZ UL-CUL	
		0697 9810 25	QOF 22 400V/50HZ IEC	
		0697 9810 34	QOF 22 460V/60HZ UL-CUL	
		0697 9810 34	QOF 30 230V/60HZ UL-CUL	
		0697 9810 25	QOF 30 400V/50HZ IEC	
		0697 9810 34	QOF 30 460V/60HZ UL-CUL	
1220	1	1089 0574 12	TEMP.SENSOR (AMBIENT)	
1230	1	0989 4220 15	GROMMET	
1290	1		ADAPTOR	
		1622 2818 00	IEC	
		1622 2819 00	UL-CUL	
1300	1	1088 0301 35	LOCK NUT	
1310	4	0129 3270 39	RIVET	
1320	4	0301 2315 00	WASHER	
1330	4	0160 6043 00	SCREW	
1340			CABLE GLAND	
	4	0698 5140 73	QOF 20 230V/60HZ UL-CUL	
	3	0698 5140 73	QOF 22 230V/60HZ UL-CUL	
	4	0698 5140 73	QOF 30 230V/60HZ UL-CUL	
1345			LOCK NUT	
	4	0697 9809 22	QOF 20 230V/60HZ UL-CUL	
	3	0697 9809 22	QOF 22 230V/60HZ UL-CUL	
	4	0697 9809 22	QOF 30 230V/60HZ UL-CUL	

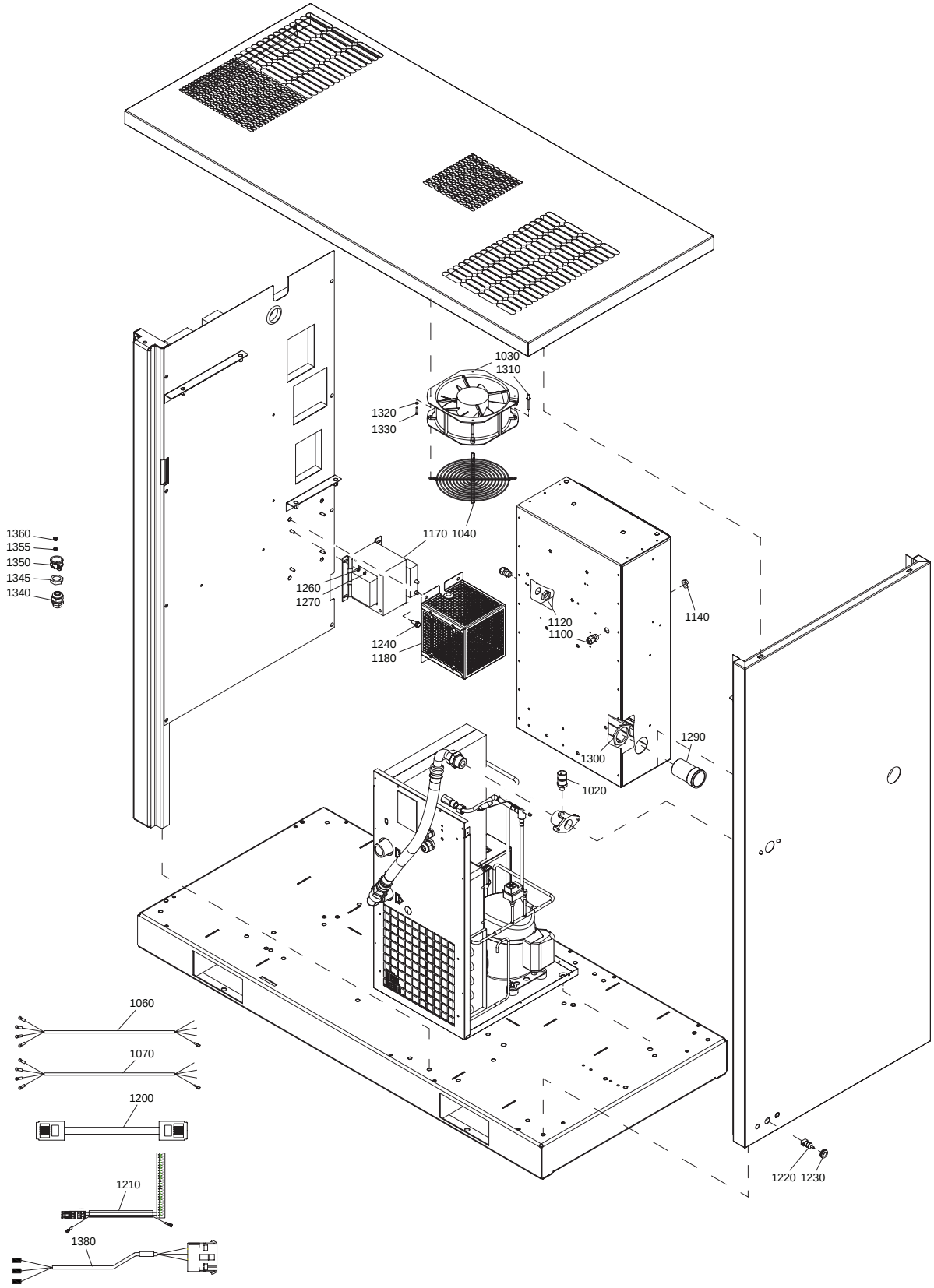

9820 9410 62-01ED00

Item No.	Qty.	Part Number	Description	Remarks
1020	1	1089 0575 54	PRESSURE TRANSDUCER	
1030	1	1089 0571 14	FAN	
1040	1	1089 0571 15	GUARD	
1060			CABLE	
	3	2236 0107 02	QOF 20 230V/60HZ UL-CUL	
	3	2236 0107 04	QOF 20 400V/50HZ IEC	
	3	2236 0107 04	QOF 20 400V+N/50HZ IEC	
	3	2236 0107 04	QOF 20 460V/60HZ UL-CUL	
	2	2236 0107 02	QOF 22 230V/60HZ UL-CUL	
	2	2236 0107 04	QOF 22 400V/50HZ IEC	
	2	2236 0107 04	QOF 22 400V+N/50HZ IEC	
	2	2236 0107 04	QOF 22 460V/60HZ UL-CUL	
	3	2236 0107 02	QOF 30 230V/60HZ UL-CUL	
	3	2236 0107 04	QOF 30 400V/50HZ IEC	
	3	2236 0107 04	QOF 30 400V+N/50HZ IEC	
	3	2236 0107 04	QOF 30 460V/60HZ UL-CUL	
1070	1		CABLE	
		2236 0107 03	QOF 20 230V/60HZ UL-CUL	
		2236 0107 05	QOF 20 400V/50HZ IEC	
		2236 0107 05	QOF 20 400V+N/50HZ IEC	
		2236 0107 05	QOF 20 460V/60HZ UL-CUL	
		2236 0107 03	QOF 22 230V/60HZ UL-CUL	
		2236 0107 05	QOF 22 400V/50HZ IEC	
		2236 0107 05	QOF 22 400V+N/50HZ IEC	
		2236 0107 05	QOF 22 460V/60HZ UL-CUL	
		2236 0107 03	QOF 30 230V/60HZ UL-CUL	
		2236 0107 05	QOF 30 400V/50HZ IEC	
		2236 0107 05	QOF 30 400V+N/50HZ IEC	
		2236 0107 05	QOF 30 460V/60HZ UL-CUL	
1100	1	0698 5140 71	CABLE GLAND	
1120	1	0697 9809 21	LOCK NUT	
1140	1	0697 9809 20	LOCK NUT	
1170	**1**		**DRYER TRAFO ASSEMBLY**	
		1900 2106 03	400V/50HZ	
		1900 2106 03	460V/60HZ	X150
	2	0697 9809 21 •	NUT	
	2	0698 5140 72 •	CABLE GLAND	
	1	1089 9437 52 •	AUTOTRANSFORMER	
	1	1089 9427 14 •	CONNECTOR	
	1		CONNECTOR	
		2236 0442 21	230V/60HZ	
1180	**1**		**COVER**	
		2236 0521 80	400V/50HZ	
		2236 0521 80	460V/60HZ	
	1	•	COVER	
	AR	1503 1056 00 •	SEAL	
1200	1	2236 0742 20	CABLE	2X RJ11
1210	**1**	**1625 8921 01**	**SUPPLY CABLE IO2**	
	1	1088 0039 26 •	CONNECTOR	
	1	1088 0037 84 •	CONNECTOR	
1220	1	1089 0574 12	TEMPERATURE SENSOR	
1230	1	0989 4220 15	GROMMET	
1240	4	0147 1963 08	HEXAGON BOLT	
1260	4	0333 3116 00	LOCKWASHER	

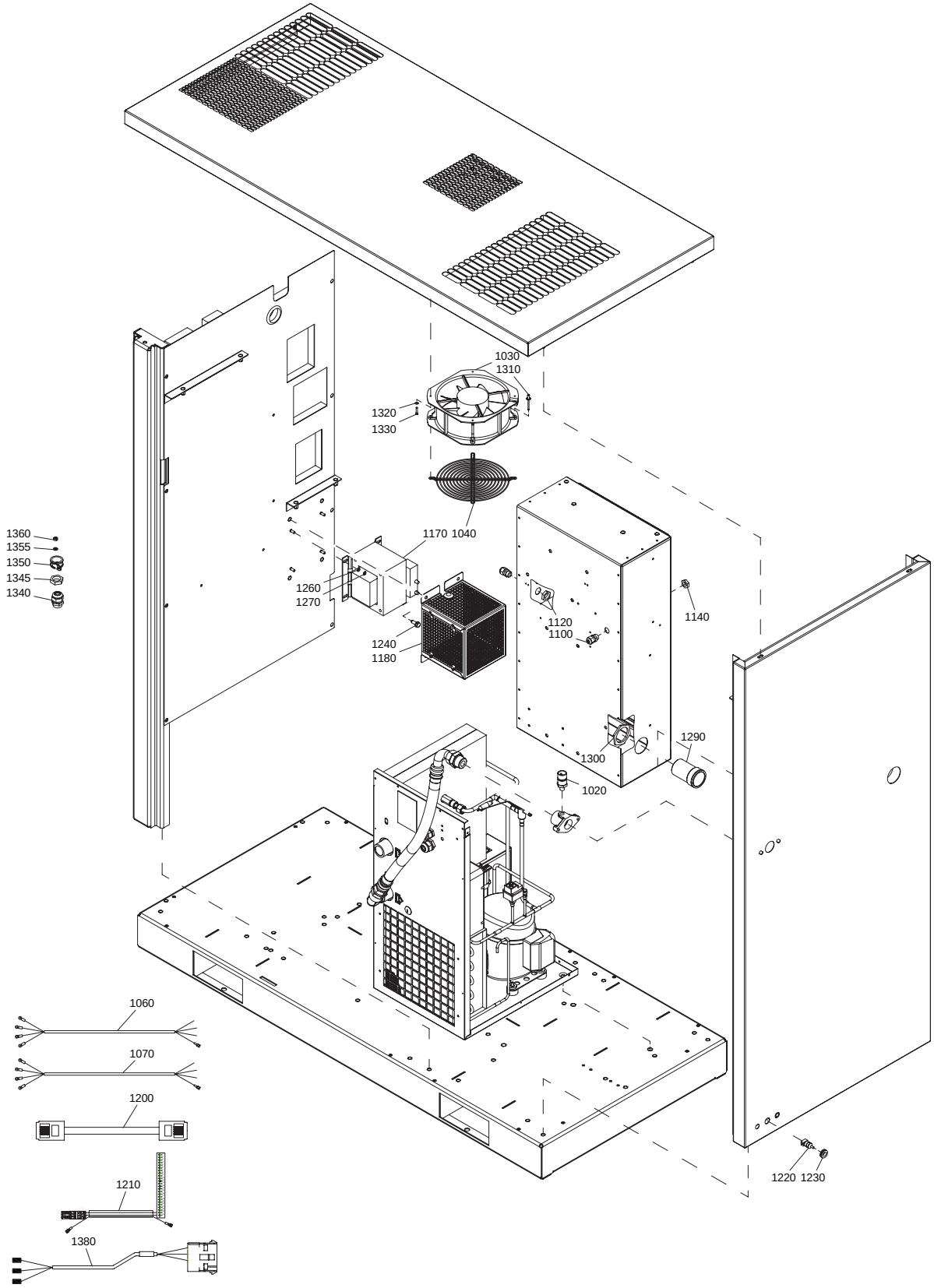

9820 9410 62-01ED00

Item No.	Qty.	Part Number	Description	Remarks
1270	4	0301 2318 00	WASHER	
1290	1		ADAPTOR	
		1622 2818 00	IEC	
		1622 2819 00	UL-CUL	
1300	1	1088 0301 35	LOCK NUT	
1310	4	0129 3270 39	RIVET	
1320	4	0301 2315 00	WASHER	
1330	4	0160 6043 00	SCREW	
1340			CABLE GLAND	
	4	0698 5140 73	QOF 20	
	3	0698 5140 73	QOF 22	
	4	0698 5140 73	QOF 30	
1345			LOCK NUT	
	4	0697 9809 22	QOF 20	
	3	0697 9809 22	QOF 22	
	4	0697 9809 22	QOF 30	

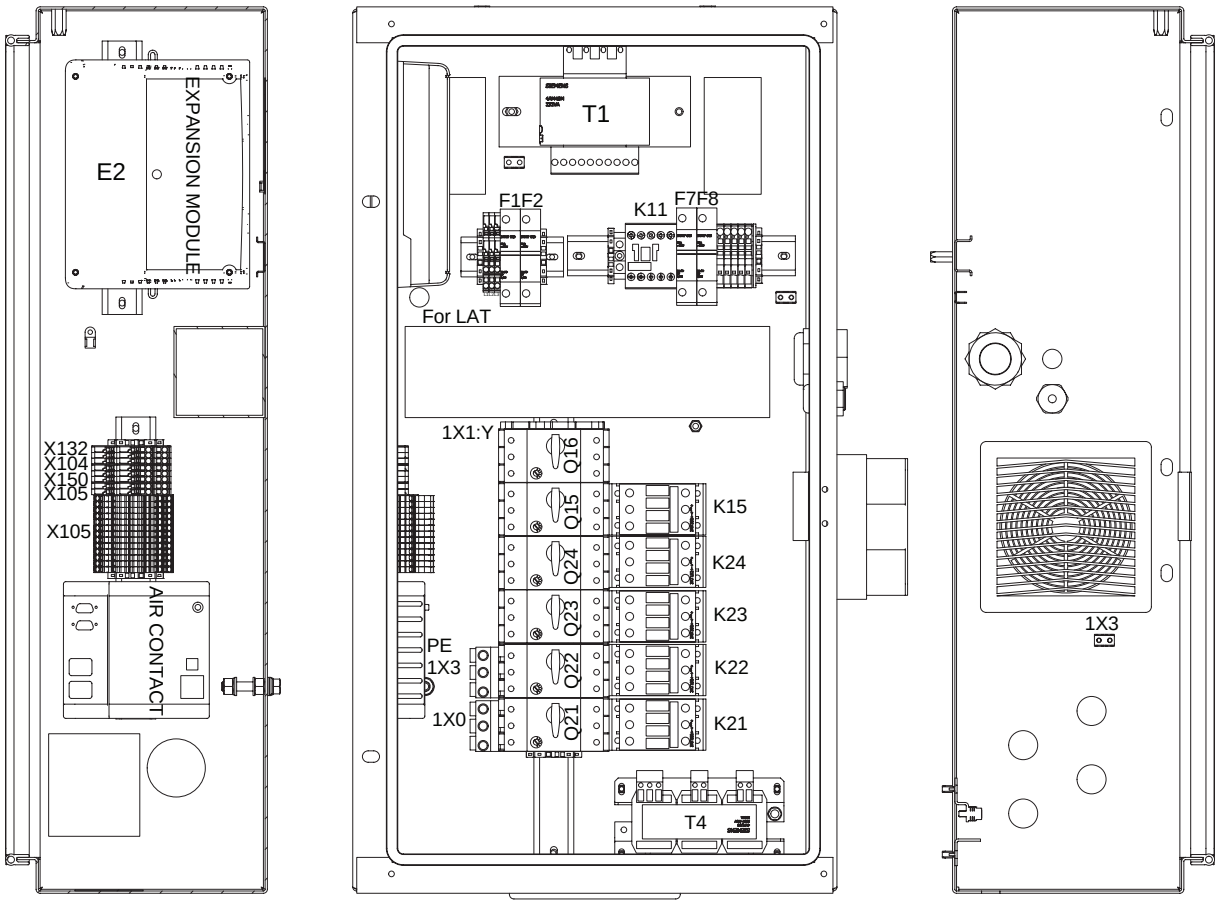

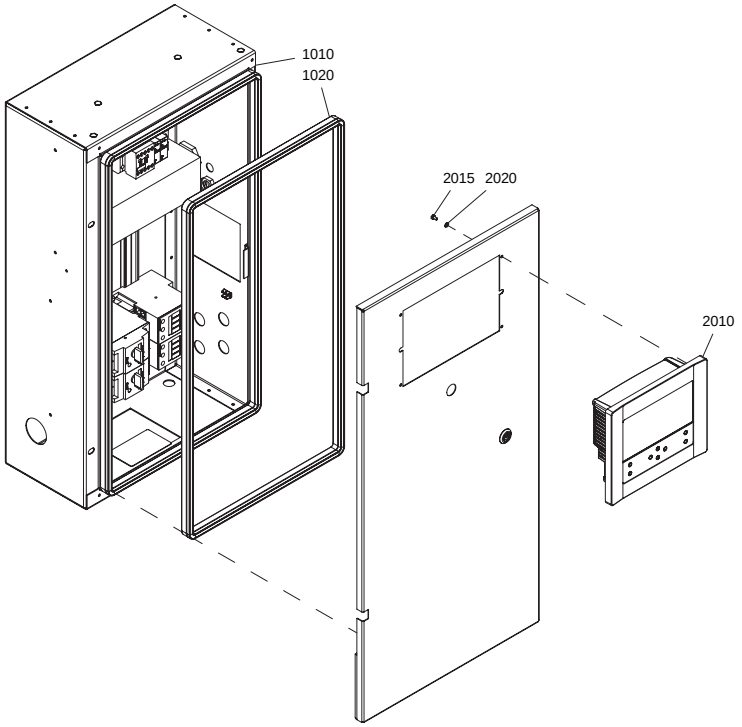

9828 5111 23-01ED00

Item No.	Qty.	Part Number	Description	Remarks
	1		**CUBICLE**	
		1900 2105 02	QOF 20 400V/50HZ IEC	
		1900 2105 05	QOF 22 400V/50HZ IEC	
		1900 2105 08	QOF 30 400V/50HZ IEC	
AD	1	9820 9489 00 •	ASSEMBLY DRAWING	
SD	1	•	SERVICE DIAGRAM	
		9820 4970 21	1900 2105 02	
		9820 4970 06	1900 2105 05	
		9820 4970 06	1900 2105 08	
	1	0697 9809 21 •	NUT	
	1	•	NUT	
		0697 9809 22	1900 2105 05	
	1	0697 9809 24 •	NUT	
	1	•	PLUG	
		0697 9810 27	1900 2105 05	
Q15	1	•	CIRCUIT BREAKER	
		1089 9267 18	1900 2105 05	
		1089 9267 18	1900 2105 08	
Q21/22/23/24				
	4	•	CIRCUIT BREAKER	
		1089 9267 34	1900 2105 02	
		1089 9267 36	1900 2105 08	
Q21/22/23	3	•	CIRCUIT BREAKER	
		1089 9267 36	1900 2105 05	
Q15	1	•	AUX. SWITCH BLOCK	
		1089 9267 55	1900 2105 05	
		1089 9267 55	1900 2105 08	
Q21/22/23	3	•	AUX. SWITCH BLOCK	
		1089 9267 55	1900 2105 05	
Q21/22/23/24				
	4	•	AUX. SWITCH BLOCK	
		1089 9267 55	1900 2105 02	
		1089 9267 55	1900 2105 08	
1X0	1	•	AUX. SWITCH BLOCK	
		1089 9267 61	1900 2105 02	
		1089 9267 61	1900 2105 05	
		1089 9267 61	1900 2105 08	
1X0 - X152	1	1089 9267 61 •	AUX. SWITCH BLOCK	
Q21/22/23	1	•	3PH BRIDGE 3X	
		1089 9416 03	1900 2105 05	
Q21/22/23/24				
	1	•	3PH BRIDGE 4X	
		1089 9416 04	1900 2105 02	
		1089 9416 04	1900 2105 08	
Q-K	1	•	CONNECTION ELEMENT	
		1089 9416 06	1900 2105 05	
		1089 9416 94	1900 2105 08	
Q21/22/23	3	•	CONNECTION ELEMENT	
		1089 9416 06	1900 2105 05	
Q21/22/23/24				
	4	•	CONNECTION ELEMENT	
		1089 9416 06	1900 2105 02	
		1089 9416 06	1900 2105 08	
1X1:Y	1	•	ENDPLATE	
		1089 9427 48	1900 2105 05	

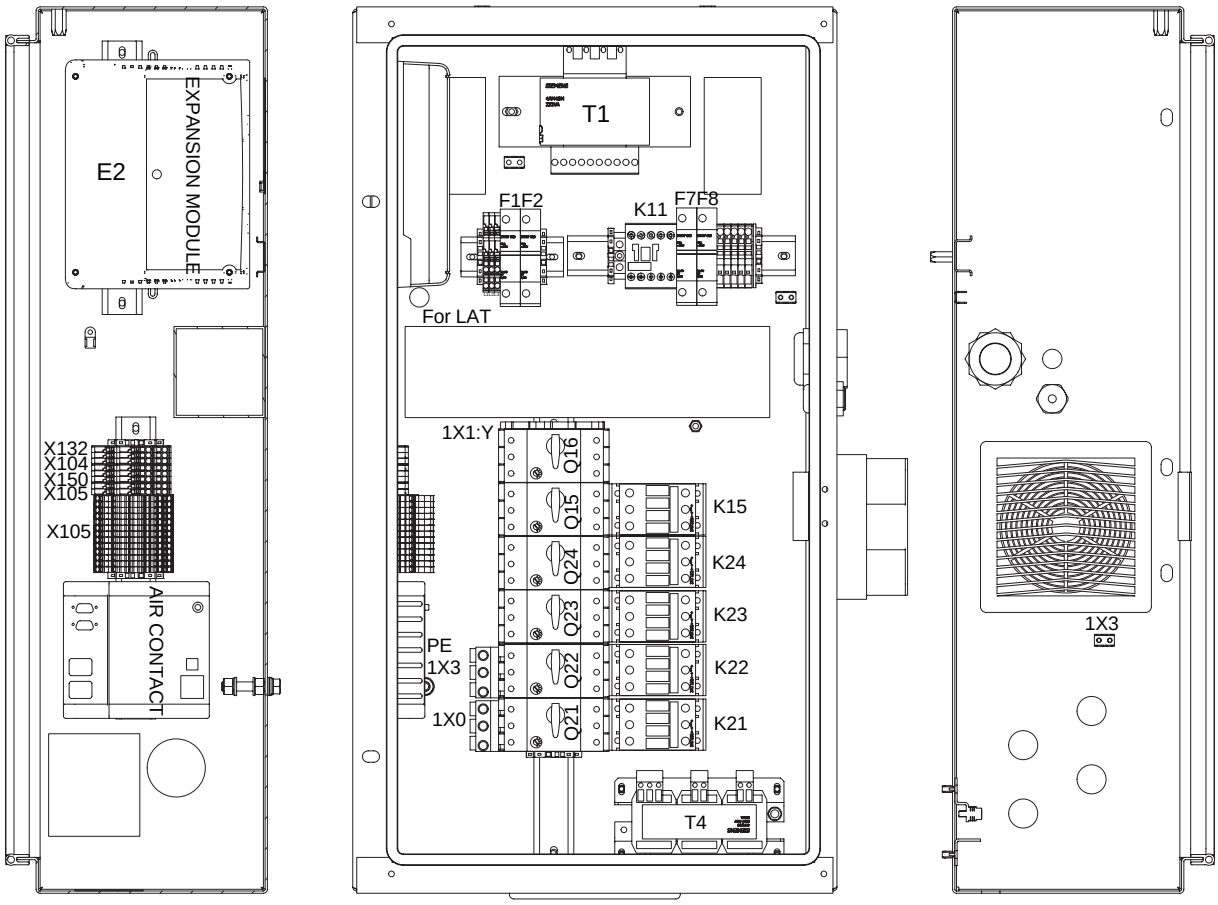

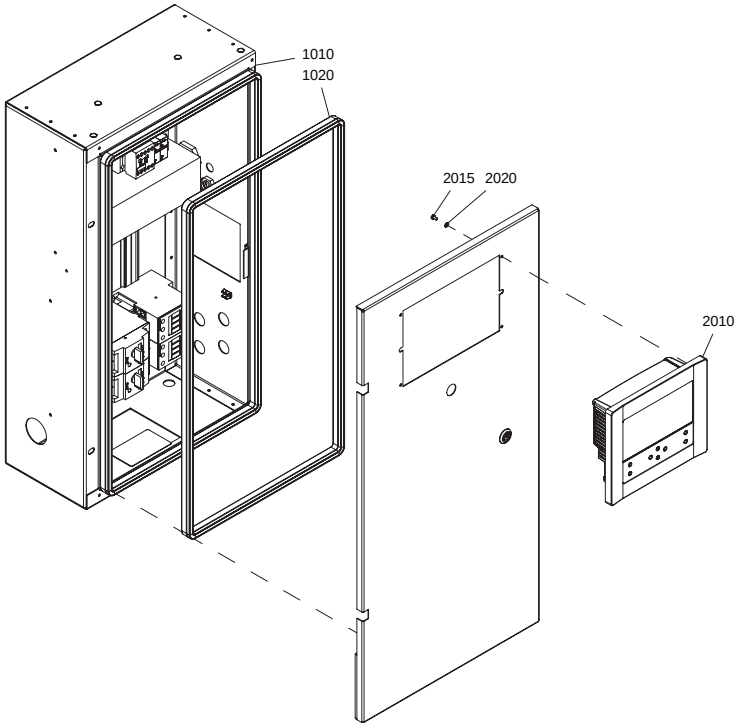

9828 5111 23-01ED00

Item No.	Qty.	Part Number	Description	Remarks
		1089 9427 48	1900 2105 08	
1X1:Y	1	•	TERMINAL	
		1089 9427 49	1900 2105 05	
		1089 9427 49	1900 2105 08	
K15	1	•	CONTACTOR	
		1089 9438 42	1900 2105 05	
		1089 9438 42	1900 2105 08	
Q21/22/23/24				
	4	•	CONTACTOR	
		1089 9438 42	1900 2105 02	
		1089 9438 60	1900 2105 08	
Q21/22/23	3	•	CONTACTOR	
		1089 9438 60	1900 2105 05	
BOTTOM-RIGHT				
	2	1089 9556 05 •	AIR INLET	
M7	1	•	FAN	
		1089 9556 44	1900 2105 05	
WH	1	•	WIRE HARNESS	
		2236 0442 10	1900 2105 02	
		2236 0442 11	1900 2105 05	
		2236 0442 10	1900 2105 08	
WH FAN M5	1	•	WIRE HARNESS	
		2236 0742 21	1900 2105 02	
		2236 0742 00	1900 2105 05	
		2236 0742 00	1900 2105 08	
	1	•	**BASIS MODULE**	
L=395MM	1	0090 1400 02••	MOUNTING RAIL	
L=320MM	1	0991 8011 01••	RACEWAY	
120	1	1079 9925 69••	LABEL	
2X31	1	1088 0031 26••	CONNECTOR	
2X30	1	1088 0031 32••	CONNECTOR	
X104-X132-X150				
	2	1088 0037 15••	TERMINAL	
X104-X132	1	1088 0037 16••	TERMINAL	
X104-X105-X132-X150				
	3	1088 0037 17••	ENDPLATE	
X104-X105-X132-X150				
	4	1088 0037 99••	CODING KEY	
X104-X105-X132-X150				
	5	1088 0038 18••	TERMINAL	
1X4-1X6-1X710		1088 0039 93••	TERMINAL	
1X4-1X6	3	1088 0039 94••	TERMINAL	
1X4-1X6-1X76		1088 0039 95••	ENDPLATE	
-	5	1089 0577 58••	END RETAINER	
S3	1	1089 0649 03••	EMERGENCY STOP BUTTON	
S3	2	1089 9337 13••	CONTACT BLOCK	
X152	3	1089 9427 06••	TERMINAL	
X152	1	1089 9427 07••	ENDPLATE	
X152:3	2	1089 9427 15••	CODING KEY	
110	1	1622 7302 00••	DATA-LABEL	
L=265MM	1	9139 5000 16••	MOUNTING RAIL	
		•	**TRANSFO MODULE**	
		1T1M03150B	1900 2105 02	
		1T1M02500B	1900 2105 05	
		1T1M02500B	1900 2105 08	

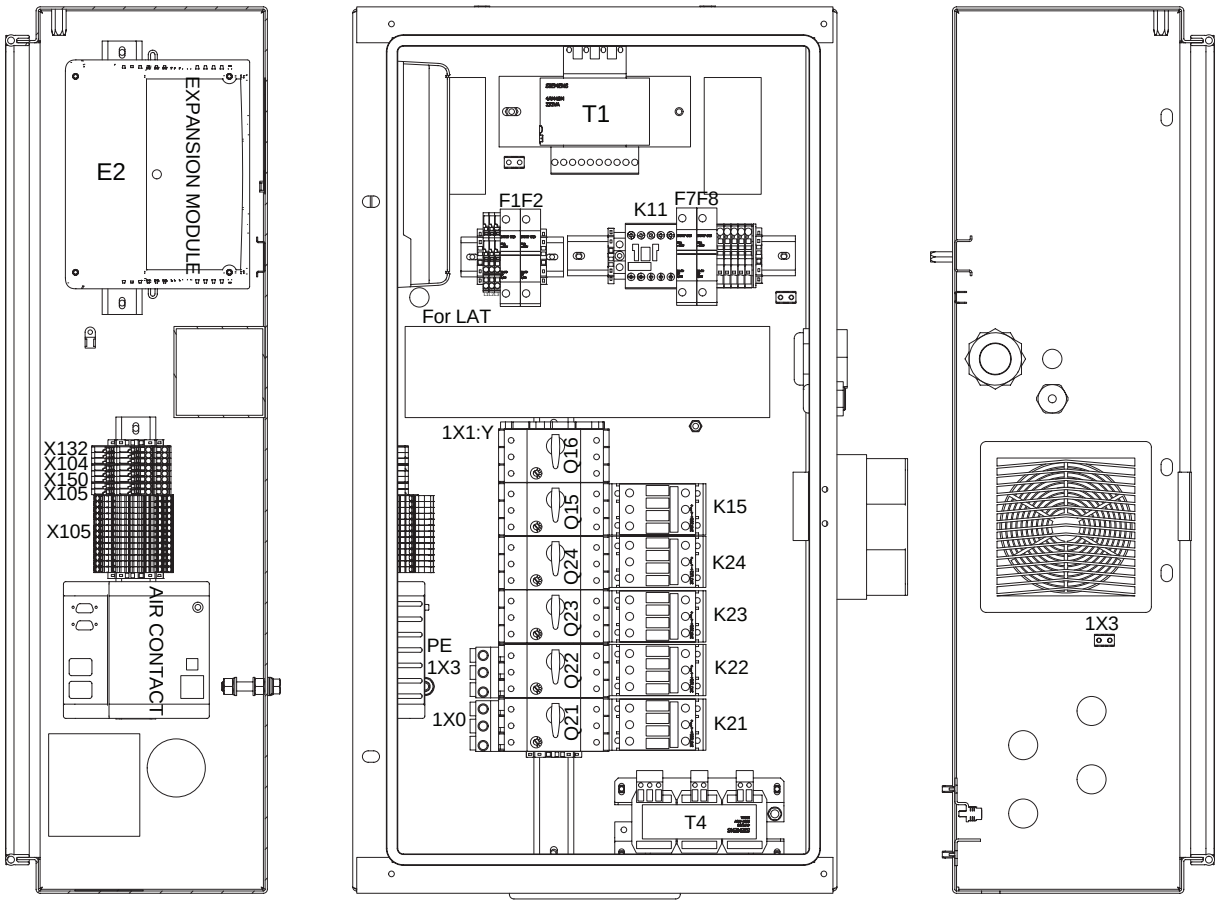

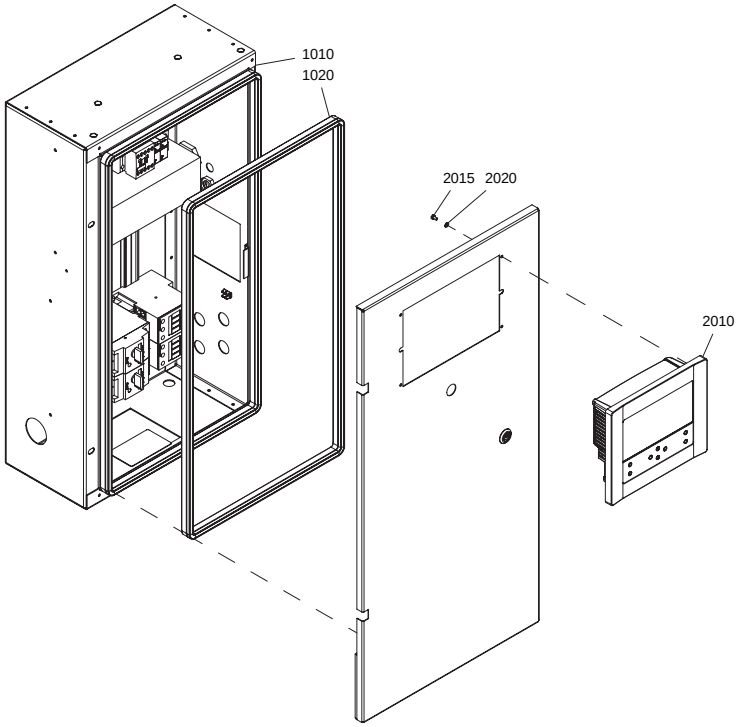

9828 5111 23-01ED00

Item No.	Qty.	Part Number	Description	Remarks
-	1	1089 0577 58••	END RETAINER	
F1-F2	2	1089 0612 01••	FUSE HOLDER	
F1-F2	2	1089 0612 24••	FUSE	
T1	1	••	TRANSFORMER	
		1089 9514 44	1900 2105 02	
		1089 9514 60	1900 2105 05	
		1089 9514 60	1900 2105 08	
	1	**2236 0854 80 •**	**CUBICLE BOX ASSEMBLY**	
1010	1	••	CUBICLE	
1020	AR	1202 6584 00••	SEAL	
	1		**DRYER RAIL**	
		1900 2106 01	QOF 20 W/DRYER, QOF 22 W/DRYER, QOF 30 W/DRYER	
AD	1	9820 9489 01 •	ASSEMBLY DRAWING	
X104	1	1088 0039 26 •	CONNECTOR	
1X2:N	1	1088 0061 14 •	TERMINAL	
1X2:N	1	1088 0040 30 •	ENDPLATE	
-	2	1089 0577 58 •	END RETAINER	
F7-F8	2	1089 0612 01 •	FUSE HOLDER	
F7-F8	2	1089 0612 28 •	FUSE	
K11	1	1089 9415 16 •	CONTACTOR	
X114	5	1089 9427 08 •	TERMINAL	
X114	1	1089 9427 09 •	ENDPLATE	
X152	1	1089 9427 12 •	CONNECTOR	
	1	0090 1400 02 •	MOUNTING RAIL	L=200
2010	1	1900 5200 82	CONTROLLER	
			AIRLOGIC	
2030	4	0147 1169 03	HEXAGON BOLT	
2040	4	0301 2315 00	WASHER	
E2	1		EXPANSION MODULE IO2	
		1900 5200 33	QOF 20 W/DRYER, QOF 22 W/DRYER, QOF 30 W/DRYER	

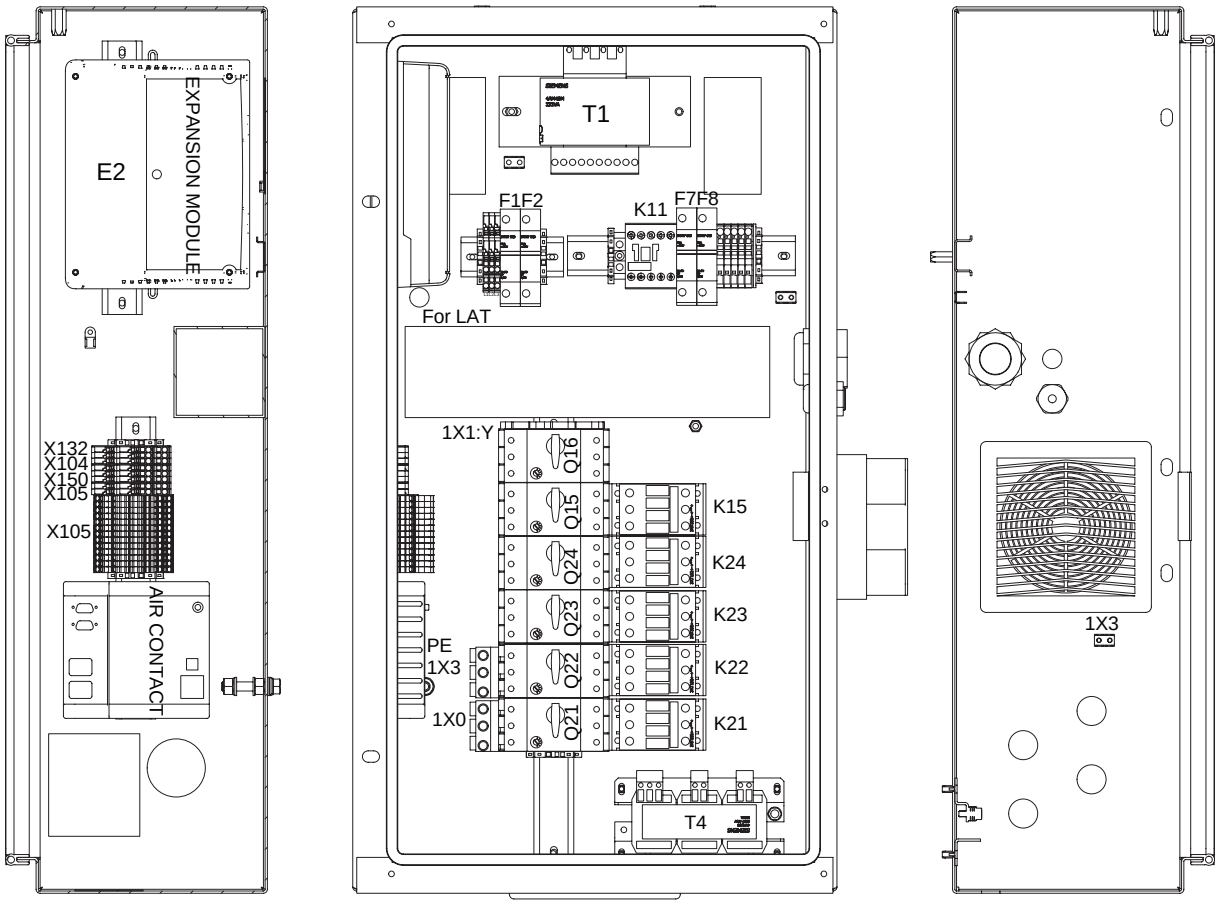

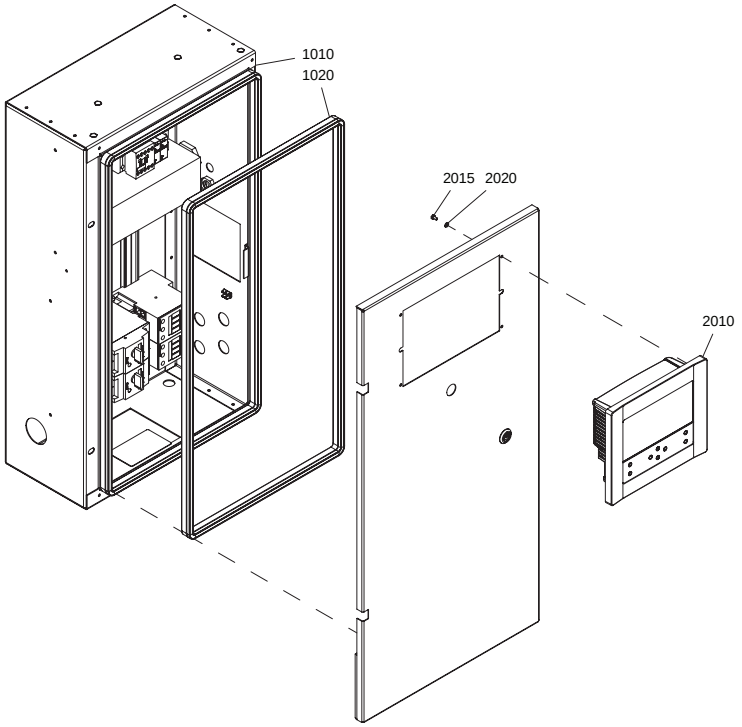

9828 5111 23-01ED00

Item No.	Qty.	Part Number	Description	Remarks
	1		**CUBICLE**	
		1900 2105 09	QOF 20 230V/60HZ UL-CUL PACK	
		1900 2105 09	QOF 20 230V/60HZ UL-CUL FULL FEATURE	
		1900 2105 10	QOF 20 460V/60HZ UL-CUL PACK	
		1900 2105 10	QOF 20 460V/60HZ UL-CUL FULL FEATURE	
		1900 2105 12	QOF 22 230V/60HZ UL-CUL PACK	
		1900 2105 12	QOF 22 230V/60HZ UL-CUL FULL FEATURE	
		1900 2105 13	QOF 22 460V/60HZ UL-CUL PACK	
		1900 2105 13	QOF 22 460V/60HZ UL-CUL FULL FEATURE	
		1900 2105 16	QOF 30 230V/60HZ UL-CUL PACK	
		1900 2105 16	QOF 30 230V/60HZ UL-CUL FULL FEATURE	
		1900 2105 17	QOF 30 460V/60HZ UL-CUL PACK	
		1900 2105 17	QOF 30 460V/60HZ UL-CUL FULL FEATURE	
AD	1	9820 9489 00 •	ASSEMBLY DRAWING	
SD	1	•	SERVICE DIAGRAM	
		9820 4970 21	1900 2105 09	
		9820 4970 21	1900 2105 10	
		9820 4970 06	1900 2105 12	
		9820 4970 06	1900 2105 13	
		9820 4970 06	1900 2105 16	
		9820 4970 06	1900 2105 17	
L=395MM	1	•	MOUNTING RAIL	
		0090 1400 02	1900 2105 12	
		0090 1400 02	1900 2105 16	
	1	•	NUT	
		0697 9809 03	1900 2105 12	
		0697 9809 03	1900 2105 13	
	1	0697 9809 21 •	NUT	
	1	0697 9809 24 •	NUT	
	1	•	PLUG	
		0697 9810 20	1900 2105 12	
		0697 9810 20	1900 2105 13	
Q15	1	•	CIRCUIT BREAKER	
		1089 9267 19	1900 2105 12	
		1089 9267 21	1900 2105 13	
		1089 9267 19	1900 2105 16	
		1089 9267 21	1900 2105 17	
Q21/22/23/24				
	4	•	CIRCUIT BREAKER	
		1089 9267 37	1900 2105 09	
		1089 9267 33	1900 2105 10	
		1089 9267 54	1900 2105 17	
Q21/22/23	3	•	CIRCUIT BREAKER	
		1089 9267 54	1900 2105 13	
Q15	1	•	AUX. SWITCH BLOCK	
		1089 9267 55	1900 2105 12	
		1089 9267 55	1900 2105 13	
		1089 9267 55	1900 2105 16	
		1089 9267 55	1900 2105 17	
Q21/22/23	3	•	AUX. SWITCH BLOCK	
		1089 9267 55	1900 2105 12	
		1089 9267 55	1900 2105 13	
Q21/22/23/24				
	4	•	AUX. SWITCH BLOCK	
		1089 9267 55	1900 2105 09	
		1089 9267 55	1900 2105 10	
		1089 9267 55	1900 2105 16	

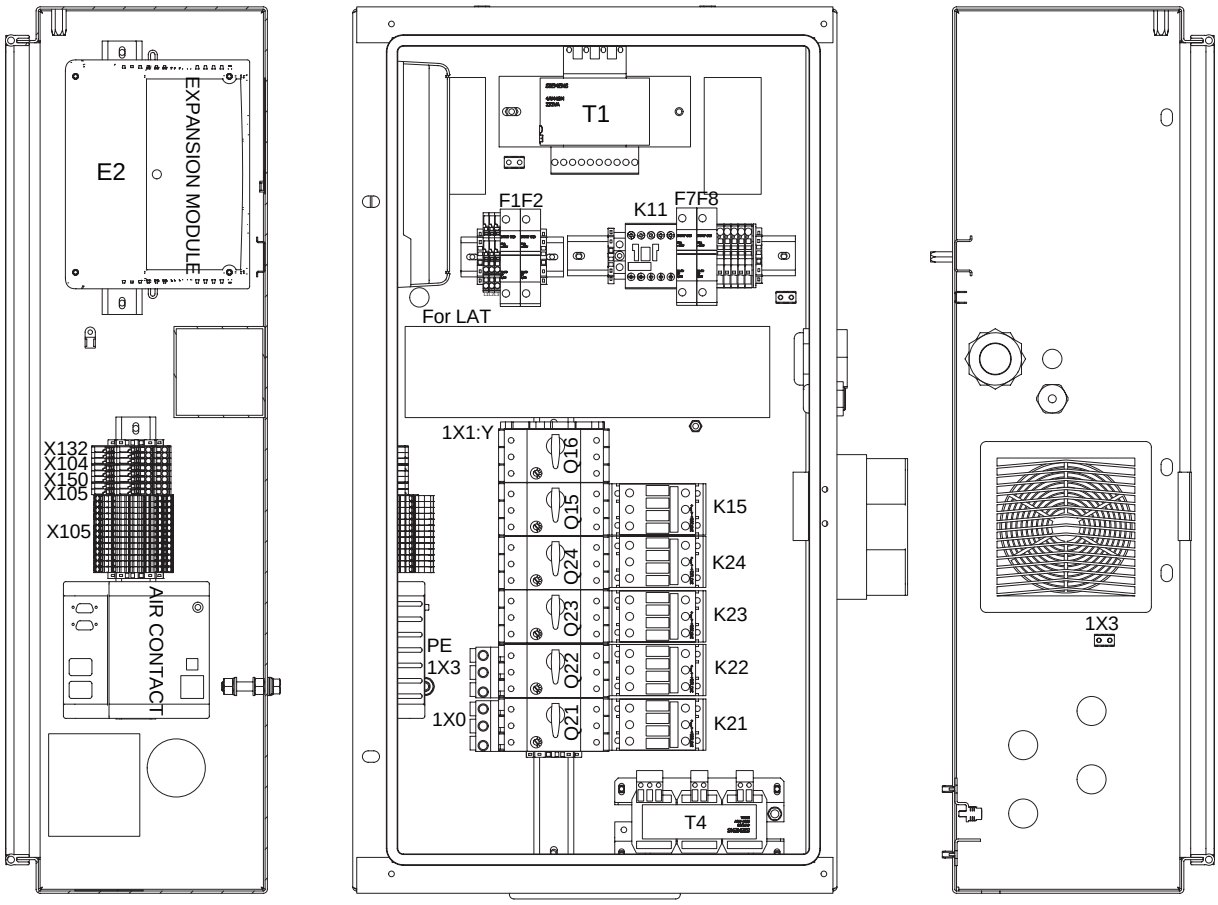

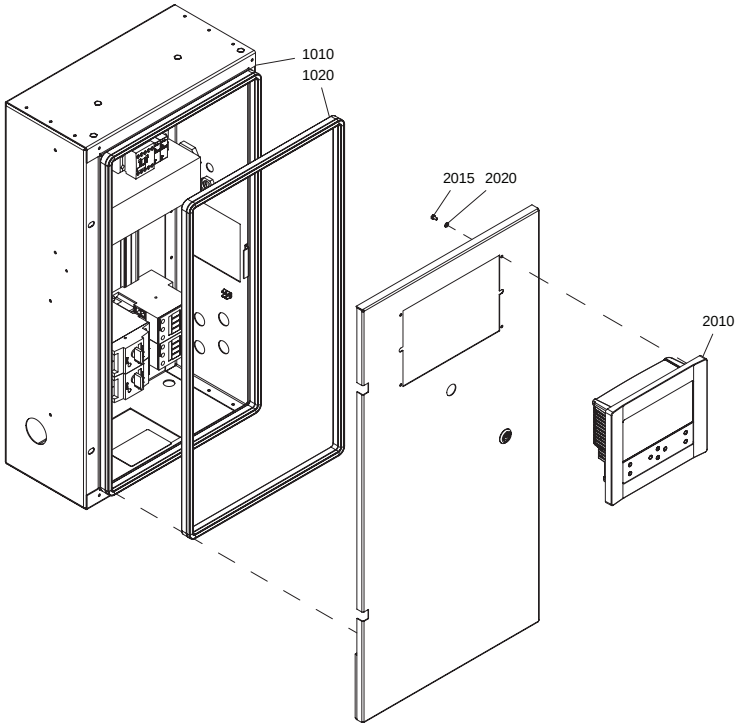

9828 5111 23-01ED00

Item No.	Qty.	Part Number	Description	Remarks
		1089 9267 55	1900 2105 17	
1X0	1	•	AUX. SWITCH BLOCK	
		1089 9267 61	1900 2105 09	
		1089 9267 61	1900 2105 10	
		1089 9267 61	1900 2105 13	
		1089 9267 61	1900 2105 17	
1X0 - X152	1	•	AUX. SWITCH BLOCK	
		1089 9267 61	1900 2105 09	
		1089 9267 61	1900 2105 10	
		1089 9267 61	1900A 2105 13	
		1089 9267 61	1900 2105 17	
Q15	1	•	CONNECTION BLOCK	
		1089 9267 62	1900 2105 12	
		1089 9267 62	1900 2105 13	
		1089 9267 62	1900 2105 16	
		1089 9267 62	1900 2105 17	
Q21/22/23	3	•	LINK MODULE	
		1089 9267 63	1900 2105 13	
Q21/22/23/24	4	•	LINK MODULE	
		1089 9267 63	1900 2105 09	
		1089 9267 63	1900 2105 17	
K21/22/23	3	•	CONTACTOR	
		1089 9415 34	1900 2105 12	
		1089 9438 66	1900 2105 13	
K21/22/23/24	4	•	CONTACTOR	
		1089 9438 76	1900 2105 09	
		1089 9438 54	1900 2105 10	
		1089 9415 34	1900 2105 16	
		1089 9438 66	1900 2105 17	
Q21/22/23	1	•	3PH BRIDGE 3X	
		1089 9656 02	1900 2105 12	
		1089 9416 03	1900 2105 13	
Q21/22/23/24	1	•	3PH BRIDGE 4X	
		1089 9416 04	1900 2105 09	
		1089 9416 04	1900 2105 10	
		1089 9656 03	1900 2105 16	
		1089 9416 04	1900 2105 17	
Q21/22/23/24	4	•	CONNECTION ELEMENT	
		1089 9416 06	1900 2105 10	
Q21/22/23	3	•	CIRCUIT BREAKER	
		1089 9416 83	1900 2105 12	
Q21/22/23/24	4	•	CIRCUIT BREAKER	
		1089 9416 83	1900 2105 16	
Q21/22/23	3	•	CONNECTION ELEMENT	
		1089 9416 90	1900 2105 12	
1X0	1	•	3PH TERMINAL BLOCK	
		1089 9416 93	1900 2105 12	
		1089 9416 93	1900 2105 16	
1X0 - X152	1	•	3PH TERMINAL BLOCK	
		1089 9416 93	1900 2105 12	
		1089 9416 93	1900 2105 16	
Q-K	1	•	CONNECTION ELEMENT	

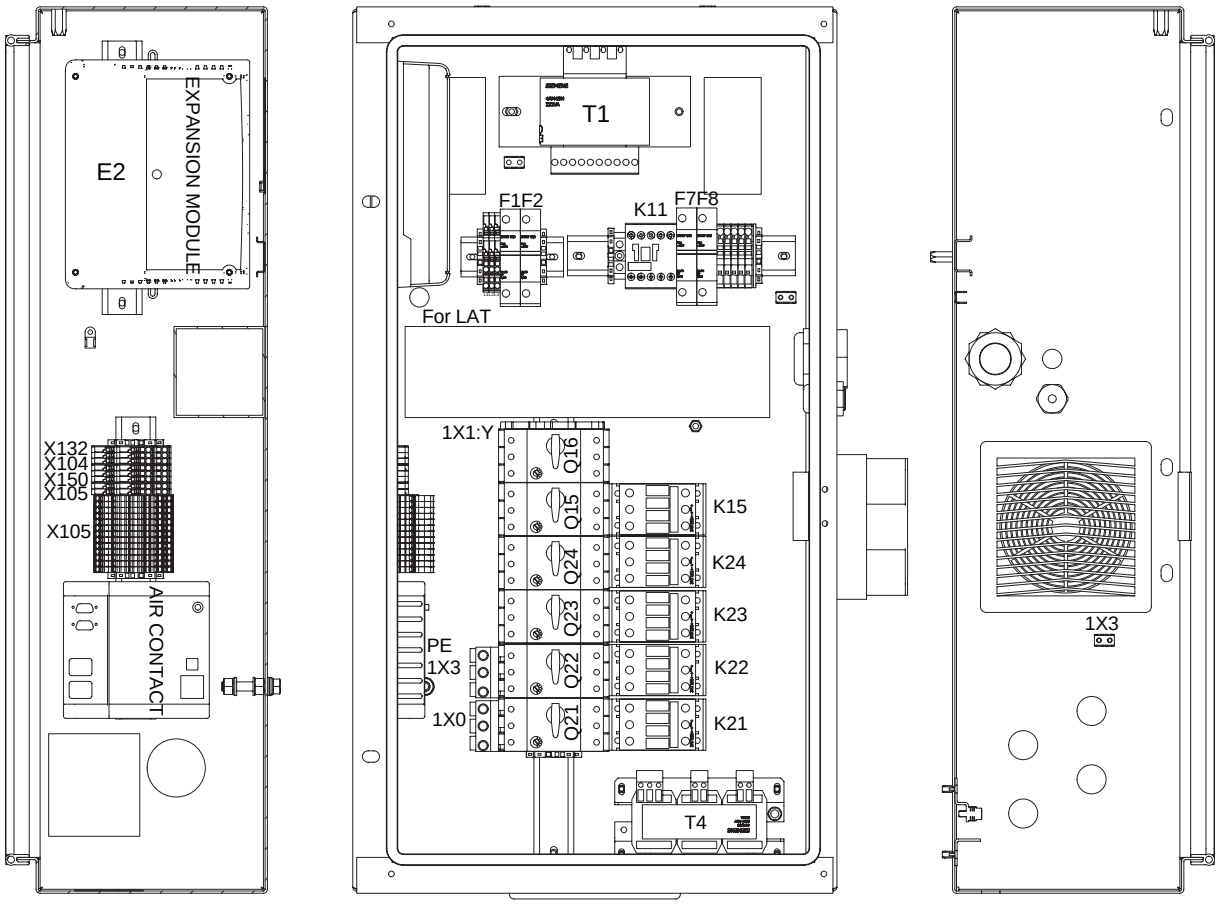

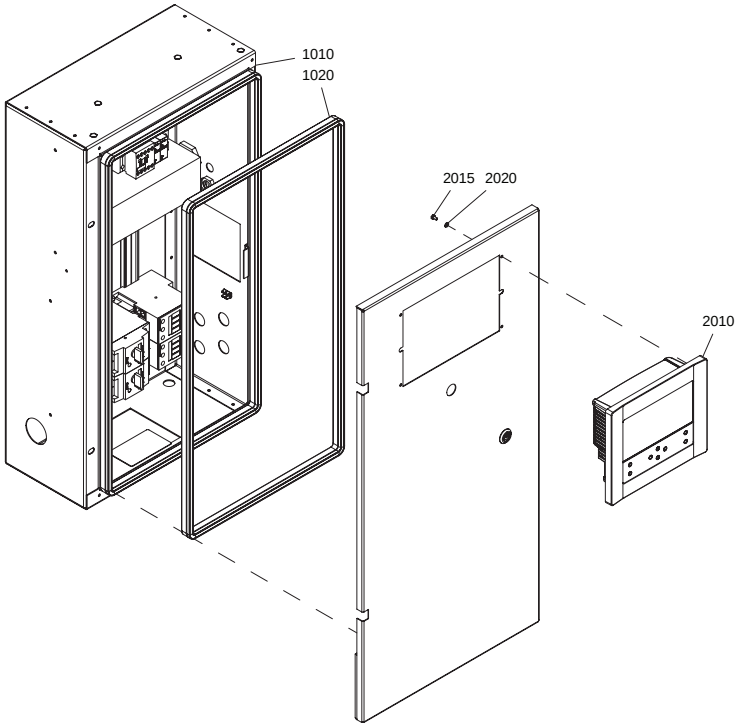

9828 5111 23-01ED00

Item No.	Qty.	Part Number	Description	Remarks
		1089 9427 48	1900 2105 12	
		1089 9427 48	1900 2105 13	
		1089 9427 48	1900 2105 16	
		1089 9427 48	1900 2105 17	
1X1:Y	1	•	ENDPLATE	
		1089 9427 48	1900 2105 12	
		1089 9427 48	1900 2105 13	
		1089 9427 48	1900 2105 16	
		1089 9427 48	1900 2105 17	
1X1:Y	1	•	TERMINAL	
		1089 9427 49	1900 2105 12	
		1089 9427 49	1900 2105 13	
		1089 9427 49	1900 2105 16	
		1089 9427 49	1900 2105 17	
K15	1	•	CONTACTOR	
		1089 9438 42	1900 2105 12	
		1089 9438 42	1900 2105 13	
		1089 9438 42	1900 2105 16	
		1089 9438 42	1900 2105 17	
BOTTOM	1	•	AIR INLET	
		1089 9556 05	1900 2105 09	
		1089 9556 05	1900 2105 12	
		1089 9556 05	1900 2105 16	
BOTTOM-RIGHT				
	2	•	AIR INLET	
		1089 9556 05	1900 2105 10	
		1089 9556 05	1900 2105 13	
		1089 9556 05	1900 2105 17	
M7	1	•	FAN	
		1089 9556 44	1900 2105 12	
		1089 9556 44	1900 2105 16	
WH	1	•	WIRE HARNESS	
		2236 0442 10	1900 2105 09	
		2236 0442 10	1900 2105 10	
		2236 0442 11	1900 2105 12	
		2236 0442 11	1900 2105 13	
		2236 0442 10	1900 2105 16	
		2236 0442 10	1900 2105 17	
WH FAN M5	1	•	WIRE HARNESS	
		2236 0742 21	1900 2105 09	
		2236 0742 21	1900 2105 10	
		2236 0742 00	1900 2105 12	
		2236 0742 00	1900 2105 13	
		2236 0742 00	1900 2105 16	
		2236 0742 00	1900 2105 17	
WH FAN M7	1	•	WIRE HARNESS	
		2236 0742 01	1900 2105 09	
		2236 0742 01	1900 2105 12	
		2236 0742 01	1900 2105 16	
	1	•	**BASIS MODULE**	
L=395MM	1	0090 1400 02••	MOUNTING RAIL	
L=320MM	1	0991 8011 01••	RACEWAY	
120	1	1079 9925 69••	LABEL	
2X31	1	1088 0031 26••	CONNECTOR	
2X30	1	1088 0031 32••	CONNECTOR	
X104-X132-X150				
	2	1088 0037 15••	TERMINAL	

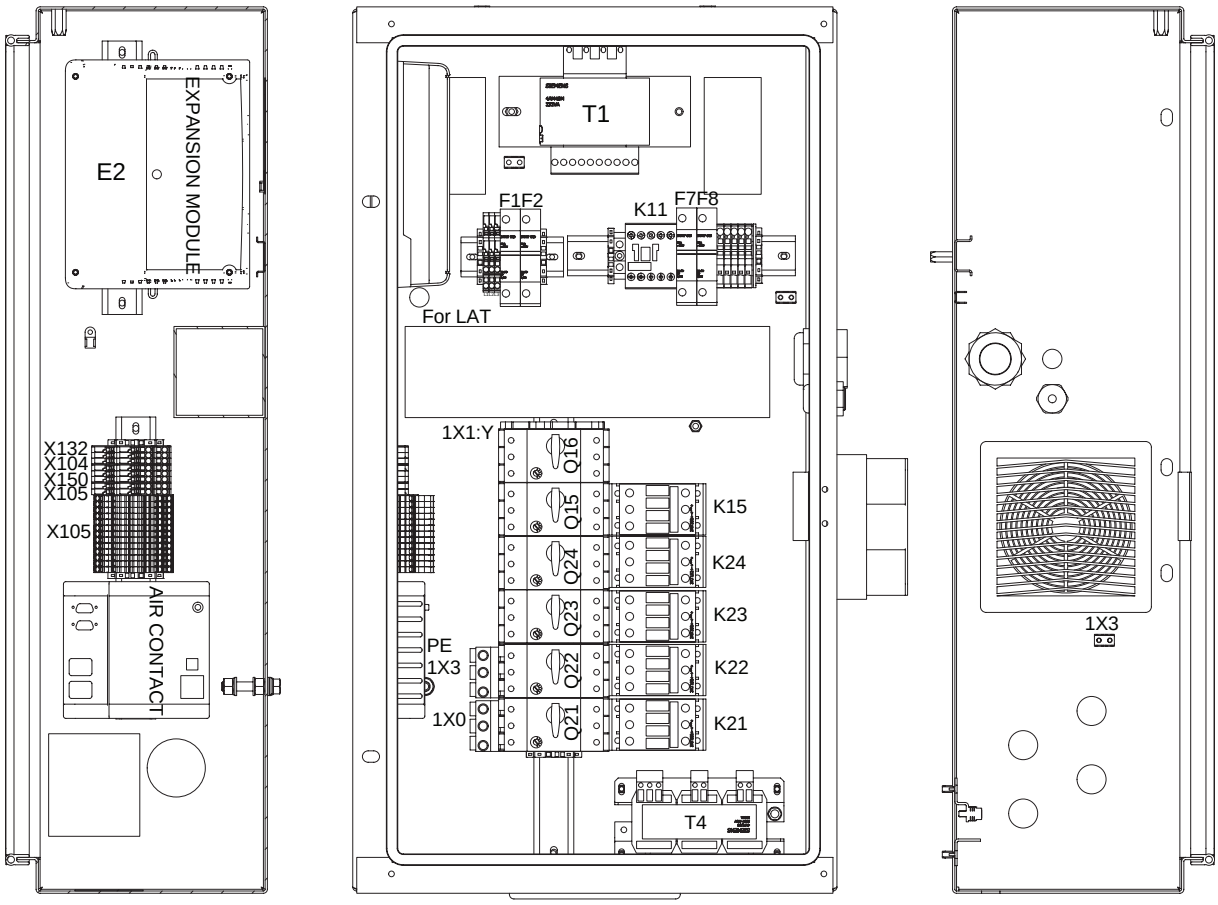

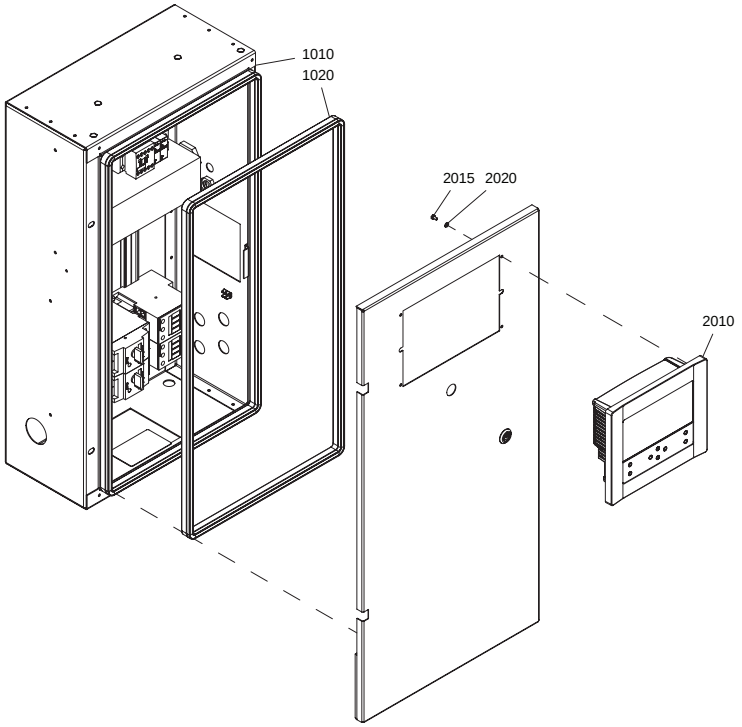

9828 5111 23-01ED00

Item No.	Qty.	Part Number	Description	Remarks
X104-X132	1	1088 0037 16••	TERMINAL	
X104-X105-X132-X150				
	3	1088 0037 17••	ENDPLATE	
X104-X105-X132-X150				
	4	1088 0037 99••	CODING KEY	
X104-X105-X132-X150				
	5	1088 0038 18••	TERMINAL	
1X4-1X6-1X710		1088 0039 93••	TERMINAL	
1X4-1X6	3	1088 0039 94••	TERMINAL	
1X4-1X6-1X76		1088 0039 95••	ENDPLATE	
	5	1089 0577 58••	END RETAINER	
S3	1	1089 0649 03••	EMERGENCY STOP BUTTON	
S3	2	1089 9337 13••	CONTACT BLOCK	
X152	3	1089 9427 06••	TERMINAL	
X152	1	1089 9427 07••	ENDPLATE	
X152:3	2	1089 9427 15••	CODING KEY	
110	1	1622 7302 00••	DATA-LABEL	
L=265MM	1	9139 5000 16••	MOUNTING RAIL	
		•	**TRANSFO MODULE**	
		1T1C03150B	1900 2105 09	
		1T1C02500B	1900 2105 10	
		1T1C03150B	1900 2105 12	
		1T1C02500B	1900 2105 13	
		1T1C03150B	1900 2105 16	
		1T1C02500B	1900 2105 17	
180	1	1079 9924 26••	LABEL	
-	1	1089 0577 58••	END RETAINER	
F1-F2	2	1089 0612 01••	FUSE HOLDER	
F1-F2	2	1089 9168 26••	FUSE LINK	
T1	1	••	TRANSFORMER	
		1089 9514 44	1900 2105 09	
		1089 9514 60	1900 2105 10	
		1089 9514 44	1900 2105 12	
		1089 9514 60	1900 2105 13	
		1089 9514 44	1900 2105 16	
		1089 9514 60	1900 2105 17	
	1	**2236 0854 80** •	**CUBICLE BOX ASSEMBLY**	
1010	1	••	CUBICLE	
1020	AR	1202 6584 00••	SEAL	
	1		**DRYER RAIL**	
		1900 2106 02	QOF 20 W/DRYER, QOF 22 W/DRYER, QOF 30 W/DRYER	
AD	1	9820 9489 01•	ASSEMBLY DRAWING	
181	1	1079 9924 71•	LABEL	
X104	1	1088 0039 26•	CONNECTOR	
-	2	1089 0577 58•	END RETAINER	
F7-F8	2	1089 0612 02•	FUSE HOLDER	
F7-F8	2	1089 9168 62•	FUSE LINK	
K11	1	1089 9415 16•	CONTACTOR	
X114	5	1089 9427 08•	TERMINAL	
X114	1	1089 9427 09•	ENDPLATE	
X152	1	1089 9427 12•	CONNECTOR	
	1	0090 1400 02•	MOUNTING RAIL	
2010	1	1900 5200 82	CONTROLLER	
			AIRLOGIC	
2030	4	0147 1169 03	HEXAGON BOLT	
2040	4	0301 2315 00	WASHER	
E2	1		EXPANSION MODULE IO2	
		1900 5200 32	QOF 20 W/DRYER, QOF 22 W/DRYER, QOF 30 W/DRYER	

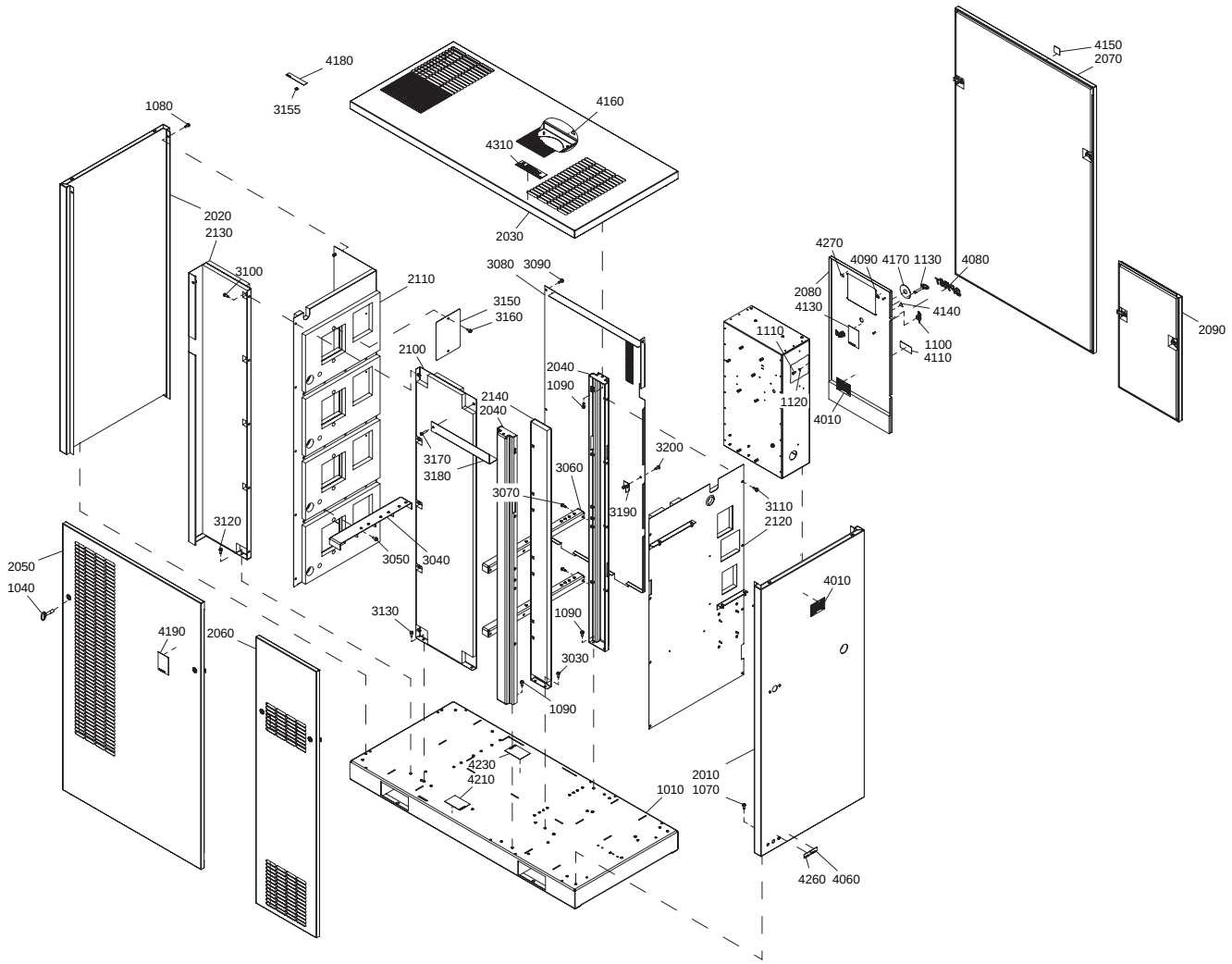

9828 5111 08-01ED00

Item No.	Qty.	Part Number	Description	Remarks
1010	1	2236 0940 00	FRAME	
1040	1	1089 9068 01	KEY	
1070	4	0147 1963 08	HEXAGON BOLT	
1080	4	0147 1963 08	HEXAGON BOLT	
1090	6	0147 1963 08	HEXAGON BOLT	
1100	2	1202 6400 00	HINGE	
1110	2	0147 1246 03	HEX.BOLT	
1120	2	0301 2321 00	WASHER	
1130	1	1089 9154 02	KEY	
2010	**1**	**2236 0941 82**	**PANEL**	3)
	2	1079 2903 05 •	PANEL PIN	
2020	**1**	**2236 0943 82**	**PANEL**	2)
	2	1079 2903 05 •	PANEL PIN	
2030	**1**	**2236 0945 82**	**ROOF**	4)
	4	1079 2903 03 •	PANEL PIN	
2040	2	2236 0947 82	BEAM	
2050	**1**	**2236 0948 82**	**DOOR**	3)
	2	2235 2592 00•	DOOR LOCK	
2060	**1**		**PANEL**	3)
		2236 2231 82	QOF 20	
		2236 0950 82	QOF 22	
		2236 0950 82	QOF 30	
	2	2235 2592 00 •	DOOR LOCK	
2070	**1**	**2236 0952 82**	**DOOR**	3)
	2	2235 2592 00 •	DOOR LOCK	
	1	1079 9927 53 •	LABEL	
	1	0690 1140 01 •	DECAL	
2080	**1**	**2236 0954 82**	**DOOR**	1)
	1	2236 0111 00 •	LOCK	
2090	**1**	**2236 0956 82**	**DOOR**	3)
	2	2235 2592 00 •	DOOR LOCK	
	1	2236 0903 00 •	DECAL	
2100	1	2236 0961 80	PANEL	2)
2110	1	2236 0964 80	BAFFLE	2)
2120	**1**	**2236 0968 80**	**BAFFLE**	2)
	1	1088 0801 53 •	GROMMET	
2130	1	2236 0971 80	BAFFLE	2)
2140	1	2236 2226 80	BAFFLE	3)
3030	2	0147 1963 08	HEXAGON BOLT	
3040	3	2236 0557 00	SUPPORT	
3050			HEXAGON BOLT	
	9	0147 1963 08	QOF 20	
	6	0147 1963 08	QOF 22	
	9	0147 1963 08	QOF 30	
3060			SUPPORT	
	3	2236 0352 00	QOF 20	
	2	2236 0352 00	QOF 22	
	3	2236 0352 00	QOF 30	
3070			HEXAGON BOLT	
	9	0147 1963 08	QOF 20	
	6	0147 1963 08	QOF 22	
	9	0147 1963 08	QOF 30	
3080	1	2236 0960 00	GUARD	
3090	5	0147 1963 08	HEXAGON BOLT	
3100	6	0147 1963 08	HEXAGON BOLT	

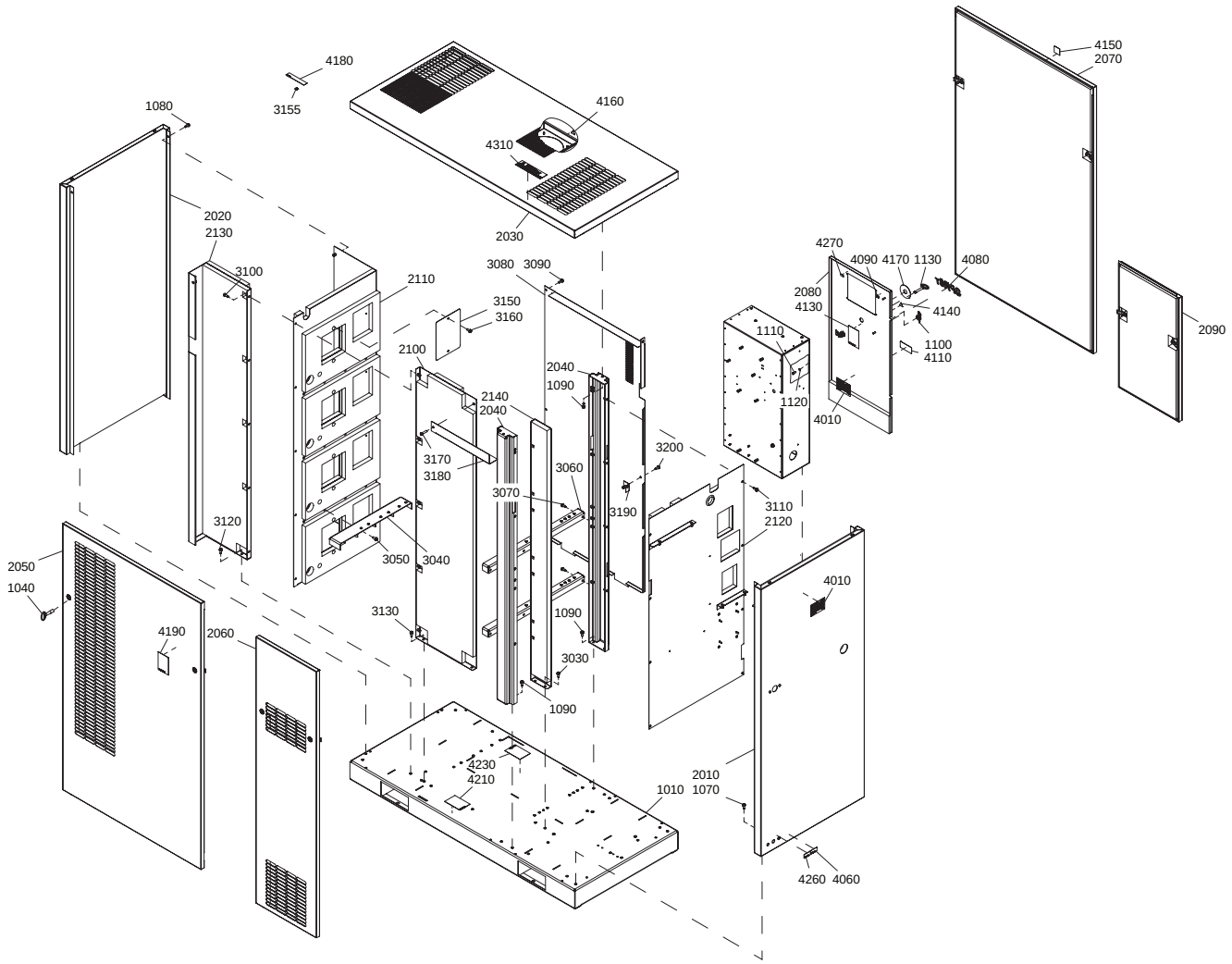

9828 5111 08-01ED00

Item No.	Qty.	Part Number	Description	Remarks
3110	8	0147 1963 08	HEXAGON BOLT	
3120	3	0147 1963 08	HEXAGON BOLT	
3130	4	0147 1963 08	HEXAGON BOLT	
3150	1		PLATE COVER	
		2236 0990 00	QOF 22	
3155	8	0333 3227 00	LOCK WASHER	
3160	2		HEXAGON BOLT	
		0147 1963 08	QOF 22	
3170	1	0147 1964 19	HEXAGON BOLT	
3180	1	2236 0934 00	PLATE	
3190	1	2236 0643 00	BRACKET	
3200	1	0147 1963 08	SCREW	
4010	2	1625 8499 15	DATA PLATE	
4060	1	1079 9915 98	LABEL	
4080	1		DECAL UNIT	
		2236 0840 07	QOF 20	
		2236 0840 09	QOF 22	
		2236 0840 11	QOF 30	
		2236 0840 08	QOF 20 W/DRYER	
		2236 0840 10	QOF 22 W/DRYER	
		2236 0840 12	QOF 30 W/DRYER	
4090	1	1079 9923 72	DECAL	
4110	1	1613 5330 10	LISTING MARK	
4130	1	1079 9903 48	WARNING LABEL	
4140	1	1088 1001 01	WARNING MARK	
4150	1	1079 9902 79	WARNING LABEL	
4160	1	1088 1001 01	WARNING MARK	
4170	1	1089 9125 05	ROUND DISK	
4190	1	1079 9903 48	WARNING LABEL	
4210	1	1079 9903 48	WARNING LABEL	
4230	1	1079 9903 48	WARNING LABEL	
4260	1	1079 9915 89	LABEL	
4270	1	1079 9932 15	DECAL	
4310	1	1079 9931 44	DECAL	

1-4) LINED WITH:
1) FOAM: 0395 6001 64 (AR) 20 X 2040 X 1650 (SELF-ADHESIVE)
2) FOAM: 0395 6001 66 (AR) 25 X 2040 X 1650 (SELF-ADHESIVE)
3) FOAM: 0395 6001 67 (AR) 30 X 2040 X 1650 (SELF-ADHESIVE)
4) FOAM: 0395 6006 69 (AR) 50 X 2040 X 1650 (SELF-ADHESIVE)

Notes

Quincy Compressor Products: 251.937.5900
E-mail: info@quincycompressor.com
Website: quincycompressor.com

© 2012 Quincy Compressor
All Rights Reserved. Litho in U.S.A.