Troubleshooting:

Problem	Possible Cause	Solution
Pump stops working or runs slow	Bad power source	Check all power connections, GFCI and circuit breakers. Test using a different power source.
	Internal Thermal Protector enabled	Unplug and allow Pump to cool 30 minutes. Check if Pump is clogged before restarting.
	Impeller is locked with debris	Disconnect power and use a pencil eraser to see if Impeller can be turned. If not, perform impeller maintenance.
	Too much debris, Intake clogged	Disconnect power and remove the obstruction.
		Use a Pondmaster Pump Bag to reduce future clogging.
	Air trapped in impeller chamber	Turn off Motor and restart after a few seconds. Repeat three times.
	Impeller worn out. Overtightened Motor Cover screws after maintenance	Replace with a new Impeller. Slightly loosen 4 screws that hold Motor to Motor Cover.
Pump leaks at fittings	O-rings not in place	Place O-rings over Inlet before securing connectors. Larger O-rings are for 2" connections.
Pump will not prime	Pump design is NOT self-priming	Position Pump below water level or fill hose with water and re-start.
Pump loses prime	Air leak	Check intake tubing and connections then repair air leak.
	Power interruption	Use a Check Valve to avoid losing prime when power is interrupted.

PARTS LIST for Pond & Waterfall Pumps

Model	1400	1900	2550	4850	5100	6100	6600	7600
Pondmaster #:	- -	20210	20215	20220	- -	20225	20230	20235
Supreme #:	40405	40415	40425	- -	40435	- -	40445	40450

NOTE:
Parts vary on different models. When referencing pump parts you must refer to the ITEM # of your pump from pump label. Please write your ITEM # here:

_____

#	Description
1	Intake Strainer
2	Motor Cover
3	Rubber Seal
4	Impeller
5	Impeller Plate
6	Rotor
7	Motor Support / Handle
8	Motor
9	Screws
10	1.5" Connector
11	2 Step 1.5" Barbed Connector*
12	2" Connector*
13	2 Step 2" Barbed Connector*
14	2" to 1.5" Reducer*
15	1.5" Directional Coupling
16	Motor Cover Screw
17	O-rings 1.5" and /or 2"*

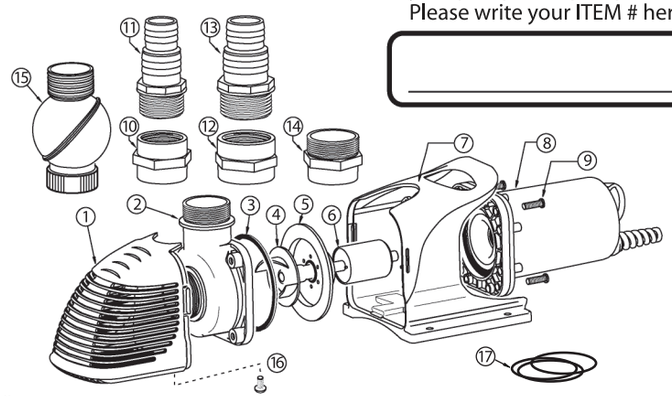

* 2" accessories not included in all models

LIMITED WARRANTY

Danner pumps are warranted against failure due to defects in materials and/or workmanship for 3 years from date of purchase. This warranty covers defects occurring under normal use. The warranty and remedies set forth herein are conditional upon proper installation, use, maintenance, storage, and conformance with the applicable use. It will be based upon Danner Mfg. discretion as to whether the defects are of manufacturing origin. For warranty repair, return only the part that is defective to our factory. Please include a dated proof of purchase and $10.00 for postage and handling. Any damages due to improper installation are not covered by this warranty. This warranty does not apply to appearance or accessory items. This warranty does not include damage due to handling, transportation, unpacking, setup, installation, repair or replacement of parts supplied by any other than Danner Mfg.; improper maintenance, modification or repairs by the purchaser; abuse, misuse, neglect, accident, fire, flood, or other acts of God. Any oral statements about this product made by the seller, the manufacturer, their representatives or any other parties do not constitute warranties and shall not be relied upon by the user and are not part of this contract. Neither the seller nor the manufacturer shall be liable for any injury, loss or damages, direct, incidental, or consequential, including but not limited to incidental or consequential damage for lost profits, lost sales, injury, and inability to use the product and the user agrees that no other remedy is available. Before using, the user shall determine the suitability of the product for their intended use and the user shall assume all risk liability whatsoever in connection therewith. To validate this warranty, keep your proof of purchase (copy of sales receipt). Warranty covers the repair or prorated replacement of the Danner Mfg. products. Danner Mfg. denies all liability for any other loss including but not limited to loss of equipment, income, livestock, vegetation or personal injury.
THE FOLLOWING VOIDS WARRANTY: LINE CORD OR PLUG IS ALTERED OR CUT, PRODUCT LABELS ARE DEFACED OR REMOVED. PRODUCT IS IMPROPERLY INSTALLED OR MAINTAINED BY USER OR THEIR AGENT. PRODUCT IS ABUSED, MISUSED, OR DAMAGED BY USER OR THEIR AGENT. PRODUCT IS NOT REMOVED FROM SERVICE AND DRIED DURING FREEZING CONDITIONS.

DANNER MFG. INC. • Islandia, New York 11749-1489 • Visit our web site at www.dannermfg.com

PONDMASTER®
Supreme - HYDROPONICS
By Danner Manufacturing, Inc.

SAVE THESE INSTRUCTIONS

Pond and Utility Pump with HY-Drive Technology

CARE AND OPERATING INSTRUCTIONS

MODELS	ITEM#	
	PONDMASTER	SUPREME HYDROPONICS
WFP1400	- -	40405
WFP1900	20210	40415
WFP2550	20215	40425
WFP4850	20220	- -
WFP5100	- -	40435
WFP6100	20225	- -
WFP6600	20230	40445
WFP7600	20235	40450

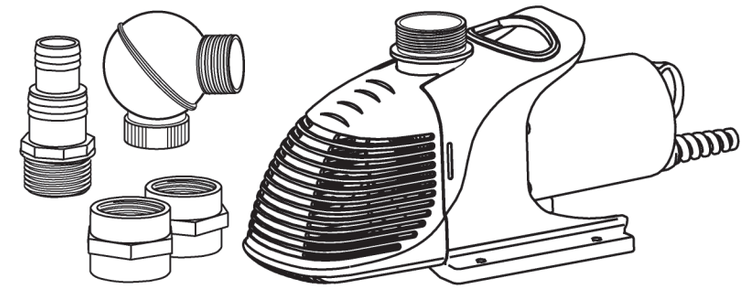

WARNING! PONDS ARE DANGEROUS TO SMALL CHILDREN!
NEVER LEAVE CHILDREN UNSUPERVISED NEAR A POND.

Thank you for purchasing this Pondmaster /Supreme Hydroponics product. This Continuous Duty Pump is designed to move large volumes of water silently and efficiently through filtration systems or to a waterfall, stream or fountain. It incorporates a single-phase capacitor asynchronous motor, a high efficiency vortex Impeller in conjunction with a ceramic impeller shaft and bearings to save energy while maintaining high output.
This Pump can be used immersed or inline. Note that when used inline it should be placed below the water level since it is not self-priming. Never run this Pump dry.

WARNING RISK OF ELECTRIC SHOCK

This pump is supplied with a grounding conductor and grounding type attachment plug. NEVER REMOVE GROUND PIN FROM PLUG. To reduce the risk of electric shock, be certain that it is connected only to properly grounded, grounding-type receptacle. The national Electric Code requires that a ground fault interrupter circuit (GFCI) be installed in every branch circuit supplying the fountain or pond equipment. Your dealer can supply GFCI units.
Do not immerse the plug in water. DO NOT REACH INTO THE WATER TO REMOVE THE PLUG. TURN OFF CIRCUIT FIRST. A "drip loop" in the cords should be used. A "drip loop" is a loop in the cord below the level of the receptacle or plug that prevents water from traveling along the cord.
WARNING: FOR YOUR PROTECTION, ALWAYS UNPLUG THE UNIT FROM ITS POWER SOURCE BEFORE INSTALLING OR SERVICING. DO NOT REACH, REMOVE OR DISASSEMBLE BEFORE YOU DISCONNECT POWER.

ZG282 revC 7/12

OPERATION PRECAUTIONS

- **Never run Pump dry.**
- Only use this Pump with clean water. It is not intended to move water containing large non-dissolved solids. Never use Pump for liquids other than water.
- Do not place directly into silt or sand. Seat on a flat solid surface or mount using mounting holes on Motor Support / Handle.
- Do not use in hot water over 40° C (104° F).
- Do not touch Impeller if Pump is plugged in. Thermal Protector may have temporarily turned off Motor, which will turn back on after cooling.
- Never use Pump if power cord is cut or damaged in any way. Cord can not be changed. If damaged, Pump must be discarded.
- If motor is clogged, disconnect power before servicing since thermal protector may have temporarily turned off motor and it may restart without warning once cool.
- The pump is not suitable for use in swimming pools, swimming ponds and other situations where persons could make bodily contact with the water.
- **NEVER ALLOW STANDING WATER TO FREEZE IN PUMP OR CONNECTIONS.**

OPERATING INSTRUCTIONS

Pump can be used either IMMERSED or IN-LINE

For all installations: Make certain that all electrical connections have a GFCI installed. Always use Teflon tape on hose fittings. This will aid in future disassembly. Place O-Rings over male threads on fittings.

Immersed Application:
Protect the intake from leaves and other debris getting drawn into the Impeller by using a separate Pump Bag or by placing Pump into a Skimmer or Pump Vault. Minimum depth from top is 6" (15 cm) to prevent air from getting drawn in.

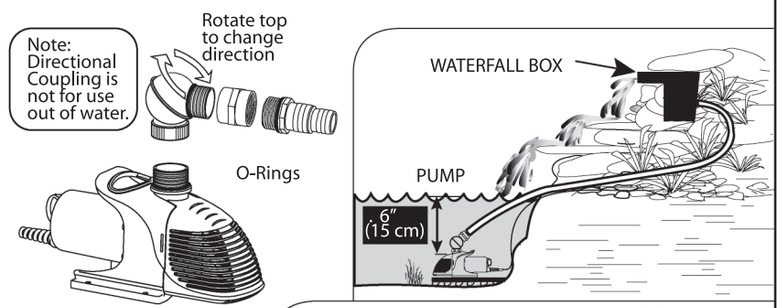

In-line Application:
Remove Intake Strainer to connect to Pump inlet. Place Pump below water level, otherwise it will be necessary to prime it. To prime Pump, hoses must be filled with water before activating Pump.

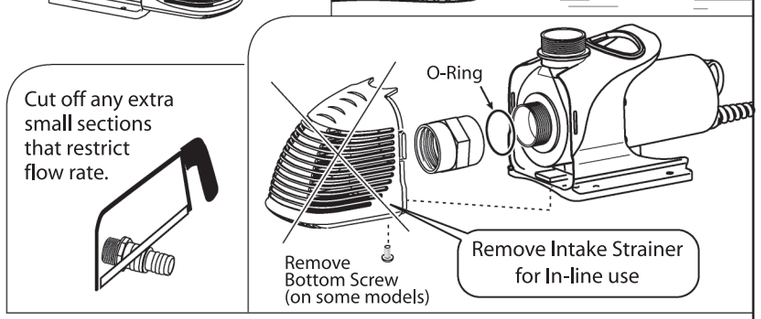

A separate in-line check valve or foot valve is strongly recommended to prevent loss of prime if power is interrupted.

MAINTENANCE: KEEP IMPELLER CLEAN

This Pump does not require any lubrication or special maintenance. Periodically cleaning the impeller will maintain Pump performance and extend Pump life.

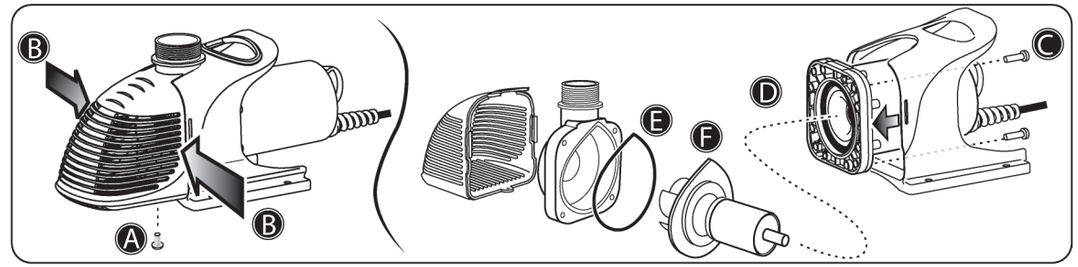

1) Completely disconnect Pump from power supply.
2) Remove hoses and bring Pump to clear work area.
3) To remove Intake Strainer, unscrew bottom screw (if included with your Pump model) Ⓐ. Press sides in to release side hooks and slide off Intake Strainer Ⓑ.
4) Remove 4 screws Ⓒ to detach Motor from Motor Support /Handle and Motor Cover.
5) Pull the Impeller out from the chamber Ⓓ. If impeller is difficult to remove, calcium or scale deposits may have seized parts together. Place unit in a bucket with a solution of 1 part white vinegar to 9 parts water and allow to soak overnight. This should loosen scale for disassembly.
6) Clean impeller, impeller chamber and Intake Strainer with fresh water or vinegar solution only, never any solvents. Rinse clean completely with clean water.
7) Reverse steps to reassemble. If rubber seal Ⓔ becomes dislodged, make certain it is clean and place it back into the recess on the Motor Cover.
8) Align the Impeller plate Ⓕ with the recess in the Motor Cover before inserting Impeller back into Motor.

WINTERIZATION and STORAGE

If Pump is used outdoors in areas with harsh winters the Pump should be removed from shallow water that may freeze. Either place Pump into deep water or if Pump is removed, it must be cleaned with plain water and dried before being put into storage.

If Pump will be turned off for long periods of time and left under the water in non-freezing areas, debris may accumulate inside the pump. Before reinstallation Pump should be flushed with clean water. It is strongly recommended to perform Impeller maintenance to thoroughly clean Impeller and chamber before storing.

PUMP OUTPUTS

GALLONS PER HOUR

HY-DRIVE MODEL	Pondmaster ITEM #	Supreme Hydroponics ITEM #	WATTS @ 1'	AMPS	AT 0'	AT 1'	AT 3'	AT 5'	AT 7'	AT 10'	AT 15'	AT 20'	AT 25'	AT 30'	SHUTOFF
WFP 1400	--	40405	150	1.3	1400	1275	1250	1150	1100	950	675	350			20'
WFP 1900	20210	40415	93	.78	1910	1710	1325	870	555						10'
WFP 2550	20215	40425	147	1.25	2505	2380	2010	1490	1045	455					11.5'
WFP 4850	20220	--	328	2.76	4850	4725	4300	3700	3050	2225	1550	300			22.5'
WFP 5100	--	40435	439	3.6	5100	5100	5050	4650	4375	3900	3050	2425	1675		30'
WFP 6100	20225	--	520	4.39	6100	5750	4725	4175	3450	2400	1625	850	250		28'
WFP 6600	20230	40445	593	4.94	6625	6600	6275	5500	4925	4325	3325	2425	1850	550	30.5'