PARTS BREAKDOWN

XUX02SMX2

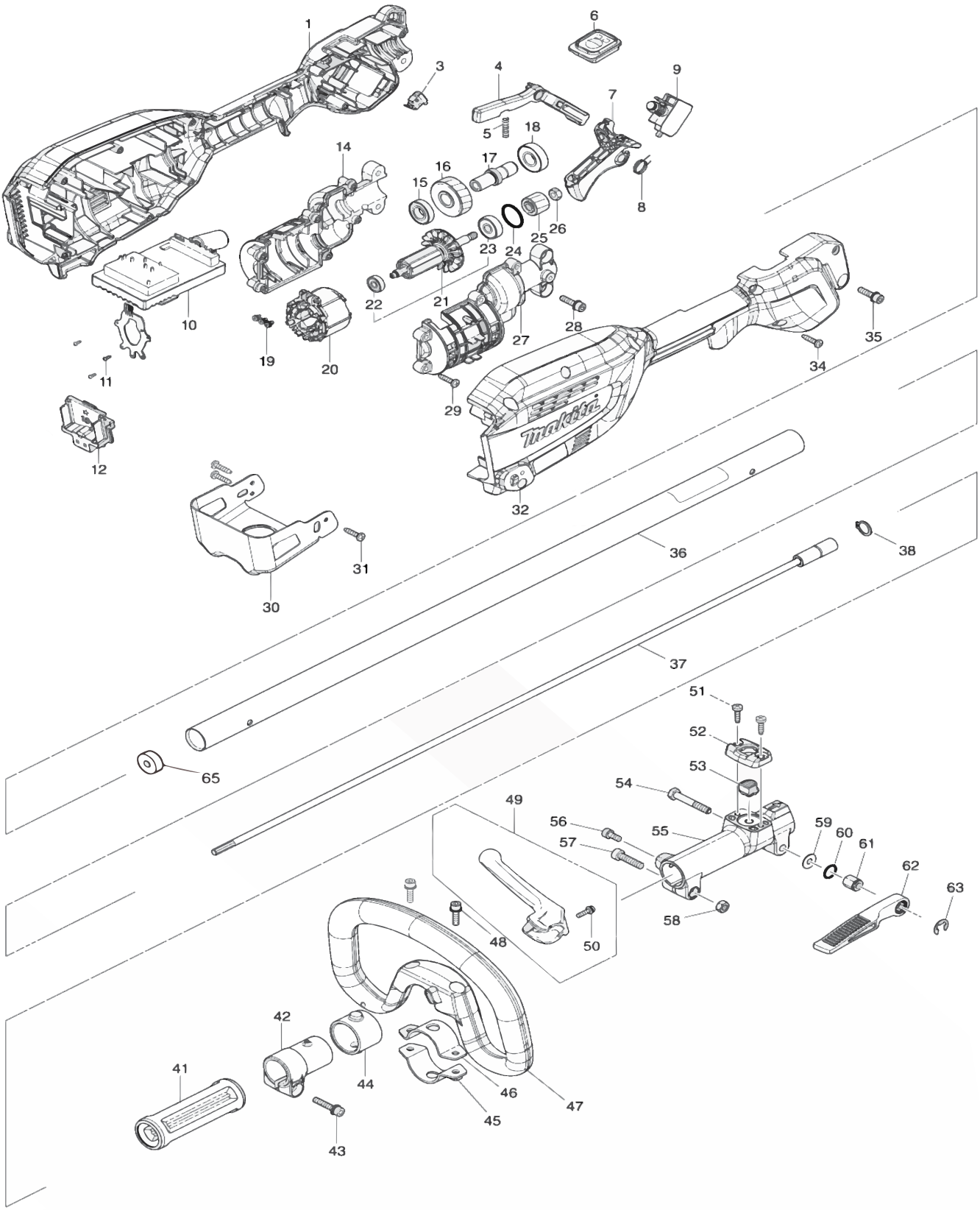
1
2
3
4
5
6
7
8
9
10
11
12
14
15
16
17
18
19
20
21
22
23
24
25
26
27
28
29
30
31
32
34
35
36
37
38
41
42
43
44
45
46
47
48
49
50
51
52
53
54
55
56
57
58
59
60
61
62
63
65
Makita

XUX02SMX2 — 1 Unit Complete

Products with multiple versions are listed in subsiding order with the newest version on top not indented.

Section	Fig. No.	Part No.	Description	XUX02SM1X2	Tech Bulletin	Notes
1	1	183S11-5	GRIP HOUSING SET	1		INC. 32
1	3	632G61-0	SWITCH UNIT	1		
1	4	412863-6	LOCK OFF LEVER	1		
1	5	233101-1	COMPRESSION SPRING 4	1		
1	6	140W41-3	SWITCH CIRCUIT COMPLETE	1		
1	7	459758-2	SWITCH LEVER	1		
1	8	233622-3	TORSION SPRING 12	1		
1	9	651494-8	SWITCH C3JW-1A-PA-2	1		
1	10	620D91-5	CONTROLLER	1		
1	11	266490-9	TAPPING SCREW PT 2X6	3		
1	12	644809-6	TERMINAL	1		
1	14	183R80-0	MOTOR HOUSING SET	1		INC. 27
1	15	210243-8	BALL BEARING 6901ZZ	1		
1	16	227848-7	HELICAL GEAR 33	1		
1	17	327719-9	SPINDLE HUB	1		
1	18	210244-6	BALL BEARING 6001ZZ	1		
1	19	652069-6	FLAT HEAD SCREW M3X6	3		
1	20	629A28-1	STATOR	1		
1	21	519654-7	ROTOR ASS'Y	1		INC. 22,23
1	22	210235-7	BALL BEARING 625ZZ	1		
1	23	210236-5	BALL BEARING 627ZZ	1		
1	24	213843-3	O-RING 21	1		
1	25	227849-5	HELICAL GEAR 16	1		
1	26	252153-3	HEX. NUT M6-10	1		
1	27	183R80-0	MOTOR HOUSING SET	1		INC. 14
1	28	922234-4	H.S.H.BOLT M5X20 WITH WG	2		
1	29	266326-2	TAPPING SCREW 4X18	6		
1	30	347765-6	BATTERY GUARD	1		
1	31	266326-2	TAPPING SCREW 4X18	3		
1	32	183S11-5	GRIP HOUSING SET	1		INC. 1
1	34	266326-2	TAPPING SCREW 4X18	10		
1	35	922234-4	H.S.H.BOLT M5X20 WITH WG	1		
1	36	141B21-6	SHAFT PIPE B COMPLETE	1		
1	37	141238-9	SHAFT B COMPLETE	1		

XUX02SMX2 — 1 Unit Complete

Products with multiple versions are listed in subsiding order with the newest version on top not indented.

Section	Fig. No.	Part No.	Description	XUX02SM1X2	Tech Bulletin	Notes
1	38	961052-5	RETAINING RING S-12	1		
1	41	451601-1	SPACER 24	1		
1	42	457269-1	PIPE HOLDER 24	1		
1	43	922244-1	H.S.H.BOLT M5X25 WITH WG	1		
1	44	424942-8	DAMPER	1		
1	45	347114-7	LOWER CLAMP 35	1		
1	46	347113-9	UPPER CLAMP 35	1		
1	47	457772-2	LOOP HANDLE	1		
1	48	922234-4	H.S.H.BOLT M5X20 WITH WG	2		
1	49	144315-6	BARRIER COMPLETE	1		INC. 50
1	50	911128-8	P.H.SCREW M4X16 WITH WR	1		
1	51	266034-5	TAPPING SCREW CT 4X16	2		
1	52	452840-6	RELEASE BUTTON COVER	1		
1	53	452839-1	RELEASE BUTTON	1		
1	54	265596-0	HEX.BOLT M6X40	1		
1	55	318750-6	JOINT 24	1		
1	56	922211-6	H.S.H.BOLT M5X12 WITH W	1		
1	57	922342-1	HEX. SOCKET HEAD BOLT M6X25	1		
1	58	931302-2	HEX. NUT M6	1		
1	59	253332-6	THIN WASHER 6	1		
1	60	213105-9	O RING 11	1		
1	61	252159-1	HEX. NUT M6	1		
1	62	272268-0	LEVER 94	1		
1	63	961014-3	STOP RING E-8	1		
1	65	443170-6	FELT	1	D7494	

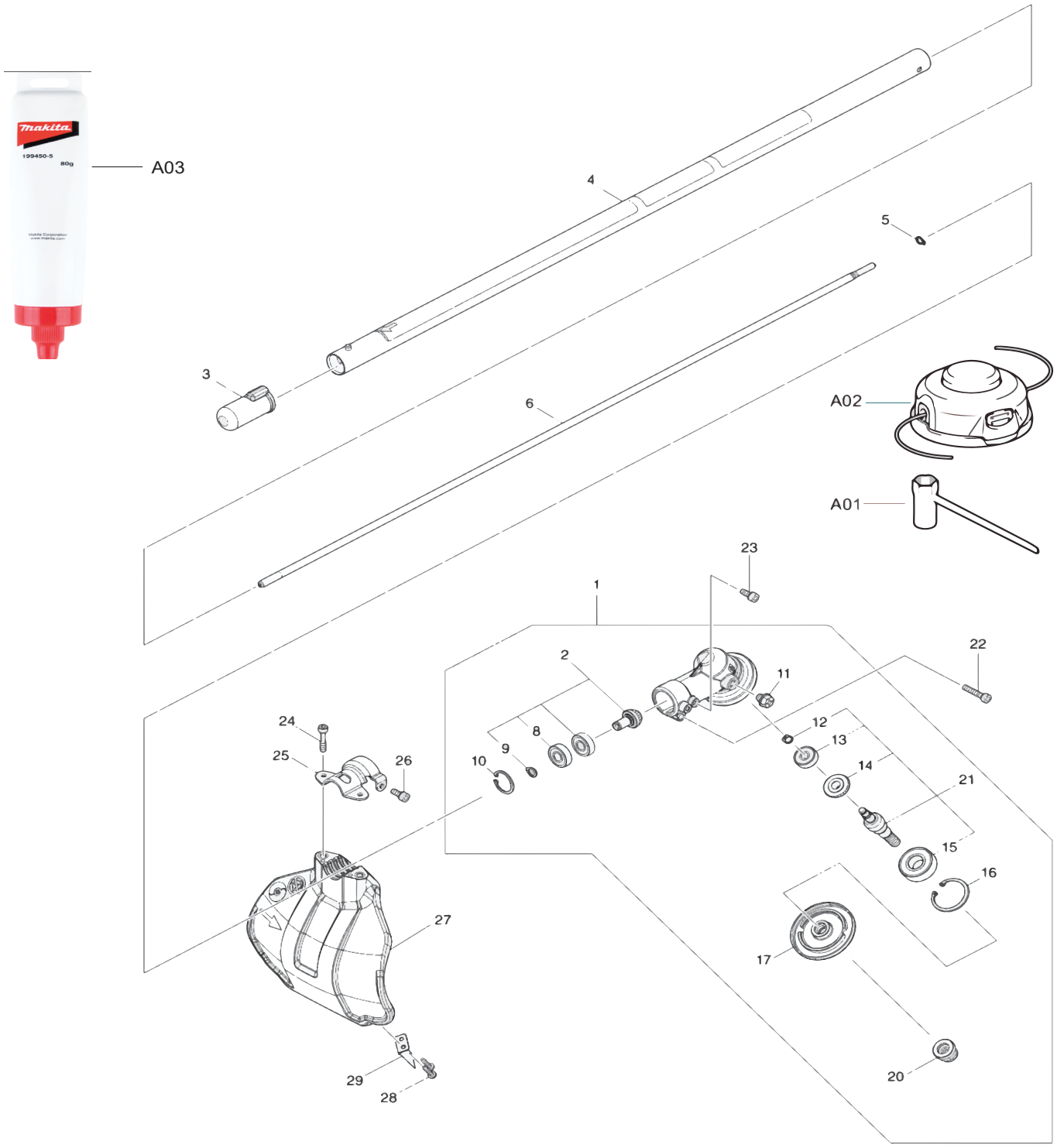
A03
4
5
3
6
A02
A01
23
1
22
2
11
24
8
12
25
26
9
13
10
14
21
15
16
27
17
20
29
28

Products with multiple versions are listed in subsiding order with the newest version on top not indented.

Section	Fig. No.	Part No.	Description	XUX02SM1X2	Tech Bulletin	Notes
2	1	127710-5	GEAR CASE ASSEMBLY US	1		INC. 2,10,11,16,17,20,21
2	2	136374-4	SPIRAL BEVEL GEAR ASS'Y	1		INC. 8,9
2	3	424434-7	CAP 24	1		
2	4	140Y53-8	SHAFT PIPE A COMPLETE A	1		
2	5	961003-8	RETAINING RING S-7	1		
2	6	327723-8	SHAFT A	1		
2	8	210157-1	BALL BEARING 609ZZ	2		
2	9	259071-6	RETAINING RING (EXT) S-9	1		
2	10	259072-4	RETAINING RING (INT)R-24	1		
2	11	265590-2	+HEX.BOLT M8X10 WITH R	1		
2	12	259070-8	RETAINING RING (EXT) S-7	1		
2	13	210030-5	BALL BEARING 627ZZ	1		
2	14	226988-8	SPIRAL BEVEL GEAR 19	1		
2	15	211228-7	BALL BEARING 6202DDW	1		
2	16	259069-3	RETAINING RING (INT) R-35	1		
2	17	140N88-3	RECEIVE WASHER COMPLETE	1		
2	20	252236-9	HEX. LOCK NUT M10-17	1		
2	21	136375-2	CUTTER SHAFT ASS'Y	1		INC. 12-15
2	22	922242-5	HEX. SOCKET HEAD BOLT M5X25	1		
2	23	922216-6	HEX. SOCKET HEAD BOLT M5X14	1		
2	24	251513-6	H.S.H.BOLT M5X25	2		
2	25	347107-4	PROTECTOR CLAMP 24	1		
2	26	922216-6	HEX. SOCKET HEAD BOLT M5X14	1		
2	27	412968-2	PROTECTOR N 330	1		
2	28	266326-2	TAPPING SCREW 4X18	2		
2	29	346855-2	CUTTER	1		
2	A01	782238-6	BOX WRENCH 17	1		
2	A02	191R00-0	RAPID LOAD TRIMMER HEAD	1		
2	A03	199450-5	GEAR CASE GREASE	1		

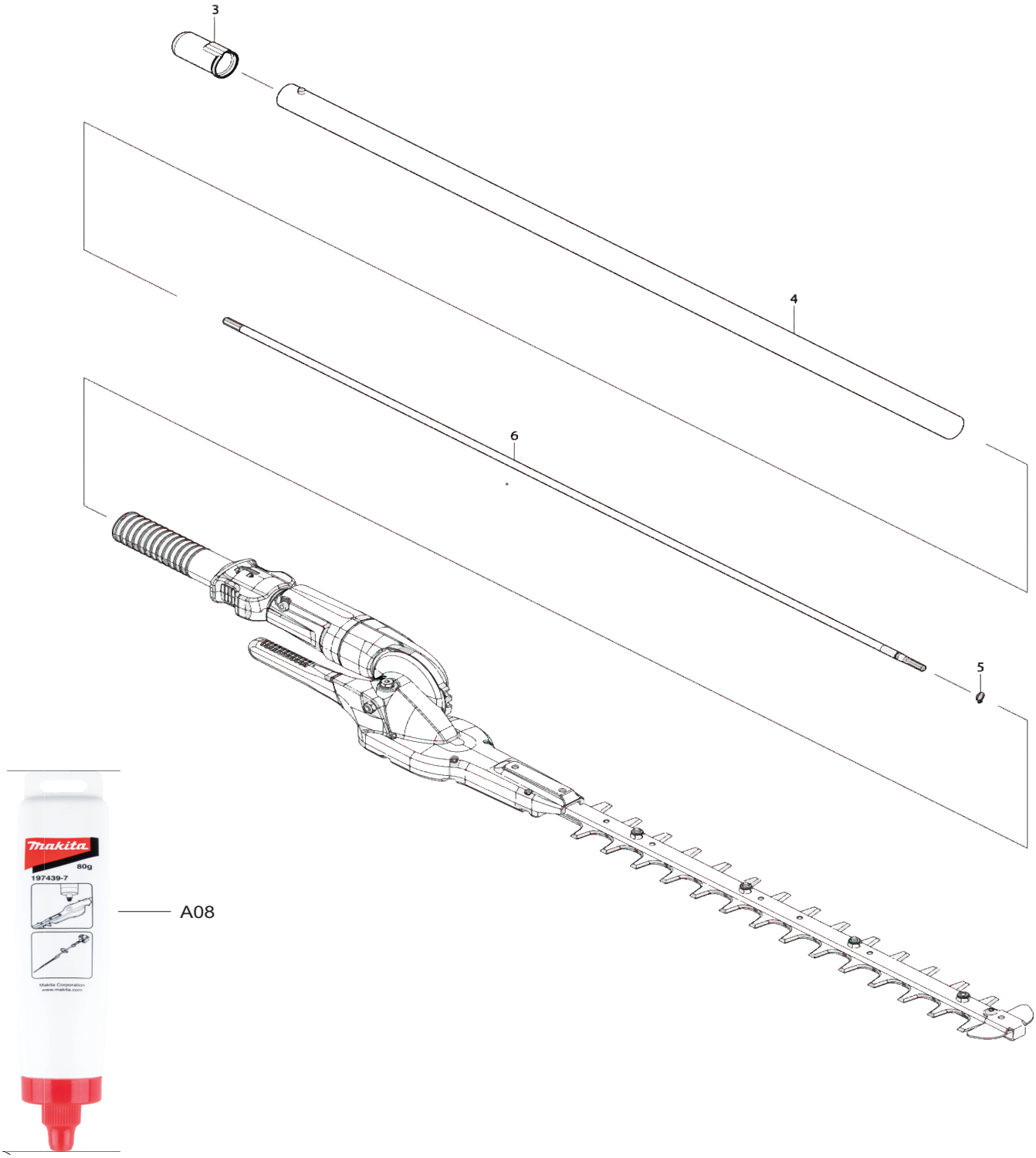
3
4
6
5
A08
makita
80g
197439-7

Products with multiple versions are listed in subsiding order with the newest version on top not indented.

Section	Fig. No.	Part No.	Description	XUX02SM1X2	Tech Bulletin	Notes
3	3	424434-7	CAP 24	1		
3	4	142033-0	PIPE COMPLETE (INC. 2)	1		
3	5	961003-8	RETAINING RING S-7	1		
3	6	326088-5	SHAFT A	1		
3	A08	199450-5	GEAR CASE GREASE	1		

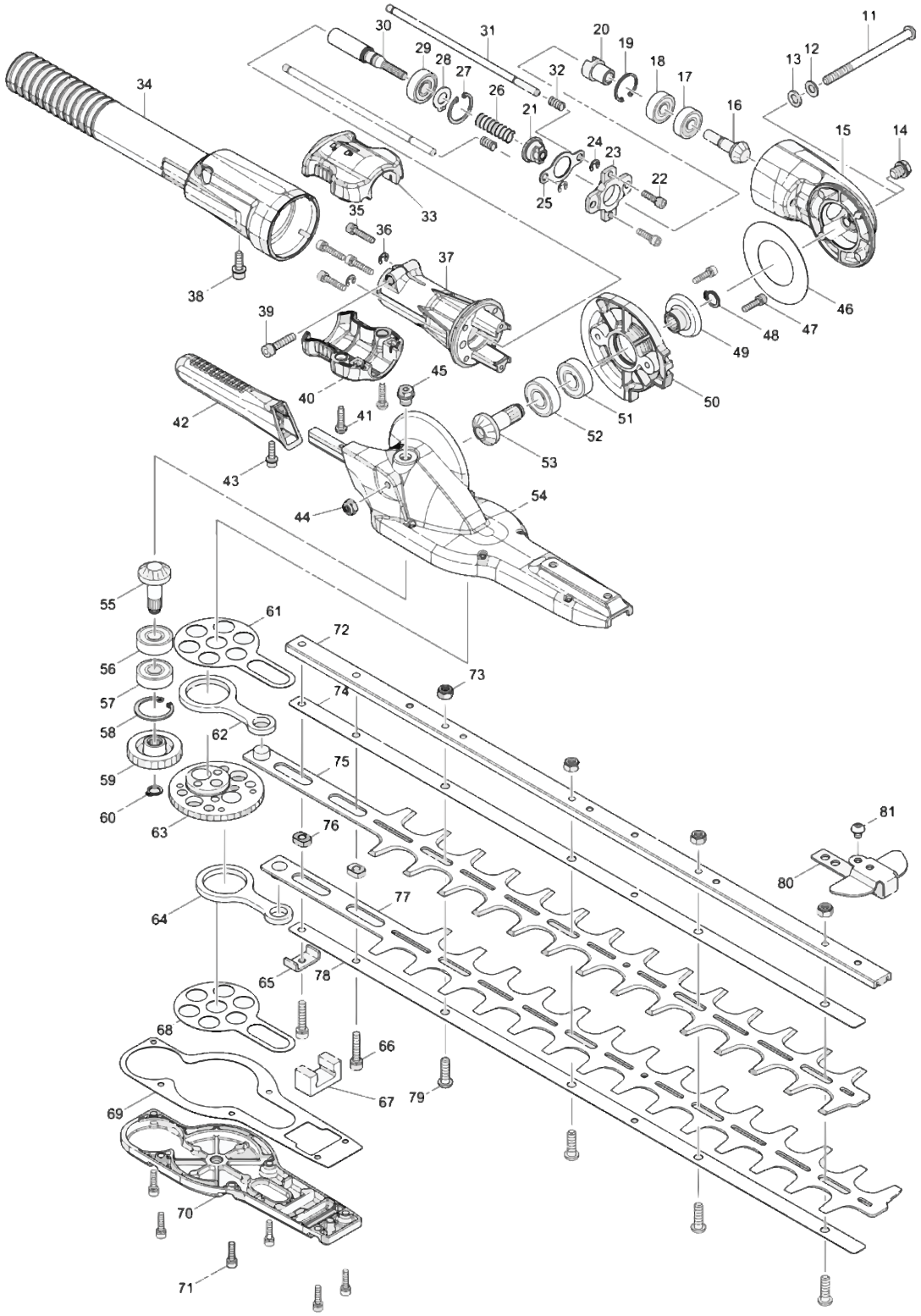
11
12
13
14
15
16
17
18
19
20
21
22
23
24
25
26
27
28
29
30
31
32
33
34
35
36
37
38
39
40
41
42
43
44
45
46
47
48
49
50
51
52
53
54
55
56
57
58
59
60
61
62
63
64
65
66
67
68
69
70
71
72
73
74
75
76
77
78
79
80
81

Products with multiple versions are listed in subsiding order with the newest version on top not indented.

Section	Fig. No.	Part No.	Description	XUX02SM1X2	Tech Bulletin	Notes
4	11	266817-3	H.S. BUTTON HEAD BOLT M6X85	1		
4	12	232279-7	CONED DISC SPRING 6	1		
4	13	941151-9	FLAT WASHER 6	1		
4	14	266818-1	HEX SOCKET HEX BOLT M8X8	1		
4	15	318969-7	JOINT	1		
4	16	227604-5	SPIRAL BEVEL GEAR 9	1		
4	17	211032-4	BALL BEARING 608ZZ	1		
4	18	211032-4	BALL BEARING 608ZZ	1		
4	19	962102-9	RETAINING RING R-22	1		
4	20	310534-8	CAM A	1		
4	21	310535-6	CAM B	1		
4	22	922126-7	HEX SOCKET HEAD BOLT M4X16	2		
4	23	313254-3	HOLDER PLATE	1		
4	24	961011-9	STOP RING E-4	2		
4	25	346657-6	SLIDE PLATE	1		
4	26	231297-2	COMPRESSION SPRING 9	1		
4	27	962103-7	RETAINING RING R-24	1		
4	28	961005-4	RETAINING RING S-9	1		
2	29	210051-7	BALL BEARING 609ZZ	1		
4	29	210049-4	BALL BEARING 609ZZ	1		
4	30	142000-5	SPINGLE COMPLETE	1		
4	31	326812-6	ROD 5	2		
4	31	326256-0	ROD 5	2		
4	32	233117-6	COMPRESSION SPRING 6	2		
4	33	187575-7	SLIDE LEVER SET (INC. 40)	1		
4	34	454249-8	COVER	1		
4	35	265493-0	HEX SOCKET HEAD BOLT M4X20	4		
4	36	961011-9	STOP RING E-4	2		
4	37	318970-2	PIPE HOLDER	1		
4	38	922223-9	H.S.H. BOLT M5X16 WITH WR	1		
4	39	922241-7	HEX SOCKET HEAD BOLT M5X25	1		
4	40	187575-7	SLIDE LEVER SET (INC 33)	1		
4	41	265995-6	TAPPING SCREW 4X18	2		

Products with multiple versions are listed in subsiding order with the newest version on top not indented.

Section	Fig. No.	Part No.	Description	XUX02SM1X2	Tech Bulletin	Notes
4	42	454248-0	GRIP	1		>JUNE 2015
4	42	456369-4	GRIP	1	A9070	JULY 2015>
4	43	922128-3	HEX SOCKET HEAD BOLT M4X16	1		>JUNE 2015
4	43	911516-9	PAN HEAD SCREW M4X12	2	A9070	JULY 2015>
4	44	252190-7	HEX LOCK NUT M6-10	1		
4	45	266818-1	HEX SOCKET HEX BOLT M8X8	1		
4	46	267467-7	FLAT WASHER 36	1		
4	47	922126-7	HEX SOCKET HEAD BOLT M4X16	2		
4	48	961006-2	RETAINING RING S-10	1		
4	49	227605-3	SPIRAL BEVEL GEAR 22	1		
4	50	310533-0	ANGULAR PLATE	1		
4	51	211101-1	BALL BEARING 6001ZZ	1		
4	51	211148-5	BALL BEARING 6001ZZ	1		
4	52	211101-1	BALL BEARING 6001ZZ	1		
4	52	211148-5	BALL BEARING 6001ZZ	1		
4	53	227606-1	SPIRAL BEVEL GEAR 12	1		
4	54	142018-6	GEAR HOUSING COMPLETE	1		
4	54	143500-8	GEAR HOUSING COMPLETE	1		
4	55	227607-9	SPIRAL BEVEL GEAR 12	1		
4	56	211097-6	BALL BEARING 600ZZ	1		
4	56	211062-5	BALL BEARING 600ZZ	1		
4	57	211097-6	BALL BEARING 600ZZ	1		
4	57	211062-5	BALL BEARING 600ZZ	1		
4	58	962105-3	RETAINING RING R-26	1		
4	59	227317-8	SPUR GEAR 24	1		
4	60	961004-6	RETAINING RING S-8	1		
4	61	346658-4	PLATE	1		
4	62	346251-4	CONNECTING ROD	1		
4	63	227248-1	SPUR GEAR 43	1		
4	64	346251-4	CONNECTING ROD	1		
4	65	346256-4	HOLDER	1		
4	66	922241-7	HEX SOCKET HEAD BOLT M5X25	2		
4	67	443159-4	SEAL	1		
4	68	346658-4	PLATE	1		
4	69	423458-0	GASKET	1		

Products with multiple versions are listed in subsiding order with the newest version on top not indented.

Section	Fig. No.	Part No.	Description	XUX02SM1X2	Tech Bulletin	Notes
4	70	318968-9	UNDER COVER	1		
4	71	922126-7	HEX SOCKET HEAD BOLT M4X16	6		
4	72	332058-4	GUIDE BAR	1		
4	73	264089-4	HEX LOCK NUT M6-10	4		
4	74	346665-7	PLATE	1		
4	75	725187-4	SHEAR BLADE	1		
4	76	313211-1	SLEEVE 5	2		
4	77	725187-4	SHEAR BLADE	1		
4	78	346665-7	PLATE	1		
4	79	266824-6	H.S. BUTTON HEAD BOLT M6X20	4		
4	80	346629-1	END COVER, EN5950SH	1		
4	81	266075-1	H.S.H.BOLT M5X6, EN5950SH	1		