KOHLER Courage® XT

XT-6, XTR-6, XT-7, XTR-7

Service Manual

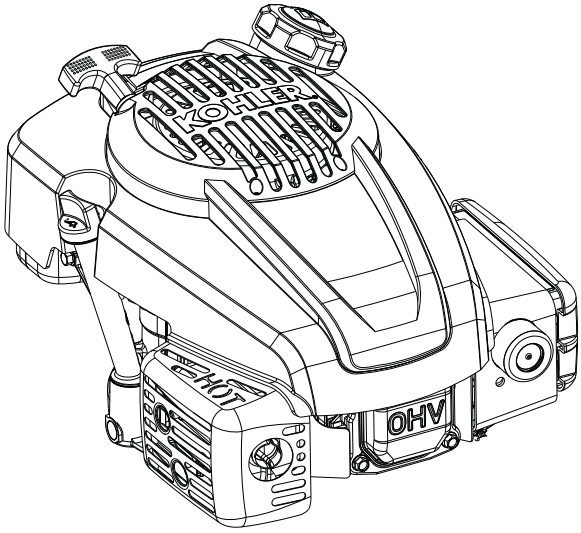

IMPORTANT: Read all safety precautions and instructions carefully before operating equipment. Refer to operating instruction of equipment that this engine powers.

Ensure engine is stopped and level before performing any maintenance or service.

2 Safety
3 Maintenance
5 Specifications
10 Tools and Aids
13 Troubleshooting
17 Air Cleaner/Intake
18 Fuel System
23 Governor System
25 Lubrication System
26 Electrical System
30 Starter System
32 Disassembly/Inspection and Service
43 Reassembly

SAFETY PRECAUTIONS

WARNING: A hazard that could result in death, serious injury, or substantial property damage.

CAUTION: A hazard that could result in minor personal injury or property damage.

NOTE: is used to notify people of important installation, operation, or maintenance information.

WARNING

Explosive Fuel can cause fires and severe burns.

Do not fill fuel tank while engine is hot or running.

Gasoline is extremely flammable and its vapors can explode if ignited. Store gasoline only in approved containers, in well ventilated, unoccupied buildings, away from sparks or flames. Spilled fuel could ignite if it comes in contact with hot parts or sparks from ignition. Never use gasoline as a cleaning agent.

WARNING

Rotating Parts can cause severe injury.

Stay away while engine is in operation.

Keep hands, feet, hair, and clothing away from all moving parts to prevent injury. Never operate engine with covers, shrouds, or guards removed.

WARNING

Carbon Monoxide can cause severe nausea, fainting or death.

Avoid inhaling exhaust fumes.

Engine exhaust gases contain poisonous carbon monoxide. Carbon monoxide is odorless, colorless, and can cause death if inhaled.

WARNING

Accidental Starts can cause severe injury or death.

Disconnect and ground spark plug lead(s) before servicing.

Before working on engine or equipment, disable engine as follows: 1) Disconnect spark plug lead(s). 2) Disconnect negative (–) battery cable from battery.

WARNING

Hot Parts can cause severe burns.

Do not touch engine while operating or just after stopping.

Never operate engine with heat shields or guards removed.

WARNING

Cleaning Solvents can cause severe injury or death.

Use only in well ventilated areas away from ignition sources.

Carburetor cleaners and solvents are extremely flammable. Follow cleaner manufacturer's warnings and instructions on its proper and safe use. Never use gasoline as a cleaning agent.

CAUTION

Electrical Shock can cause injury.

Do not touch wires while engine is running.

CAUTION

Damaging Crankshaft and Flywheel can cause personal injury.

Using improper procedures can lead to broken fragments. Broken fragments could be thrown from engine. Always observe and use precautions and procedures when installing flywheel.

WARNING

Uncoiling Spring can cause severe injury.

Wear safety goggles or face protection when servicing retractable starter.

Retractable starters contain a powerful, recoil spring that is under tension. Always wear safety goggles when servicing retractable starters and carefully follow instructions in Retractable Starter for relieving spring tension.

MAINTENANCE INSTRUCTIONS

	WARNING	Before working on engine or equipment, disable engine as follows: 1) Disconnect spark plug lead(s). 2) Disconnect negative (–) battery cable from battery.
	Accidental Starts can cause severe injury or death. Disconnect and ground spark plug lead(s) before servicing.	

Normal maintenance, replacement or repair of emission control devices and systems may be performed by any repair establishment or individual; however, warranty repairs must be performed by a Kohler authorized dealer.

MAINTENANCE SCHEDULE

After first 3-5 Hours

● Change oil.	Lubrication System

Every 25 Hours or Annually[1]

● Service/replace precleaner.	Air Cleaner/Intake
● Check air cleaner for dirty, loose or damaged parts.	Air Cleaner/Intake

Every 50 Hours or Annually

● Change oil.	Lubrication System
● Replace fuel filter (if equipped).	

Every 50 Hours or Annually[1]

● Replace air cleaner element.	Air Cleaner/Intake

Every 100 Hours or Annually[1]

● Replace spark plug and set gap.	Electrical System
● Clean spark arrestor (if equipped).	

Every 100 Hours or Annually[2]

● Check and adjust valve clearance when engine is cold.	Reassembly
● Have combustion chamber decarbonized.	

[1] Perform these procedures more frequently under severe, dusty, dirty conditions.
[2] Have a Kohler authorized dealer perform this service.

REPAIRS/SERVICE PARTS

Kohler genuine service parts can be purchased from Kohler authorized dealers. To find a local Kohler authorized dealer visit KohlerEngines.com or call 1-800-544-2444 (U.S. and Canada).

OIL RECOMMENDATIONS

We recommend use of Kohler oils for best performance. Other high-quality detergent oils (including synthetic) of API (American Petroleum Institute) service class SJ or higher are acceptable. Select viscosity based on air temperature at time of operation as shown in table below.

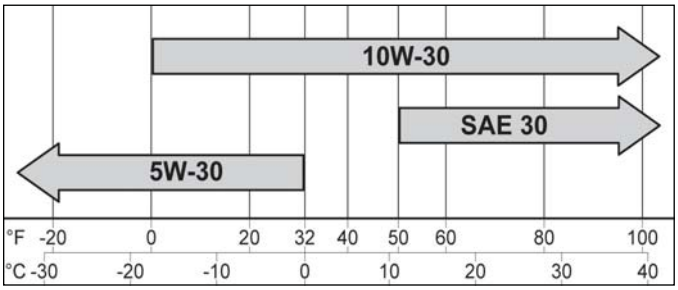

FUEL RECOMMENDATIONS

⚠ WARNING

Explosive Fuel can cause fires and severe burns.

Do not fill fuel tank while engine is hot or running.

Gasoline is extremely flammable and its vapors can explode if ignited. Store gasoline only in approved containers, in well ventilated, unoccupied buildings, away from sparks or flames. Spilled fuel could ignite if it comes in contact with hot parts or sparks from ignition. Never use gasoline as a cleaning agent.

NOTE: E15, E20 and E85 are NOT approved and should NOT be used; effects of old, stale or contaminated fuel are not warrantable.

Fuel must meet these requirements:

- Clean, fresh, unleaded gasoline.
- Octane rating of 87 (R+M)/2 or higher.
- Research Octane Number (RON) 90 octane minimum.
- Gasoline up to 10% ethyl alcohol, 90% unleaded is acceptable.
- Methyl Tertiary Butyl Ether (MTBE) and unleaded gasoline blend (max 15% MTBE by volume) are approved.
- Do not add oil to gasoline.
- Do not overfill fuel tank.
- Do not use gasoline older than 30 days.

STORAGE

If engine will be out of service for 2 months or more follow procedure below.

1. Add Kohler PRO Series fuel treatment or equivalent to fuel tank. Run engine 2-3 minutes to get stabilized fuel into fuel system (failures due to untreated fuel are not warrantable).
2. Change oil while engine is still warm from operation. Remove spark plug(s) and pour about 1 oz. of engine oil into cylinder(s). Replace spark plug(s) and crank engine slowly to distribute oil.
3. Disconnect negative (-) battery cable.
4. Store engine in a clean, dry place.

ENGINE IDENTIFICATION NUMBERS

Kohler engine identification numbers (model, specification and serial) should be referenced for efficient repair, ordering correct parts, and engine replacement.

Model. XT-6
- Courage Engine
- Vertical Shaft
- Numerical Designation

Specification XT149-0001

Serial 3923500328
- Year Manufactured Code
- Factory Code

Code	Year
39	2009
40	2010
41	2011

GENERAL SPECIFICATIONS[3,6]	XT-6	XTR-6	XT-7	XTR-7
Bore	65 mm (2.6 in.)		70 mm (2.8 in.)	
Stroke	45 mm (1.8 in.)			
Displacement	149 cc (9.1 cu. in.)		173 cc (10.6 cu. in.)	
Oil Capacity (refill)	0.6 L (20 oz.)			
Maximum Angle of Operation (@ full oil level)[4]	20°			

TORQUE SPECIFICATIONS[3,5]	XT-6	XTR-6	XT-7	XTR-7
Air Cleaner Base				
Stud Fastener	8 N·m (71 in. lb.)			
Crankcase Fastener	8 N·m (71 in. lb.)			
Blower Housing				
Stud	10 N·m (88 in. lb.)			
Nut	8 N·m (70 in. lb.)			
Brake				
Mounting Fastener	9.5 N·m (84 in. lb.)			
Breather Cover				
Fastener	10 N·m (88 in. lb.)			
Carburetor				
Stud Fastener	8 N·m (71 in. lb.)			
Connecting Rod				
Cap Fastener (torque in increments)	12.5 N·m (110 in. lb.)			

[3] Values are in Metric units. Values in parentheses are English equivalents.

[4] Exceeding maximum angle of operation may cause engine damage from insufficient lubrication.

[5] Lubricate threads with engine oil prior to assembly.

[6] Any and all horsepower (hp) references by Kohler are Certified Power Ratings and per SAE J1940 & J1995 hp standards. Details on Certified Power Ratings can be found at KohlerEngines.com.

Specifications

TORQUE SPECIFICATIONS[3,5]	XT-6	XTR-6	XT-7	XTR-7
Crankcase				
Oil Drain Plug[7]	13.6 N·m (120 in. lb.)			
Oil Pan Screw	11.0 N·m (98 in. lb.)		14.7 N·m (130 in. lb.)	
Cylinder Head				
Fastener (torque in 2 increments)	first to 14 N·m (123 in. lb.) finally to 27.8 N·m (246 in. lb.)			
Flywheel				
Retaining Nut	51.5 N·m (38 ft. lb.)			
Fuel Tank				
Bracket to Crankcase Stud	8 N·m (71 in. lb.)			
Bracket to Tank Fastener	4.5 N·m (40 in. lb.)			
Governor				
Lever Fastener	9.5 N·m (84 in. lb.)			
Gear Fastener	9.5 N·m (84 in. lb.)			
Ignition				
Spark Plug	27 N·m (20 ft. lb.)			
Module Fastener	10 N·m (88 in. lb.)			
Screw	10 N·m (88 in. lb.)			
Muffler				
Exhaust Stud	5.0 N·m (44 in. lb.)			
Exhaust Stud Nut Fastener	9.5 N·m (84 in. lb.)			
Retractable Starter				
Fastener	8 N·m (71 in. lb.)			
Rocker Arm				
Stud	13.6 N·m (120 in. lb.)			
Pivot Jam Nut	9.5 N·m (84 in. lb.)			
Speed Control				
Bracket Assembly Fastener	8 N·m (71 in. lb.)			
Valve Cover				
Fastener	8 N·m (71 in. lb.)			

CLEARANCE SPECIFICATIONS[3]	XT-6	XTR-6	XT-7	XTR-7
Camshaft				
End Play	0.3/0.85 mm (0.0118/0.0335 in.)			
Running Clearance	0.013/0.0555 mm (0.00051/0.00217 in.)			

[3] Values are in Metric units. Values in parentheses are English equivalents.

[5] Lubricate threads with engine oil prior to assembly.

[7] Apply thread sealant around three full threads before assembly. No excess sealant allowed on inside or outside of joint. Threads with preapplied sealant do not require use of additional sealant. Approved sealants include Perma-Loc LH 150, Perma-Loc MM 115, Perma-Loc HH 120, Perma-Loc HL 126.

CLEARANCE SPECIFICATIONS[3]	XT-6	XTR-6	XT-7	XTR-7
Connecting Rod				
Connecting Rod-to-Crankpin Running Clearance New	0.025/0.045 mm (0.0009/0.0017 in.)			
Connecting Rod-to-Crankpin Side Clearance New	0.03/0.48 mm (0.00118/0.0189 in.)		0.13/0.58 mm (0.0051/0.0228 in.)	
Connecting Rod-to-Piston Pin Running Clearance	0.008/0.025 mm (0.0003/0.0009 in.)			
Piston Pin End I.D. New @ 21°C (70°F)	13.006/13.017 mm (0.5120/0.5125 in.)		18.006/18.017 mm (0.7088/0.7093 in.)	
Crankcase				
Governor Cross Shaft Bore I.D. New	6.000/6.024 mm (0.2362/0.2372 in.)			
Crankshaft				
End Play (free)	0.427/1.298 mm (0.0168/0.05110 in.)			
Bore in Oil Pan I.D. Early Models Later Models	25.400/25.421 mm (0.9999/1.0008 in.) 27.050/27.071 mm (1.06496/1.06578 in.)			
Bore in Oil Pan Running Clearance Early Models Later Models	0.015/0.051 mm (0.0005/0.002 in.) 0.008/0.121 mm (0.0031/0.00476 in.)			
Bearing (flywheel) Journal O.D. O.D. – Max. Wear Limit Max. Taper Max. Out-of-Round	24.975/24.989 mm (0.9832/0.9838 in.) 0.025 mm (0.0009 in.) 0.025 mm (0.0009 in.)			
Bearing (PTO) Journal O.D. Early Models Later Models Max. Taper Max. Out-of-Round	25.370/25.385 mm (0.9988/0.9994 in.) 27.105/27.092 mm (1.0671/1.0666 in.) 0.025 mm (0.0009 in.) 0.025 mm (0.0009 in.)			
Connecting Rod Journal O.D. New Max. Taper Max. Out-of-Round	29.985/29.995 mm (1.1805/1.1809 in.) 0.010 mm (0.0004 in.) 0.010 mm (0.0004 in.)			
Cylinder Bore				
Bore I.D.	65.00/65.02 mm (2.559/2.560 in.)		70.00/70.02 mm (2.755/2.756 in.)	
Max. Out-of-Round Max. Taper	0.0127 mm (0.0005 in.) 0.0127 mm (0.0005 in.)			
Cylinder Head				
Max. Out-of-Flatness	0.08 mm (0.003 in.)			
Governor				
Governor Cross Shaft -to-Crankcase Running Clearance	0.020/0.064 mm (0.0007/0.0025 in.)			
Cross Shaft O.D. New	5.96/5.98 mm (0.2346/0.2354 in.)			
Gear Shaft O.D. New	6.01/6.03 mm (0.2366/0.2374 in.)			
Governor Gear Shaft-to-Governor Gear Running Clearance	0.09/0.19 mm (0.0035/0.0074 in.)			

[3] Values are in Metric units. Values in parentheses are English equivalents.

Specifications

CLEARANCE SPECIFICATIONS[3]	XT-6	XTR-6	XT-7	XTR-7

Ignition

Spark Plug Gap	0.76 mm (0.030 in.)
Module Air Gap	0.254 mm (0.010 in.)

Piston, Piston Rings, and Piston Pin

Pin Bore I.D.	13.002/13.008 mm (0.5118/0.5121 in.)	18.000/18.008 mm (0.7086/0.7089 in.)
Pin O.D.	12.990/12.996 mm (0.5114/0.5116 in.)	17.990/17.996 mm (0.7082/0.7085 in.)
Top and Center Compression Ring Side Clearance New Bore	0.02/0.06 mm (0.0007/0.0023 in.)	
Top and Center Compression Ring End Gap New Bore	0.025/0.040 mm (0.0009/0.0015 in.)	
Thrust Face O.D.	64.975/64.985 mm (0.2558/0.2558 in.)	69.960/69.980 mm (2.7543/2.7551 in.)
Piston Thrust Face-to-Cylinder Bore Running Clearance	0.025/0.035 mm (0.0010/0.0014 in.)	0.020/0.060 mm (0.0007/0.0024 in.)

Valves and Valve Lifters

Intake and Exhaust Valve Lash[8]	0.0762/0.127 mm (0.003/0.005 in.)
Intake Valve Stem-to-Valve Guide Running Clearance	0.020/0.047 mm (0.0007/0.0018 in.)
Exhaust Valve Stem-to-Valve Guide Running Clearance	0.055/0.082 mm (0.0021/0.0032 in.)
Intake Valve Guide I.D.	5.500/5.512 mm (0.2165/0.2170 in.)
Intake Valve Stem Diameter	5.465/5.480 mm (0.2151/0.2157 in.)
Exhaust Valve Guide I.D.	5.500/5.512 mm (0.2165/0.2170 in.)
Exhaust Valve Stem Diameter	5.430/5.445 mm (0.2137/0.2143 in.)
Nominal Valve Face Angle	25°, 45°, 60°

[3] Values are in Metric units. Values in parentheses are English equivalents.

[8] Check valve lash every 100 hours; adjust as required.

GENERAL TORQUE VALUES

English Fastener Torque Recommendations for Standard Applications				
	Bolts, Screws, Nuts and Fasteners Assembled Into Cast Iron or Steel			Grade 2 or 5 Fasteners Into Aluminum
Size	Grade 2	Grade 5	Grade 8	
Tightening Torque: N·m (in. lb.) ± 20%				
8-32	2.3 (20)	2.8 (25)	—	2.3 (20)
10-24	3.6 (32)	4.5 (40)	—	3.6 (32)
10-32	3.6 (32)	4.5 (40)	—	—
1/4-20	7.9 (70)	13.0 (115)	18.7 (165)	7.9 (70)
1/4-28	9.6 (85)	15.8 (140)	22.6 (200)	—
5/16-18	17.0 (150)	28.3 (250)	39.6 (350)	17.0 (150)
5/16-24	18.7 (165)	30.5 (270)	—	—
3/8-16	29.4 (260)	—	—	—
3/8-24	33.9 (300)	—	—	—
Tightening Torque: N·m (ft. lb.) ± 20%				
5/16-24	—	—	40.7 (30)	—
3/8-16	—	47.5 (35)	67.8 (50)	—
3/8-24	—	54.2 (40)	81.4 (60)	—
7/16-14	47.5 (35)	74.6 (55)	108.5 (80)	—
7/16-20	61.0 (45)	101.7 (75)	142.5 (105)	—
1/2-13	67.8 (50)	108.5 (80)	155.9 (115)	—
1/2-20	94.9 (70)	142.4 (105)	223.7 (165)	—
9/16-12	101.7 (75)	169.5 (125)	237.3 (175)	—
9/16-18	135.6 (100)	223.7 (165)	311.9 (230)	—
5/8-11	149.5 (110)	244.1 (180)	352.6 (260)	—
5/8-18	189.8 (140)	311.9 (230)	447.5 (330)	—
3/4-10	199.3 (147)	332.2 (245)	474.6 (350)	—
3/4-16	271.2 (200)	440.7 (325)	637.3 (470)	—

Metric Fastener Torque Recommendations for Standard Applications						
	Property Class					Noncritical Fasteners Into Aluminum
Size	4.8	5.8	8.8	10.9	12.9	
Tightening Torque: N·m (in. lb.) ± 10%						
M4	1.2 (11)	1.7 (15)	2.9 (26)	4.1 (36)	5.0 (44)	2.0 (18)
M5	2.5 (22)	3.2 (28)	5.8 (51)	8.1 (72)	9.7 (86)	4.0 (35)
M6	4.3 (38)	5.7 (50)	9.9 (88)	14.0 (124)	16.5 (146)	6.8 (60)
M8	10.5 (93)	13.6 (120)	24.4 (216)	33.9 (300)	40.7 (360)	17.0 (150)
Tightening Torque: N·m (ft. lb.) ± 10%						
M10	21.7 (16)	27.1 (20)	47.5 (35)	66.4 (49)	81.4 (60)	33.9 (25)
M12	36.6 (27)	47.5 (35)	82.7 (61)	116.6 (86)	139.7 (103)	61.0 (45)
M14	58.3 (43)	76.4 (56)	131.5 (97)	184.4 (136)	219.7 (162)	94.9 (70)

Torque Conversions	
N·m = in. lb. x 0.113	in. lb. = N·m x 8.85
N·m = ft. lb. x 1.356	ft. lb. = N·m x 0.737

Tools and Aids

Certain quality tools are designed to help you perform specific disassembly, repair, and reassembly procedures. By using these tools, you can properly service engines easier, faster, and safer! In addition, you'll increase your service capabilities and customer satisfaction by decreasing engine downtime.

Here is a list of tools and their source.

SEPARATE TOOL SUPPLIERS

Kohler Tools
Contact your local Kohler source of supply.

SE Tools
415 Howard St.
Lapeer, MI 48446
Phone 810-664-2981
Toll Free 800-664-2981
Fax 810-664-8181

Design Technology Inc.
768 Burr Oak Drive
Westmont, IL 60559
Phone 630-920-1300
Fax 630-920-0011

TOOLS

Description	Source/Part No.
Alcohol Content Tester For testing alcohol content (%) in reformulated/oxygenated fuels.	Kohler 25 455 11-S
Camshaft Endplay Plate For checking camshaft endplay.	SE Tools KLR-82405
Camshaft Seal Protector (Aegis) For protecting seal during camshaft installation.	SE Tools KLR-82417
Cylinder Leakdown Tester For checking combustion retention and if cylinder, piston, rings, or valves are worn. Individual component available: Adapter 12 mm x 14 mm (Required for leakdown test on XT-6 engines)	Kohler 25 761 05-S Design Technology Inc. DTI-731-03
Dealer Tool Kit (Domestic) Complete kit of Kohler required tools. Components of 25 761 39-S: Ignition System Tester Cylinder Leakdown Tester Oil Pressure Test Kit Rectifier-Regulator Tester (120 V AC/60Hz)	Kohler 25 761 39-S Kohler 25 455 01-S Kohler 25 761 05-S Kohler 25 761 06-S Kohler 25 761 20-S
Dealer Tool Kit (International) Complete kit of Kohler required tools. Components of 25 761 42-S: Ignition System Tester Cylinder Leakdown Tester Oil Pressure Test Kit Rectifier-Regulator Tester (240 V AC/50Hz)	Kohler 25 761 42-S Kohler 25 455 01-S Kohler 25 761 05-S Kohler 25 761 06-S Kohler 25 761 41-S
Digital Vacuum/Pressure Tester For checking crankcase vacuum. Individual component available: Rubber Adapter Plug	Design Technology Inc. DTI-721-01 Design Technology Inc. DTI-721-10
Electronic Fuel Injection (EFI) Diagnostic Software For Laptop or Desktop PC.	Kohler 25 761 23-S
EFI Service Kit For troubleshooting and setting up an EFI engine. Components of 24 761 01-S: Fuel Pressure Tester Noid Light 90° Adapter In-line "T" Fitting Code Plug, Red Wire Code Plug, Blue Wire Shrader Valve Adapter Hose	Kohler 24 761 01-S Design Technology Inc. DTI-019 DTI-021 DTI-023 DTI-035 DTI-027 DTI-029 DTI-037
Flywheel Holding Tool (CS) For holding flywheel of CS series engines.	SE Tools KLR-82407
Flywheel Puller For properly removing flywheel from engine.	SE Tools KLR-82408
Flywheel Strap Wrench For holding flywheel during removal.	SE Tools KLR-82409

TOOLS

Description	Source/Part No.
Hydraulic Valve Lifter Tool For removing and installing hydraulic lifters.	Kohler 25 761 38-S
Ignition System Tester For testing output on all systems, including CD.	Kohler 25 455 01-S
Inductive Tachometer (Digital) For checking operating speed (RPM) of an engine.	Design Technology Inc. DTI-110
Offset Wrench (K and M Series) For removing and reinstalling cylinder barrel retaining nuts.	Kohler 52 455 04-S
Oil Pressure Test Kit For testing/verifying oil pressure on pressure lubricated engines.	Kohler 25 761 06-S
Radiator Tester For pressure testing radiator and cap on Aegis liquid-cooled engines.	Kohler 25 455 10-S
Rectifier-Regulator Tester (120 volt current) **Rectifier-Regulator Tester (240 volt current)** For testing rectifier-regulators. Components of 25 761 20-S and 25 761 41-S: CS-PRO Regulator Test Harness Special Regulator Test Harness with Diode	Kohler 25 761 20-S Kohler 25 761 41-S Design Technology Inc. DTI-031 DTI-033
Spark Advance Module (SAM) Tester For testing SAM (ASAM and DSAM) on engines with SMART-SPARK™.	Kohler 25 761 40-S
Starter Servicing Kit (All Starters) For removing and reinstalling drive retaining rings and brushes. Individual component available: Starter Brush Holding Tool (Solenoid Shift)	SE Tools KLR-82411 SE Tools KLR-82416
Triad/OHC Timing Tool Set For holding cam gears and crankshaft in timed position while installing timing belt.	Kohler 28 761 01-S
Valve Guide Reamer (K and M Series) For properly sizing valve guides after installation.	Design Technology Inc. DTI-K828
Valve Guide Reamer O.S. (Command Series) For reaming worn valve guides to accept replacement oversize valves. Can be used in low-speed drill press or with handle below for hand reaming.	Kohler 25 455 12-S
Reamer Handle For hand reaming using Kohler 25 455 12-S reamer.	Design Technology Inc. DTI-K830
Valve Guide Service Kit (Courage, Aegis, Command, OHC) For servicing worn valve guides.	SE Tools KLR-82415

AIDS

Description	Source/Part No.
Camshaft Lubricant (Valspar ZZ613)	Kohler 25 357 14-S
Dielectric Grease (GE/Novaguard G661)	Kohler 25 357 11-S
Dielectric Grease	Loctite® 51360
Kohler Electric Starter Drive Lubricant (Inertia Drive)	Kohler 52 357 01-S
Kohler Electric Starter Drive Lubricant (Solenoid Shift)	Kohler 52 357 02-S
RTV Silicone Sealant Loctite® 5900® Heavy Body in 4 oz. aerosol dispenser. Only oxime-based, oil resistant RTV sealants, such as those listed, are approved for use. Loctite® Nos. 5900® or 5910® are recommended for best sealing characteristics.	Kohler 25 597 07-S Loctite® 5910® Loctite® Ultra Black 598™ Loctite® Ultra Blue 587™ Loctite® Ultra Copper 5920™
Spline Drive Lubricant	Kohler 25 357 12-S

FLYWHEEL HOLDING TOOL

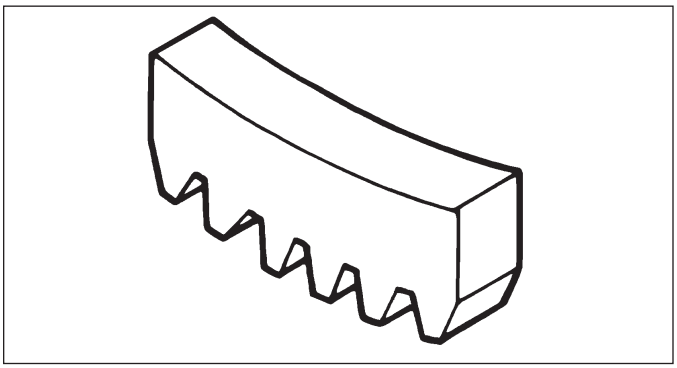

A flywheel holding tool can be made out of an old junk flywheel ring gear and used in place of a strap wrench.

1. Using an abrasive cut-off wheel, cut out a six tooth segment of ring gear as shown.
2. Grind off any burrs or sharp edges.
3. Invert segment and place it between ignition bosses on crankcase so tool teeth engage flywheel ring gear teeth. Bosses will lock tool and flywheel in position for loosening, tightening, or removing with a puller.

ROCKER ARM/CRANKSHAFT TOOL

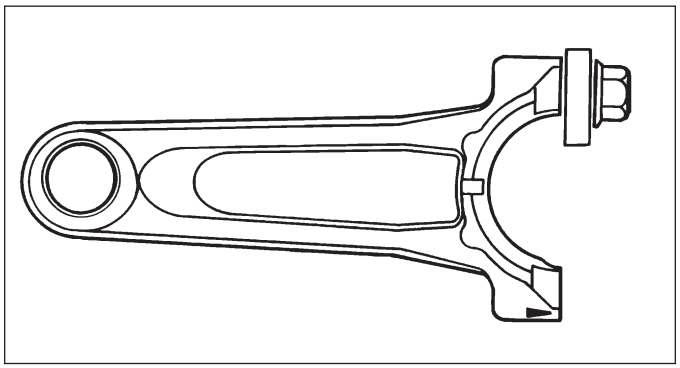

A spanner wrench to lift rocker arms or turn crankshaft may be made out of an old junk connecting rod.

1. Find a used connecting rod from a 10 HP or larger engine. Remove and discard rod cap.
2. Remove studs of a Posi-Lock rod or grind off aligning steps of a Command rod, so joint surface is flat.
3. Find a 1 in. long capscrew with correct thread size to match threads in connecting rod.
4. Use a flat washer with correct I.D. to slip on capscrew and approximately 1 in. O.D. Assemble capscrew and washer to joint surface of rod.

TROUBLESHOOTING GUIDE

When troubles occur, be sure to check simple causes which, at first, may seem too obvious to be considered. For example, a starting problem could be caused by an empty fuel tank.

Some general common causes of engine troubles are listed below and vary by engine specification. Use these to locate causing factors.

Engine Cranks But Will Not Start

- Battery connected backwards.
- Blown fuse.
- Carburetor solenoid malfunction.
- Choke not closing.
- Clogged fuel line or fuel filter.
- Diode in wiring harness failed in open circuit mode.
- DSAI or DSAM malfunction.
- Empty fuel tank.
- Faulty electronic control unit.
- Faulty ignition coil(s).
- Faulty spark plug(s).
- Fuel pump malfunction-vacuum hose clogged or leaking.
- Fuel shut-off valve closed.
- Ignition module(s) faulty or improperly gapped.
- Insufficient voltage to electronic control unit.
- Interlock switch is engaged or faulty.
- Key switch or kill switch in OFF position.
- Low oil level.
- Quality of fuel (dirt, water, stale, mixture).
- SMART-SPARK™ malfunction.
- Spark plug lead(s) disconnected.

Engine Starts But Does Not Keep Running

- Faulty carburetor.
- Faulty cylinder head gasket.
- Faulty or misadjusted choke or throttle controls.
- Fuel pump malfunction-vacuum hose clogged or leaking.
- Intake system leak.
- Loose wires or connections that intermittently ground ignition kill circuit.
- Quality of fuel (dirt, water, stale, mixture).
- Restricted fuel tank cap vent.

Engine Starts Hard

- Clogged fuel line or fuel filter.
- Engine overheated.
- Faulty ACR mechanism.
- Faulty or misadjusted choke or throttle controls.
- Faulty spark plug(s).
- Flywheel key sheared.
- Fuel pump malfunction-vacuum hose clogged or leaking.
- Interlock switch is engaged or faulty.
- Loose wires or connections that intermittently ground ignition kill circuit.
- Low compression.
- Quality of fuel (dirt, water, stale, mixture).
- Weak spark.

Engine Will Not Crank

- Battery is discharged.
- Faulty electric starter or solenoid.
- Faulty key switch or ignition switch.
- Interlock switch is engaged or faulty.
- Loose wires or connections that intermittently ground ignition kill circuit.
- Pawls not engaging in drive cup.
- Seized internal engine components.

Engine Runs But Misses

- Carburetor adjusted incorrectly.
- Engine overheated.
- Faulty spark plug(s).
- Ignition module(s) faulty or improperly gapped.
- Incorrect crankshaft position sensor air gap.
- Interlock switch is engaged or faulty.
- Loose wires or connections that intermittently ground ignition kill circuit.
- Quality of fuel (dirt, water, stale, mixture).
- Spark plug lead(s) disconnected.
- Spark plug lead boot loose on plug.
- Spark plug lead loose.

Engine Will Not Idle

- Engine overheated.
- Faulty spark plug(s).
- Idle fuel adjusting needle(s) improperly set.
- Idle speed adjusting screw improperly set.
- Inadequate fuel supply.
- Low compression.
- Quality of fuel (dirt, water, stale, mixture).
- Restricted fuel tank cap vent.

Engine Overheats

- Cooling fan broken.
- Excessive engine load.
- Fan belt failed/off.
- Faulty carburetor.
- High crankcase oil level.
- Lean fuel mixture.
- Low cooling system fluid level.
- Low crankcase oil level.
- Radiator, and/or cooling system components clogged, restricted, or leaking.
- Water pump belt failed/broken.
- Water pump malfunction.

Engine Knocks

- Excessive engine load.
- Hydraulic lifter malfunction.
- Incorrect oil viscosity/type.
- Internal wear or damage.
- Low crankcase oil level.
- Quality of fuel (dirt, water, stale, mixture).

Engine Loses Power

- Dirty air cleaner element.
- Engine overheated.
- Excessive engine load.
- Restricted exhaust.
- Faulty spark plug(s).
- High crankcase oil level.
- Incorrect governor setting.
- Low battery.
- Low compression.
- Low crankcase oil level.
- Quality of fuel (dirt, water, stale, mixture).

Engine Uses Excessive Amount of Oil

- Loose or improperly torqued fasteners.
- Blown head gasket/overheated.
- Breather reed broken.
- Clogged, broken, or inoperative crankcase breather.
- Crankcase overfilled.
- Incorrect oil viscosity/type.
- Worn cylinder bore.
- Worn or broken piston rings.
- Worn valve stems/valve guides.

Oil Leaks from Oil Seals, Gaskets

- Breather reed broken.
- Clogged, broken, or inoperative crankcase breather.
- Loose or improperly torqued fasteners.
- Piston blow by, or leaky valves.
- Restricted exhaust.

EXTERNAL ENGINE INSPECTION

NOTE: It is good practice to drain oil at a location away from workbench. Be sure to allow ample time for complete drainage.

Before cleaning or disassembling engine, make a thorough inspection of its external appearance and condition. This inspection can give clues to what might be found inside engines (and cause) when it is disassembled.

- Check for buildup of dirt and debris on crankcase, cooling fins, grass screen, and other external surfaces. Dirt or debris on these areas can cause overheating.
- Check for obvious fuel and oil leaks, and damaged components. Excessive oil leakage can indicate a clogged or inoperative breather, worn or damaged seals or gaskets, or loose fasteners.
- Check air cleaner cover and base for damage or indications of improper fit and seal.
- Check air cleaner element. Look for holes, tears, cracked or damaged sealing surfaces, or other damage that could allow unfiltered air into engine. A dirty or clogged element could indicate insufficient or improper maintenance.
- Check carburetor throat for dirt. Dirt in throat is further indication that air cleaner was not functioning properly.
- Check if oil level is within operating range on dipstick. If it is above, sniff for gasoline odor.
- Check condition of oil. Drain oil into a container; it should flow freely. Check for metal chips and other foreign particles.

  Sludge is a natural by-product of combustion; a small accumulation is normal. Excessive sludge formation could indicate over rich fuel settings, weak ignition, overextended oil change interval or wrong weight or type of oil was used.

CLEANING ENGINE

	⚠ WARNING
	Cleaning Solvents can cause severe injury or death. Use only in well ventilated areas away from ignition sources.
Carburetor cleaners and solvents are extremely flammable. Follow cleaner manufacturer's warnings and instructions on its proper and safe use. Never use gasoline as a cleaning agent.	

After inspecting external condition of engine, clean engine thoroughly before disassembly. Clean individual components as engine is disassembled. Only clean parts can be accurately inspected and gauged for wear or damage. There are many commercially available cleaners that will quickly remove grease, oil, and grime from engine parts. When such a cleaner is used, follow manufacturer's instructions and safety precautions carefully.

Make sure all traces of cleaner are removed before engine is reassembled and placed into operation. Even small amounts of these cleaners can quickly break down lubricating properties of engine oil.

CRANKCASE VACUUM TEST

	⚠ WARNING
	Carbon Monoxide can cause severe nausea, fainting or death. Avoid inhaling exhaust fumes.
Engine exhaust gases contain poisonous carbon monoxide. Carbon monoxide is odorless, colorless, and can cause death if inhaled.	

	⚠ WARNING
	Rotating Parts can cause severe injury. Stay away while engine is in operation.
Keep hands, feet, hair, and clothing away from all moving parts to prevent injury. Never operate engine with covers, shrouds, or guards removed.	

A partial vacuum should be present in crankcase when engine is operating. Pressure in crankcase (normally caused by a clogged or improperly assembled breather) can cause oil to be forced out at oil seals, gaskets, or other available spots.

Crankcase vacuum is best measured with either a water manometer or a vacuum gauge. Complete instructions are provided in kits.

To test crankcase vacuum with manometer:

1. Insert rubber stopper into oil fill hole. Be sure pinch clamp is installed on hose and use tapered adapters to connect hose between stopper and one manometer tube. Leave other tube open to atmosphere. Check that water level in manometer is at 0 line. Make sure pinch clamp is closed.
2. Start engine and run no-load high speed.
3. Open clamp and note water level in tube.

   Level in engine side should be a minimum of 10.2 cm (4 in.) above level in open side.

   If level in engine side is less than specified (low/no vacuum), or level in engine side is lower than level in open side (pressure), check for conditions in table below.
4. Close pinch clamp before stopping engine.

To test crankcase vacuum with vacuum/pressure gauge:

1. Remove dipstick or oil fill plug/cap.
2. Install adapter into oil fill//dipstick tube opening, upside down over end of a small diameter dipstick tube, or directly into engine if a tube is not used. Insert barbed gauge fitting into hole in stopper.
3. Run engine and observe gauge reading.

   Analog tester–needle movement to left of 0 is a vacuum, and movement to right indicates a pressure.

   Digital tester–depress test button on top of tester.

   Crankcase vacuum should be a minimum of 10.2 cm (4 in.) of water. If reading is below specification, or if pressure is present, check table below for possible causes and conclusions.

Condition	Conclusion
Crankcase breather clogged or inoperative.	NOTE: If breather is integral part of valve cover and cannot be serviced separately, replace valve cover and recheck pressure. Disassemble breather, clean parts thoroughly, check sealing surfaces for flatness, reassemble, and recheck pressure.
Seals and/or gaskets leaking. Loose or improperly torque fasteners.	Replace all worn or damaged seals and gaskets. Make sure all fasteners are tightened securely. Use appropriate torque valves and sequences when necessary.
Piston blow by or leaky valves (confirm by inspecting components).	Recondition piston, rings, cylinder bore, valves and valves guides.
Restricted exhaust.	Check exhaust screen/spark arrestor (if equipped). Clean or replace as needed. Repair or replace any other damaged/restricted muffler or exhaust system parts.

COMPRESSION TEST

For Command Twins:

A compression test is best performed on a warm engine. Clean any dirt or debris away from base of spark plug(s) before removing them. Be sure choke is off, and throttle is wide open during test. Compression should be at least 160 psi and should not vary more than 15% between cylinders.

All other models:

These engines are equipped with an automatic compression release (ACR) mechanism. It is difficult to obtain an accurate compression reading because of ACR mechanism. As an alternative, use cylinder leakdown test described below.

CYLINDER LEAKDOWN TEST

A cylinder leakdown test can be a valuable alternative to a compression test. By pressurizing combustion chamber from an external air source you can determine if valves or rings are leaking, and how badly.

Cylinder leakdown tester is a relatively simple, inexpensive leakdown tester for small engines. This tester includes a quick-connect for attaching adapter hose and a holding tool.

1. Run engine for 3-5 minutes to warm it up.
2. Remove spark plug(s) and air filter from engine.
3. Rotate crankshaft until piston (of cylinder being tested) is at top dead center (TDC) of compression stroke. Hold engine in this position while testing. Holding tool supplied with tester can be used if PTO end of crankshaft is accessible. Lock holding tool onto crankshaft. Install a 3/8 in. breaker bar into hole/slot of holding tool, so it is perpendicular to both holding tool and crankshaft PTO.

   If flywheel end is more accessible, use a breaker bar and socket on flywheel nut/screw to hold it in position. An assistant may be needed to hold breaker bar during testing. If engine is mounted in a piece of equipment, it may be possible to hold it by clamping or wedging a driven component. Just be certain that engine cannot rotate off of TDC in either direction.
4. Install adapter into spark plug hole, but do not attach it to tester at this time.
5. Turn regulator knob completely counterclockwise.
6. Connect an air source of at least 50 psi to tester.
7. Turn regulator knob clockwise (increase direction) until gauge needle is in yellow set area at low end of scale.
8. Connect tester quick-connect to adapter hose. While firmly holding engine at TDC, gradually open tester valve. Note gauge reading and listen for escaping air at combustion air intake, exhaust outlet, and crankcase breather.

Condition	Conclusion
Air escaping from crankcase breather.	Ring or cylinder worn.
Air escaping from exhaust system.	Defective exhaust valve/improper seating.
Air escaping from intake.	Defective intake valve/improper seating.
Gauge reading in low (green) zone.	Piston rings and cylinder in good condition.
Gauge reading in moderate (yellow) zone.	Engine is still usable, but there is some wear present. Customer should start planning for overhaul or replacement.
Gauge reading in high (red) zone.	Rings and/or cylinder have considerable wear. Engine should be reconditioned or replaced.

AIR CLEANER

These systems are CARB/EPA certified and components should not be altered or modified in any way.

Air Cleaner Components

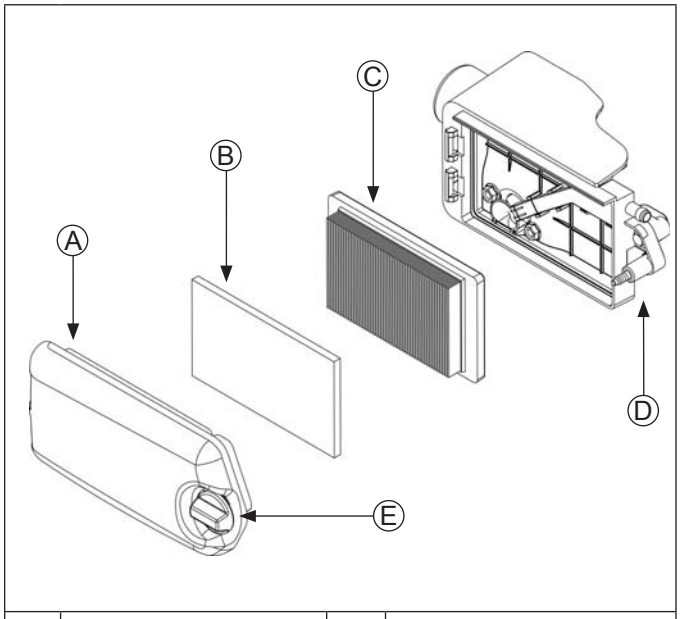

A	Air Cleaner Cover	**B**	Precleaner
C	Paper Element	**D**	Base
E	Air Cleaner Knob		

NOTE: Operating engine with loose or damaged air cleaner components could cause premature wear and failure. Replace all bent or damaged components.

NOTE: Paper element cannot be blown out with compressed air.

Loosen knob and remove air cleaner cover.

Precleaner (if equipped)

1. Remove precleaner.
2. Replace or wash precleaner in warm water with detergent. Rinse and allow to air dry.
3. Reinstall precleaner into cover, aligning hole in precleaner with upper cover knob.

Paper Element

1. Remove paper element from base and replace.
2. Install element with pleated side out and seat rubber seal onto edges of base.

Foam Element

1. Remove foam element from base and replace.
2. Install element with foam side out and seat rubber seal onto edges of base.

Reinstall air cleaner cover and secure with knob.

BREATHER TUBE

Make sure both ends of breather tube are properly connected.

AIR COOLING

⚠ WARNING

Hot Parts can cause severe burns.

Do not touch engine while operating or just after stopping.

Never operate engine with heat shields or guards removed.

Proper cooling is essential. To prevent over heating, clean screens, cooling fins, and other external surfaces of engine. Avoid spraying water at wiring harness or any electrical components. Refer to Maintenance Schedule.

Fuel System

Typical carbureted fuel system and related components include:

- Fuel tank.
- Fuel line.
- In-line fuel filter.
- Fuel tank filter (in-nipple).
- Fuel shut-off valve (if equipped).
- Carburetor.

Fuel tank outlet is located above carburetor inlet, allowing gravity to feed fuel through in-line filter and fuel line to carburetor.

Fuel enters carburetor through fuel shut-off valve and sediment bowl and then goes to carburetor float bowl. Fuel is drawn into carburetor body and mixed with air. This fuel-air mixture is then burned in engine combustion chamber.

FUEL RECOMMENDATIONS

Refer to Maintenance.

FUEL LINE

Low permeation fuel line must be installed on carbureted Kohler Co. engines to maintain EPA and CARB regulatory compliance.

FUEL SHUT-OFF (if equipped)

Some engines are equipped with a fuel shut-off located at carburetor. It controls fuel flow from tank to carburetor.

FUEL SYSTEM TESTS

When engine starts hard, or turns over but will not start, fuel system might be causing problems. Test fuel system by performing following tests.

1. Check for fuel in combustion chamber.
   a. Disconnect and ground spark plug lead.
   b. Close choke on carburetor.
   c. Crank engine several times.
   d. Remove spark plug and check for fuel at tip.
2. Check for fuel flow from tank to carburetor.
   a. Remove fuel line from inlet fitting of carburetor.
   b. Use an approved fuel container to catch fuel, and hold line below bottom of tank to observe fuel flow.
3. Check operation of fuel shut-off valve.
   a. Remove fuel sediment bowl under inlet fitting of carburetor.
   b. Turn fuel shut-off valve ON and OFF and observe operation.

Condition	Conclusion
Fuel at tip of spark plug.	Fuel is reaching combustion chamber.
No fuel at tip of spark plug.	Check fuel flow from fuel tank (step 2).
Fuel flows from fuel line.	Check operation of fuel shut-off valve (step 3).
No fuel flow from fuel line.	Check fuel tank vent, in-line filter threaded into tank, and fuel line. Correct any observed problem and reconnect line.
Fuel flows from valve.	Check for dirt and water in sediment bowl and screen. Clean bowl and screen as needed. Check for faulty carburetor, refer to Carburetor.
No fuel flows from valve.	Check for a restriction in fuel shut-off valve or inlet elbow.

CARBURETOR

	WARNING Explosive Fuel can cause fires and severe burns. Do not fill fuel tank while engine is hot or running.	Gasoline is extremely flammable and its vapors can explode if ignited. Store gasoline only in approved containers, in well ventilated, unoccupied buildings, away from sparks or flames. Spilled fuel could ignite if it comes in contact with hot parts or sparks from ignition. Never use gasoline as a cleaning agent.

Typical One-Barrel Carburetor Components

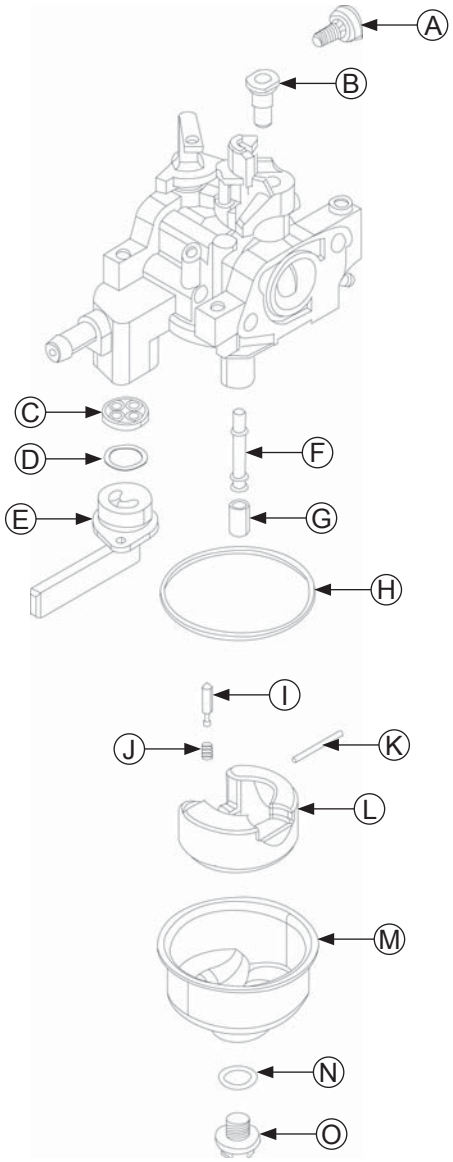

A	Low Idle Speed Adjusting Screw	**B**	Idle Jet
C	Fuel Shut-Off Gasket	**D**	Wave Washer
E	Fuel Shut-Off Valve	**F**	Main Nozzle Tube
G	Main Jet	**H**	Bowl Gasket
I	Fuel Inlet Needle	**J**	Spring
K	Hinge Pin	**L**	Float
M	Fuel Bowl	**N**	Bowl Retaining Screw Gasket
O	Bowl Retaining Screw		

These engines are equipped with a fixed main jet carburetor. Carburetor is designed to deliver correct fuel-to-air mixture to engine under all operating conditions. Idle mixture is set at factory and cannot be adjusted.

Troubleshooting Checklist

When engine starts hard, runs rough, or stalls at low idle speed, check these areas before adjusting or disassembling carburetor.

1. Make sure fuel tank is filled with clean, fresh gasoline.
2. Make sure fuel tank cap vent is not blocked and is operating properly.
3. Make sure fuel is reaching carburetor. This includes checking fuel shut-off valve, fuel tank filter screen, in-line fuel filter, fuel lines and fuel pump for restrictions or faulty components as necessary.
4. Make sure air cleaner base and carburetor are securely fastened to engine using gaskets in good condition.
5. Make sure air cleaner element (including precleaner if equipped) is clean and all air cleaner components are fastened securely.
6. Make sure ignition system, governor system, exhaust system, and throttle and choke controls are operating properly.

Troubleshooting-Carburetor Related Causes

Condition	Possible Cause	Conclusion
Engine starts hard, runs rough, or stalls at idle speed.	Low idle fuel mixture (some models)/ speed improperly adjusted.	Adjust idle speed screw or clean carburetor.
Engine runs rich (indicated by black, sooty exhaust smoke, misfiring, loss of speed and power, governor hunting, or excessive throttle opening).	Clogged air cleaner.	Clean or replace air cleaner.
	Choke partially closed during operation.	Check choke lever/linkage to ensure choke is operating properly.
	Dirt under fuel inlet needle.	Remove needle; clean needle and seat and blow with compressed air.
	Bowl vent or air bleeds plugged.	Clean vent, ports, and air bleeds. Blow out all passages with compressed air.
	Leaky, cracked, or damaged float.	Submerge float to check for leaks.
Engine runs lean (indicated by misfiring, loss of speed and power, governor hunting, or excessive throttle opening).	Idle holes plugged; dirt in fuel delivery channels.	Clean main fuel jet and all passages; blow out with compressed air.
Fuel leaks from carburetor.	Float damaged.	Submerge float to check for leaks. Replace float.
	Dirt under fuel inlet needle.	Remove needle; clean needle and seat and blow with compressed air.
	Bowl vents plugged.	Blow out with compressed air.
	Carburetor bowl gasket leaks.	Replace gasket.

Carburetor Circuits

Float
Fuel level in bowl is maintained by float and fuel inlet needle. Buoyant force of float stops fuel flow when engine is at rest. When fuel is being consumed, float will drop and fuel pressure will push inlet needle away from seat, allowing more fuel to enter bowl. When demand ceases, buoyant force of float will again overcome fuel pressure, rising to predetermined setting and stop flow.

Slow and Mid-Range
At low speeds engine operates only on slow circuit. As a metered amount of air is drawn through slow air bleed jets, fuel is drawn through main jet and further metered through slow jet. Air and fuel are mixed in body of slow jet and exit to idle progression (transfer port) chamber. From idle progression chamber, air fuel mixture is metered through idle port passage. At low idle air/fuel mixture is controlled by setting of idle fuel adjusting screws. This mixture is then mixed with main body of air and delivered to engine. As throttle plate opening increases, greater amounts of air/fuel mixture are drawn in through fixed and metered idle progression holes. As throttle plate opens further, vacuum signal becomes great enough at venturi so main circuit begins to work.

Main (high-speed)
At high speeds/loads engine operates on main circuit. As a metered amount of air is drawn through air jet, fuel is drawn through main jet. Air and fuel are mixed in main nozzles then enters main body of airflow where further mixing of fuel and air occurs. This mixture is then delivered to combustion chamber. Carburetor has a fixed main circuit; no adjustment is possible.

Carburetor Adjustments

NOTE: Carburetor adjustments should be made only after engine has warmed up.

Carburetor is designed to deliver correct fuel-to-air mixture to engine under all operating conditions. Main fuel jet is calibrated at factory and is not adjustable. Idle fuel adjusting needles are also set at factory and are not adjustable.

Low Idle Speed (RPM) Adjustment
NOTE: Actual low idle speed depends on application. Refer to equipment manufacturer's recommendations. Low idle speed for basic engines is 1800 RPM.

Place throttle control into idle or slow position. Turn low idle speed adjusting screw in or out to obtain allow idle speed of 1800 RPM (± 75 RPM).

Carburetor Servicing

⚠ WARNING

Accidental Starts can cause severe injury or death.

Disconnect and ground spark plug lead(s) before servicing.

Before working on engine or equipment, disable engine as follows: 1) Disconnect spark plug lead(s). 2) Disconnect negative (–) battery cable from battery.

NOTE: Main and slow jets are fixed and size specific and can be removed if required. Fixed jets for high altitudes are available.

- Inspect carburetor body for cracks, holes, and other wear or damage.
- Inspect float for cracks, holes, and missing or damaged float tabs. Check float hinge and shaft for wear or damage.
- Inspect fuel inlet needle and seat for wear or damage.

1. Perform removal procedures for appropriate air cleaner and carburetor outlined in Disassembly.
2. Clean exterior surfaces of dirt or foreign material before disassembling carburetor. Remove bowl retaining screws, and carefully separate fuel bowl from carburetor. Do not damage fuel bowl O-rings. Transfer any remaining fuel into an approved container. Save all parts. Fuel can also be drained prior to bowl removal by loosening/removing bowl drain screw.
3. Remove float pin and inlet needle. Seat for inlet needle is not serviceable and should not be removed.
4. Clean carburetor bowl and inlet seat areas as required.
5. Carefully remove main jet from carburetor. After main jet is removed, main nozzles can be removed through bottom of main towers. Note orientation/direction of nozzles. End with 2 raised shoulders should be out/down adjacent to main jets.
6. Save parts for cleaning and reuse unless a jet kit is also being installed. Clean slow jets using compressed air or carburetor cleaner, do not use wire.

NOTE: There are 2 O-rings on body of idle jet.

Carburetor is now disassembled for appropriate cleaning and installation of parts in overhaul kit. See instructions provided with repair kits for more detailed information.

High Altitude Operation

Engines may require a high altitude carburetor kit to ensure correct engine operation at altitudes above 1219 meters (4000 ft.). To obtain high altitude kit information or to find a Kohler authorized dealer visit KohlerEngines.com or call 1-800-544-2444 (U.S. and Canada).

This engine should be operated in its original configuration below 1219 meters (4000 ft.) as damage may occur if high altitude carburetor kit is installed and operated below 1219 meters (4000 ft.).

Auto Choke Troubleshooting (if equipped)

Auto Choke Components

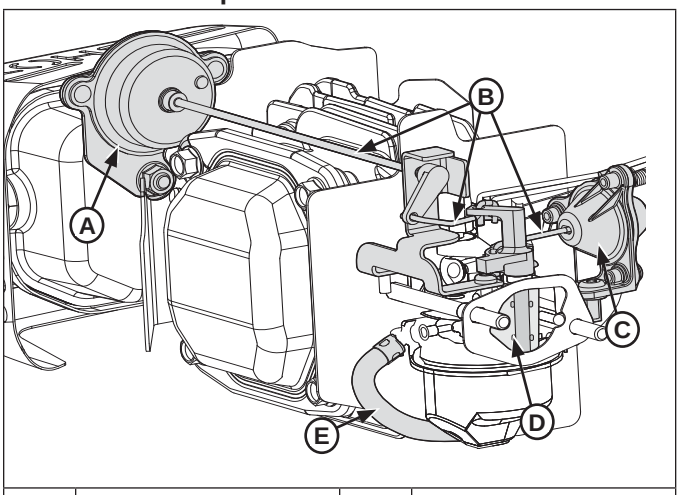

A	Bimetallic Spring Housing	**B**	Linkage
C	Diaphragm Assembly	**D**	Choke Plate
E	Vacuum Hose		

NOTE: Following procedures may be easier to perform with engine cover removed. Refer to Disassembly/Inspection and Service and Reassembly procedure.

A bimetallic spring reacts to muffler heat and moves linkage that opens or closes choke. A diaphragm that operates from intake manifold vacuum assists spring system. These two elements work together to operate a smooth choke system that facilitates easy reliable starting.

Use following procedures to troubleshoot auto choke system and its components. These procedures are to be performed on a cold engine.

Cover, Element, and Breather Cover

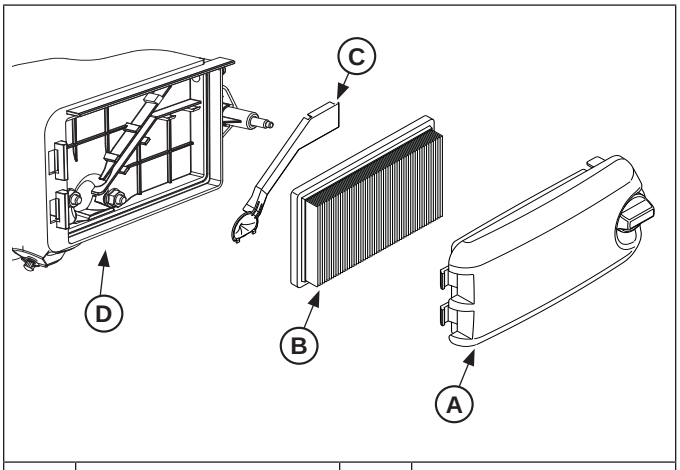

A	Air Cleaner Cover	**B**	Element
C	Breather Cover	**D**	Air Cleaner Base

1. Remove air cleaner cover, air cleaner, and breather cover from air cleaner base.

2. Check choke linkage for binding or debris build up. Gently actuate linkage and observe that choke plate has full range of movement (open and close).
3. Remove vacuum hose from carburetor vacuum fitting. Attach a vacuum gauge or manometer to carburetor vacuum fitting. Run engine while holding choke plate open. Gauge should indicate a vacuum with a minimum of 15" of water. If reading is correct, check again for binding of restricted linkage.
4. If vacuum indicated is less than 15" of water, problem is not an auto choke issue.

Diaphragm Assembly and Hose

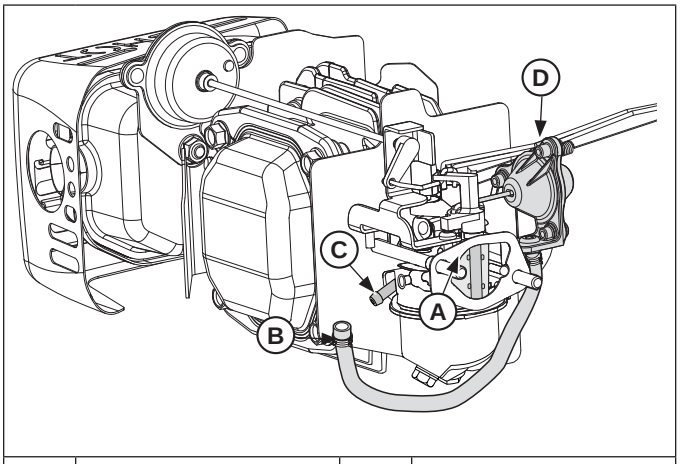

A	Choke Plate	**B**	Vacuum Hose
C	Vacuum Fitting	**D**	Diaphragm Assembly

5. Note position of choke plate. Attach a vacuum pump to vacuum hose. Choke plate should open 1/2 to 3/4 under vacuum and with a minimum of 15" of water. If diaphragm assembly is unable to open choke plate, check hose for cracks, leaks, or restrictions. If necessary replace vacuum hose. If hose is in working condition and choke plate fails to open with specified vacuum, or diaphragm fails to hold choke plate open for a minimum of 3 seconds, replace diaphragm assembly.
6. Attach vacuum hose to carburetor vacuum fitting.
7. Start engine. Upon start up choke plate should be 1/2 to 3/4 open. Choke plate should gradually change to full open position after 2 to 2-1/2 minutes of running. This action is performed by bimetallic spring assembly being heated. If choke plate fails to open, recheck linkage for binding. If necessary replace bimetallic spring assembly.

NOTE: Inspect to ensure choke linkage is not binding.

Choke Plate and Bimetallic Spring Housing

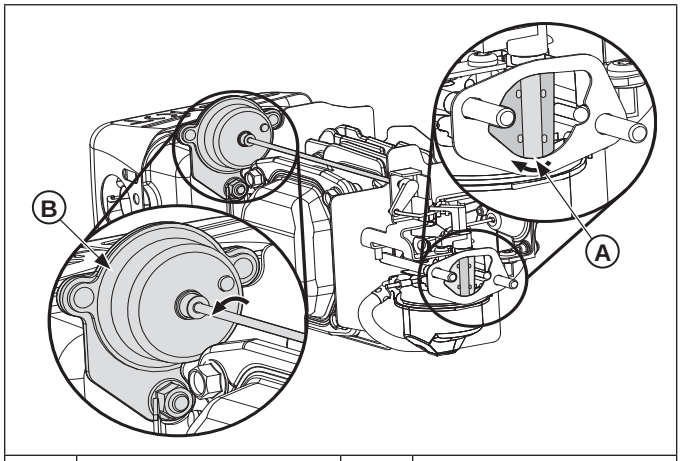

A	Choke Plate	**B**	Bimetallic Spring Assembly

GOVERNOR

Governor Components

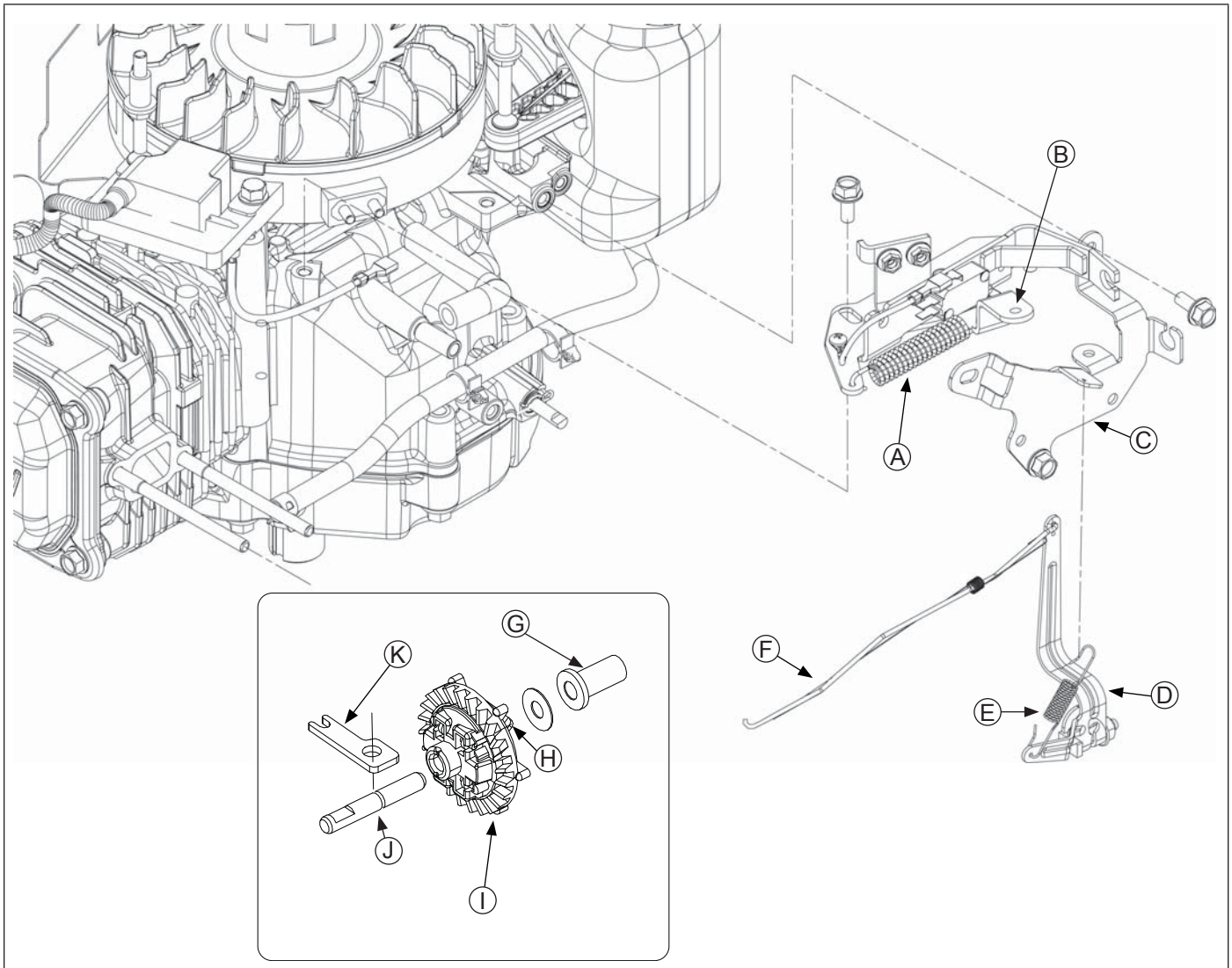

A	Control Spring	**B**	Intermediate Control Lever	**C**	Control Bracket	**D**	Governor Lever
E	Compression Spring	**F**	Linkage	**G**	Regulating Pin	**H**	Flyweight(s)
I	Governor Gear	**J**	Governor Gear Shaft	**K**	Governor Shaft Retainer		

Governed speed setting is determined by position of throttle control. It can be variable or constant, depending on engine application.

Governor is designed to hold engine speed constant under changing load conditions. Most engines are equipped with a centrifugal flyweight mechanical governor. Governor gear/flyweight mechanism of mechanical governor is mounted inside crankcase and is driven off gear on camshaft.

This governor design works as follows:

- Centrifugal force acting on rotating governor gear assembly causes flyweights to move outward as speed increases. Governor spring tension moves them inward as speed decreases.
- As flyweights move outward, they cause regulating pin to move outward.
- Regulating pin contacts tab on cross shaft causing shaft to rotate.
- One end of cross shaft protrudes through crankcase. Rotating action of cross shaft is transmitted to throttle lever of carburetor through external throttle linkage.
- When engine is at rest, and throttle is in fast position, tension of governor spring holds throttle plate open. When engine is operating, governor gear assembly is rotating. Force applied by regulating pin against cross shaft tends to close throttle plate. Governor spring tension and force applied by regulating pin balance each other during operation, to maintain engine speed.

- When load is applied and engine speed and governor gear speed decreases, governor spring tension moves governor arm to open throttle plate wider. This allows more fuel into engine, increasing engine speed. As speed reaches governed setting, governor spring tension and force applied by regulating pin will again offset each other to hold a steady engine speed.

Initial Governor Adjustment

Make this initial adjustment whenever governor arm is loosened or removed from cross shaft. To ensure proper adjustment, make sure throttle linkage is connected to both governor arm and throttle lever on carburetor.

1. Loosen governor lever adjustment screw.
2. Move governor lever away from carburetor (wide open throttle). Do not apply excess force that may flex or distort throttle link.
3. Grasp cross shaft with a pliers and turn shaft clockwise as far as it will go. Then torque nut to 9.5 N·m (84 in. lb.).
4. Rotate governor shaft clockwise until it stops.
5. Hold both in this position and torque governor lever bolt to 10 N·m (88.5 in. lb.).

These engines use a splash lubrication system, supplying necessary lubrication to crankshaft, camshaft, connecting rod, and valve train components.

Lubrication Components

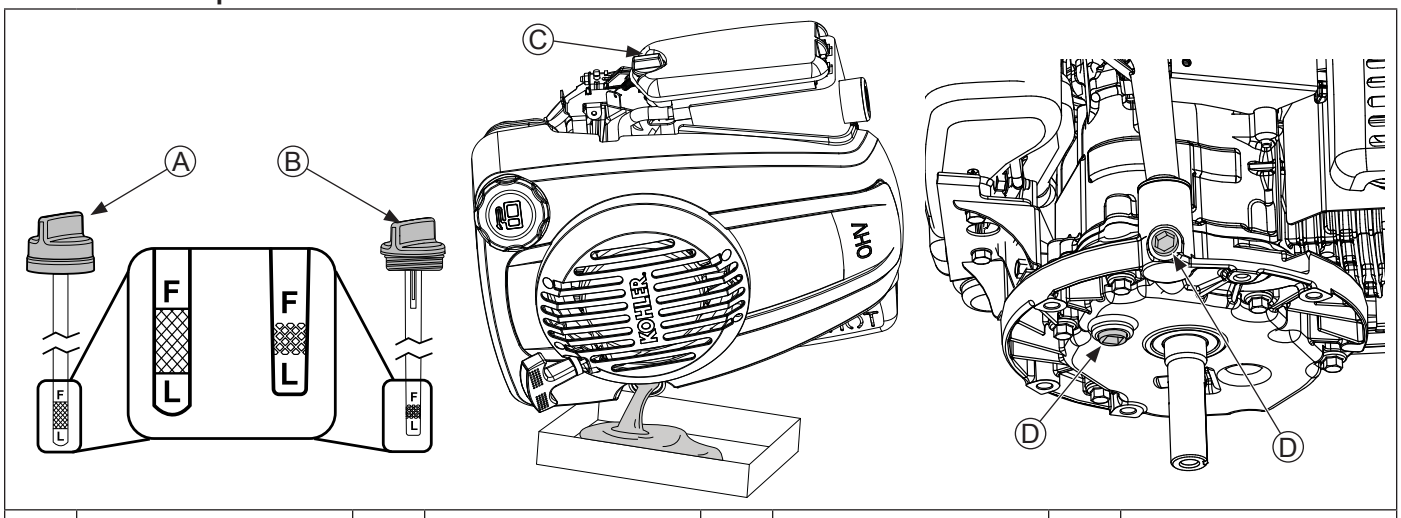

A	1/4 Turn Cap	**B**	Threaded Cap	**C**	Air Cleaner	**D**	Crankcase Plugs

OIL RECOMMENDATIONS

Refer to Maintenance.

CHECK OIL LEVEL

NOTE: To prevent extensive engine wear or damage, never run engine with oil level below or above operating range indicator on dipstick.

Ensure engine is cool. Clean oil fill cap/dipstick areas of any debris.

1. Remove dipstick; wipe oil off.
   a. 1/4 turn cap: reinsert dipstick into tube; press completely down and turn 1/4 turn.

   or

   b. Threaded cap: reinsert dipstick into tube; rest cap on tube, do not thread cap onto tube.
2. Remove dipstick; check oil level. Level should be at top of indicator on dipstick.
3. If oil is low on indicator, add oil up to top of indicator mark.
4. Reinstall and secure dipstick.

CHANGE OIL

Change oil while engine is warm.

Dipstick tube

1. Clean area around oil fill cap/dipstick.
2. Remove oil fill cap/dipstick. Tilt engine on its side with air cleaner facing up. Drain oil into appropriate container.
3. After crankcase is drained completely, tilt engine upright.
4. Fill crankcase with new oil. Level should be at top of indicator on dipstick.
5. Reinstall oil fill cap/dipstick and tighten securely.
6. Dispose of used oil in accordance with local ordinances.

Crankcase plug

1. Disable engine by disconnecting spark plug.
2. Clean area around oil fill cap/dipstick. Remove oil fill cap/dipstick.
3. Remove crankcase plug on bottom of engine; drain oil into appropriate container.
4. Apply thread sealant around three full threads of drain plug; reinstall drain plug. Torque drain plug to 13.6 N·m (120 in. lb.).
5. Fill crankcase with new oil. Level should be at top of indicator on dipstick.
6. Reinstall oil fill cap/dipstick and tighten securely.
7. Dispose of used oil in accordance with local ordinances.

SPARK PLUGS

CAUTION

Electrical Shock can cause injury.
Do not touch wires while engine is running.

Spark Plug Component and Details

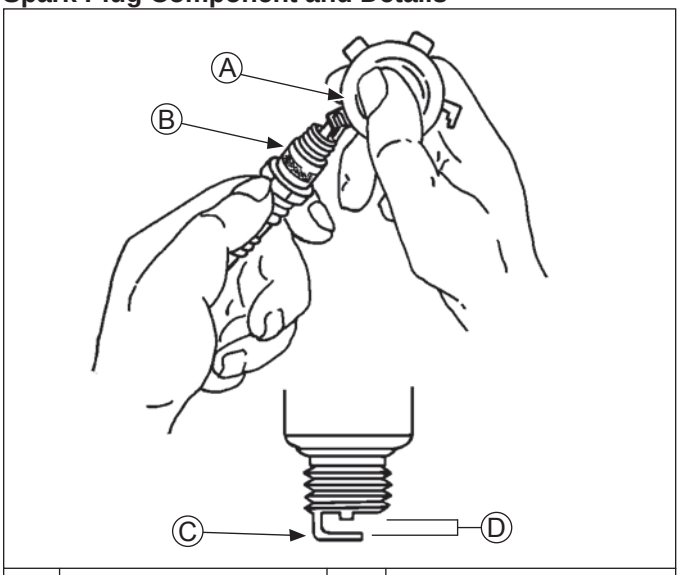

A	Wire Gauge	**B**	Spark Plug
C	Ground Electrode	**D**	Gap

NOTE: Do not clean spark plug in a machine using abrasive grit. Some grit could remain in spark plug and enter engine causing extensive wear and damage.

Engine misfire or starting problems are often caused by a spark plug that has improper gap or is in poor condition.

Engine is equipped with following spark plugs:

	XT-6/XTR-6	XT-7/XTR-7
Gap	0.76 mm (0.03 in.)	0.76 mm (0.03 in.)
Thread Size	12 mm	14 mm
Reach	19.1 mm (3/4 in.)	19.1 mm (3/4 in.)
Hex Size	18 mm (3/4 in.)	15.9 mm (5/8 in.)

Refer to Maintenance for Repairs/Service Parts.

Service

Clean out spark plug recess. Remove plug and replace.

1. Check gap using wire feeler gauge. Adjust gap to 0.76 mm (0.03 in.).
2. Install plug into cylinder head.
3. Torque plug to 27 N·m (20 ft. lb.).

Inspection

Inspect each spark plug as it is removed from cylinder head. Deposits on tip are an indication of general condition of piston rings, valves, and carburetor.

Normal and fouled plugs are shown in following photos:

Normal

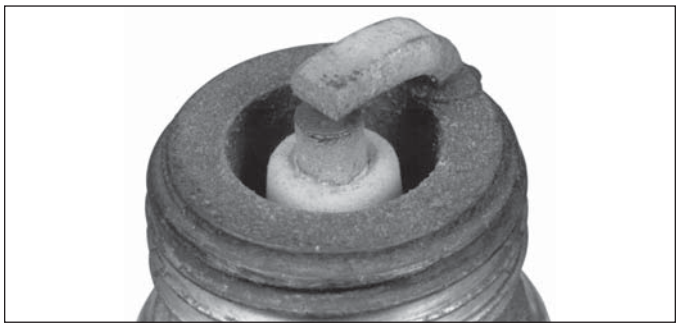

Plug taken from an engine operating under normal conditions will have light tan or gray colored deposits. If center electrode is not worn, plug can be set to proper gap and reused.

Worn

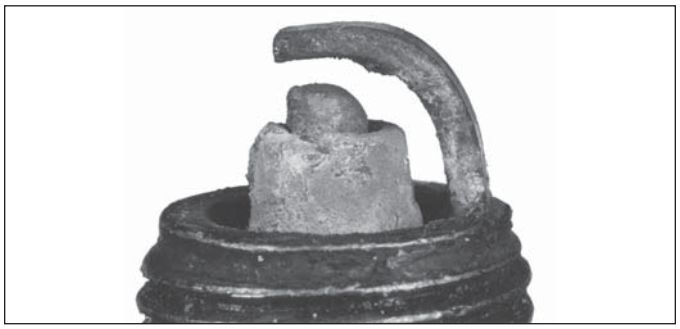

On a worn plug, center electrode will be rounded and gap will be greater than specified gap. Replace a worn spark plug immediately.

Wet Fouled

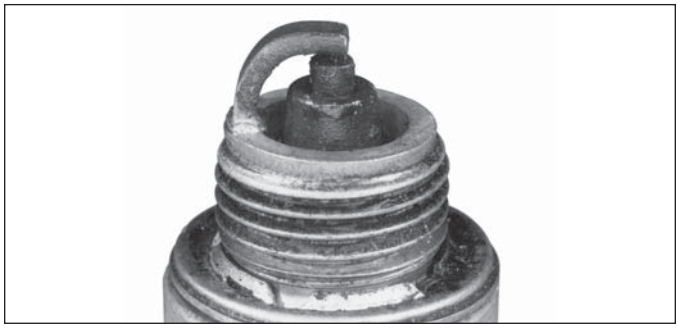

A wet plug is caused by excess fuel or oil in combustion chamber. Excess fuel could be caused by a restricted air cleaner, a carburetor problem, or operating engine with too much choke. Oil in combustion chamber is usually caused by a restricted air cleaner, a breather problem, worn piston rings, or valve guides.

Carbon Fouled

Soft, sooty, black deposits indicate incomplete combustion caused by a restricted air cleaner, over rich carburetion, weak ignition, or poor compression.

Overheated

Chalky, white deposits indicate very high combustion temperatures. This condition is usually accompanied by excessive gap erosion. Lean carburetor settings, an intake air leak, or incorrect spark timing are normal causes for high combustion temperatures.

ELECTRONIC IGNITION SYSTEM

These engines are equipped with dependable solid-state magneto ignition systems. Two types of ignition modules are used on these engines, capacitive discharge ignition (CDI), and inductive discharge ignition (IDI).

Both ignition systems are designed to be trouble free for life of engine. Other than periodically checking/replacing spark plugs, no maintenance or timing adjustments are necessary or possible. Mechanical systems do occasionally fail or break down. Refer to Troubleshooting to determine root of a reported problem.

Reported ignition problems are most often due to poor connections. Before beginning test procedure, check all external wiring. Be certain all ignition-related wires are connected, including spark plug leads. Be certain all terminal connections fit snugly. Make sure ignition switch is in run position.

CDI Module Operation (aluminum flywheel)

Ignition System Components

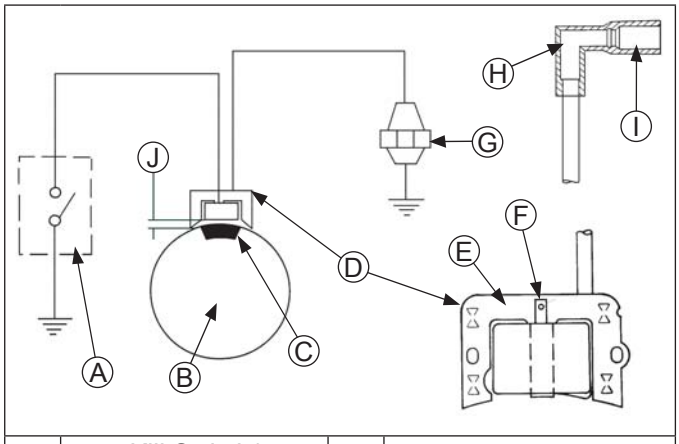

A	Kill Switch/ Off Position of Key Switch	**B**	Flywheel
C	Magnet	**D**	Ignition Module
E	Lamination	**F**	Kill Terminal
G	Spark Plug	**H**	Spark Plug Boot
I	Spark Plug Terminal	**J**	Air Gap 0.254 mm (0.010 in.)

As flywheel rotates and magnet passes CDI ignition module, magnetic field induces current in charging coil. Current pulse is rectified by a diode and this signal charges a high-voltage capacitor. As magnet completes its pass, a change in polarity of signal produced by flywheel magnet turns on semiconductor switch, and directly connects charged capacitor to primary coil of transformer. As capacitor discharges energy, low voltage at primary winding is transformed to high voltage in secondary winding of module. A high voltage pulse is then delivered to spark plug, where it arcs across electrode gap and ignites fuel in combustion chamber. This system consists of following components:

- Magnets, permanently affixed to flywheel.
- Spark plug with rubber boot.
- Electronic, capacitive discharge ignition module mounted on engine crankcase.
- Kill switch (or key switch); grounds module to stop engine.

IDI Module Operation (cast iron flywheel)

Ignition System Components

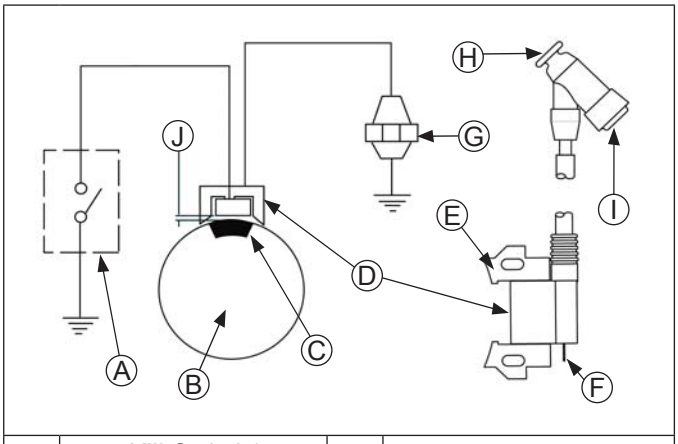

A	Kill Switch/ Off Position of Key Switch	**B**	Flywheel
C	Magnet	**D**	Ignition Module
E	Lamination	**F**	Kill Terminal
G	Spark Plug	**H**	Spark Plug Boot
I	Spark Plug Terminal	**J**	Air Gap 0.254 mm (0.010 in.)

As flywheel rotates and magnet passes IDI ignition module, magnetic field induces current in primary coil. As ignition magnet completes its pass, it induces current in a small triggering coil, which then turns on a semiconductor switch. This causes previously induced magnetic field in primary coil to collapse. As magnetic field collapses, it causes voltage in secondary coil to rise quickly. This sharp rise in voltage is sufficient to arc across spark plug's gap, and ignite fuel mixture in combustion chamber. This system consists of following components:

- Magnets, permanently affixed to flywheel.
- Spark plug with metal boot.
- Electronic, inductive discharge ignition module mounted on engine crankcase.
- Kill switch (or key switch); grounds module to stop engine.

Electronic Ignition Systems Tests

Test Ignition System

1. Make sure spark plug lead is connected to spark plug.
2. Check condition of spark plug. Make sure gap is set to 0.76 mm (0.030 in.).

Condition	Possible Cause	Conclusion
Spark plug is not receiving ignition pulse.	Spark Plug	Check gap and adjust if necessary; reinstall plug.
Spark plug in bad condition.	Spark Plug	Replace plug, set gap, and install.

Test for Spark

NOTE: To maintain engine speeds obtained during cranking, do not remove spark plug.

Test for spark with ignition tester.

1. Disconnect spark plug lead and connect to post terminal of tester. Connect clip to ground, not to spark plug.
2. Turn engine ignition switch to START/RUN position to initiate test.
3. Crank engine to minimum of 500 RPM, and observe tester. Visible and audible sparks should be produced.
4. Release switch to RUN position. Visible and audible sparks should be produced.

Condition	Possible Cause	Conclusion
Visible and audible sparks are produced.	Ignition Module	Ignition module is OK.
Visible and audible sparks are not produced.	Ignition Module or Wiring and Connections	Make sure ignition switch, kill switch or key switch is in RUN position. Check all safety and operator presence control switches (for example: flywheel brake kill switch) and other components, including wiring and connections for accidental grounding. If components, wiring, including terminals are all verified OK, test ignition module.

Test Ignition Module

1. Disconnect kill lead from terminal on ignition module.
2. Pull retractable starter or crank engine to a minimum of 500 RPM and check for spark.

Condition	Possible Cause	Conclusion
Visible and audible sparks are produced.	Ignition System or Wiring and Connections	Problem is elsewhere in system/ wiring.
Visible and audible sparks are not produced.	Ignition Module	Replace ignition module.

Starter System

NOTE: Do not crank engine continuously for more than 10 seconds. Allow a 60 second cool down period between starting attempts. Failure to follow these guidelines can burn out starter motor.

NOTE: If engine develops sufficient speed to disengage starter but does not keep running (a false start), engine rotation must be allowed to come to a complete stop before attempting to restart engine. If starter is engaged while flywheel is rotating, starter pinion and flywheel ring gear may clash and damage starter.

NOTE: If starter does not crank engine, shut off starter immediately. Do not make further attempts to start engine until condition is corrected.

NOTE: Do not drop starter or strike starter frame. Doing so can damage starter.

Engines in this series use inertia drive electric starters or retractable starters. Inertia drive electric starters are not serviceable.

XT electric starters use brake switch for an interlock (on ground). When bail is held down, switch in brake assembly completes circuit of ground for starter. If there is a no crank situation, cause could be brake assembly, battery, key switch, wiring harness, fuse, or starter itself.

RETRACTABLE STARTERS

	⚠ WARNING
	Uncoiling Spring can cause severe injury. Wear safety goggles or face protection when servicing retractable starter.
Retractable starters contain a powerful, recoil spring that is under tension. Always wear safety goggles when servicing retractable starters and carefully follow instructions in Retractable Starter for relieving spring tension.	

Retractable Starter Components

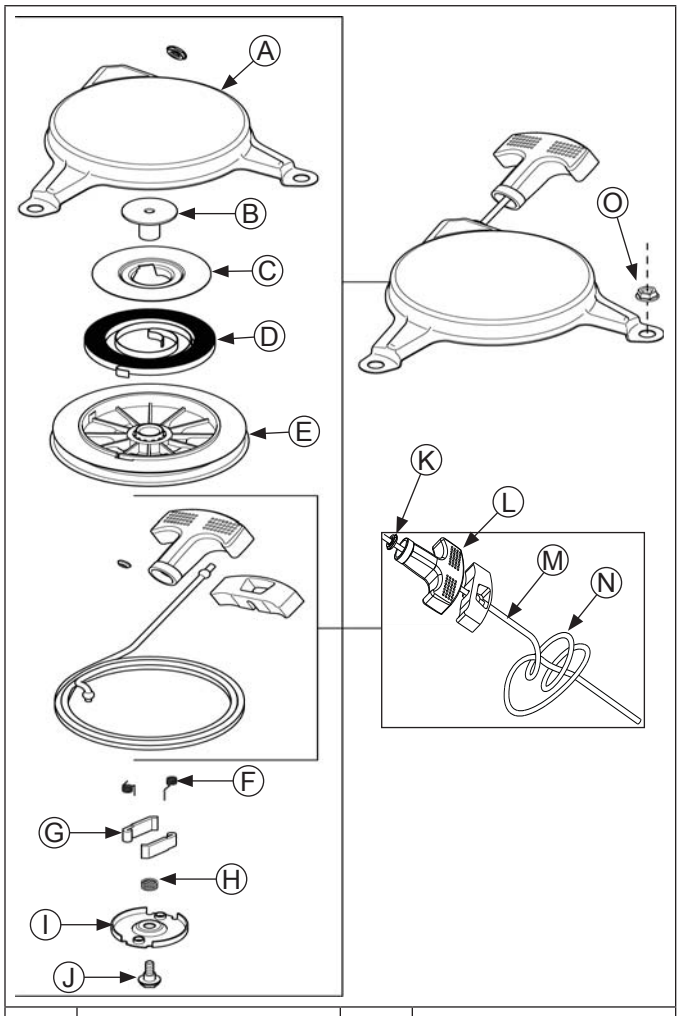

A	Housing	**B**	Recoil Bushing
C	Recoil Plate	**D**	Recoil Spring
E	Pulley	**F**	Drive Pawl Springs
G	Drive Pawl (Dogs)	**H**	Pulley Spring
I	Drive Plate	**J**	Center Screw
K	Grommet	**L**	Starter Handle
M	Starter Rope	**N**	Double Left-Hand Knot
O	Hex Flange Nut		

Remove Starter

NOTE: Whenever possible, an impact wrench should be used to loosen nuts securing retractable starter.

1. Remove nuts securing starter to blower housing.
2. Remove starter assembly.

Rope Replacement

NOTE: Do not allow pulley/spring to unwind. Enlist aid of a helper if necessary.

Rope can be replaced without complete starter disassembly.

1. Remove starter assembly from engine.
2. Pull rope out approximately 12 in. and tie a temporary (slip) knot in it to keep it from retracting into starter.
3. Pull knot end out of handle, untie knot, and slide handle off.
4. Hold pulley firmly and untie slipknot. Allow pulley to rotate slowly as spring tension is released.
5. When all spring tension on starter pulley is released, remove rope from pulley.
6. Tie a double left-hand knot in one end of new rope.
7. Rotate pulley counterclockwise to pre-tension spring (approximately 4 full turns of pulley).
8. Continue rotating pulley counterclockwise until rope hole in pulley is aligned with rope guide bushing of starter housing.
9. Insert unknotted end of new rope through rope hole in starter pulley and rope guide bushing of housing.
10. Tie a slipknot approximately 12 in. from free end of rope. Hold pulley firmly and allow it to rotate slowly until slipknot reaches guide bushing of housing.
11. Insert starter rope through starter handle and tie a double, left-hand knot at end of starter rope. Insert knot into hole in handle.
12. Untie slip knot and pull on starter handle until starter rope is fully extended. Slowly retract starter rope into starter assembly. If recoil spring is properly tensioned, starter rope will retract fully and starter handle will stop against starter housing.

Pawls (dogs) Replacement

1. Install a clamp to hold pulley in starter housing and prevent it from rotating.
2. Unscrew center screw and lift off drive plate.
3. Note positions of pawls and pawl springs before removing. Remove parts from pulley.
4. Install pawl springs and pawls into pawl slots of pulley. All parts must by dry.
5. Position drive plate over pawls, aligning actuating slots in place with raised sections on each drive pawl. Torque center screw to 5-6 N·m (44-54 in. lb.).
6. Remove clamp and pull starter rope out part way to check operation of pawls.

Install Starter

1. Place starter onto studs protruding from blower housing. Start nuts onto studs, but do not tighten.
2. Pull starter handle out until pawls engage in drive cup. Hold handle in this position and torque nuts to 8 N·m (71 in. lb.).

	WARNING Accidental Starts can cause severe injury or death. Disconnect and ground spark plug lead(s) before servicing.	Before working on engine or equipment, disable engine as follows: 1) Disconnect spark plug lead(s). 2) Disconnect negative (–) battery cable from battery.

External Engine Components

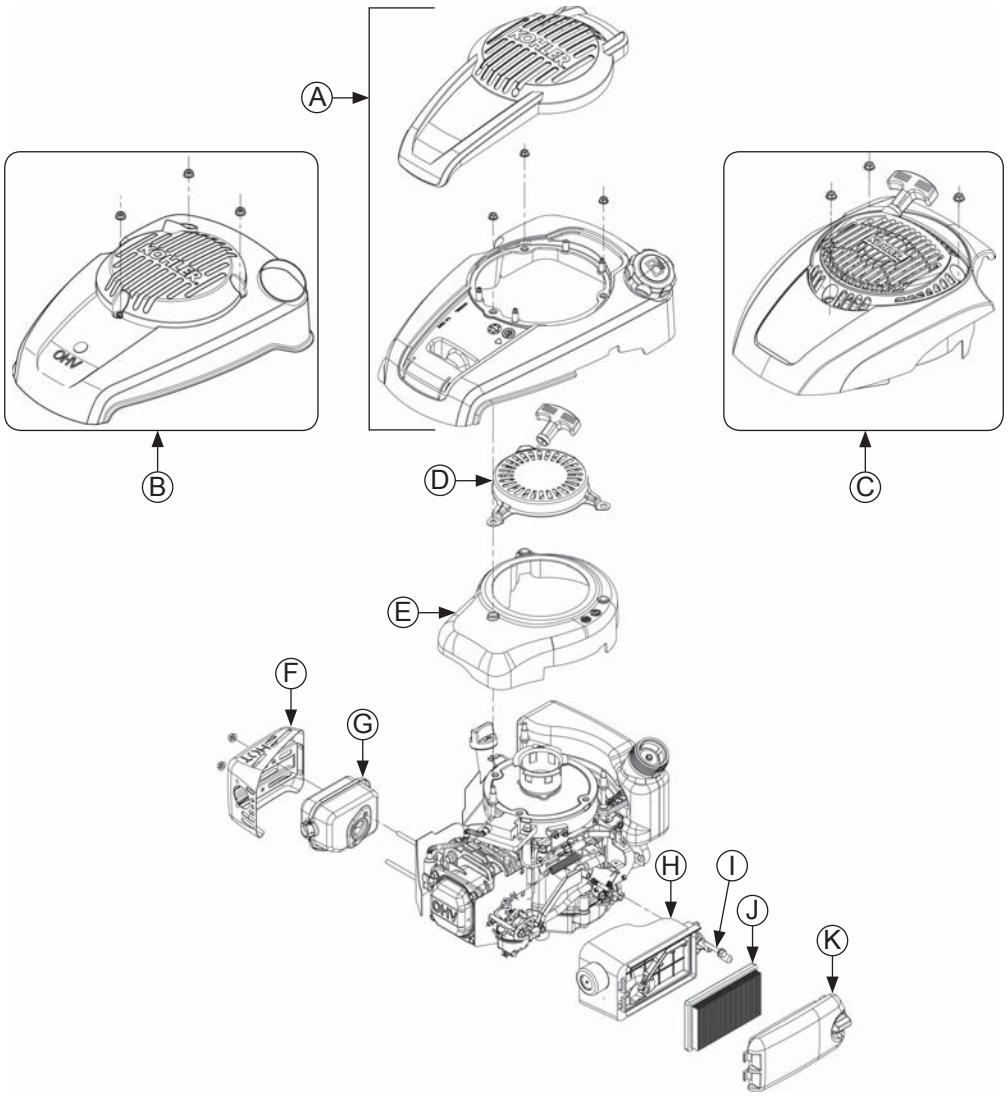

A	Engine Cover and Insert	**B**	Engine Cover	**C**	Engine Cover and Retractable Start	**D**	Retractable Starter
E	Blower Housing	**F**	Muffler Guard	**G**	Muffler	**H**	Air Cleaner Base
I	Breather Hose	**J**	Paper Element	**K**	Air Cleaner Cover		

Clean all parts thoroughly as engine is disassembled. Only clean parts can be accurately inspected and gauged for wear or damage. There are many commercially available cleaners that will quickly remove grease, oil, and grime from engine parts. When such a cleaner is used, follow manufacturer's instructions and safety precautions carefully.

Make sure all traces of cleaner are removed before engine is reassembled and placed into operation. Even small amounts of these cleaners can quickly break down lubricating properties of engine oil.

Disconnect Spark Plug

NOTE: Pull on boot only, to prevent damage to spark plug lead.

Disconnect lead from spark plug.

Empty Fuel Tank

1. Ensure fuel tank is empty by running engine until it stops, and is completely out of fuel.
2. Remove gas cap.

Drain Oil From Crankcase

Drain Oil from Dipstick Tube

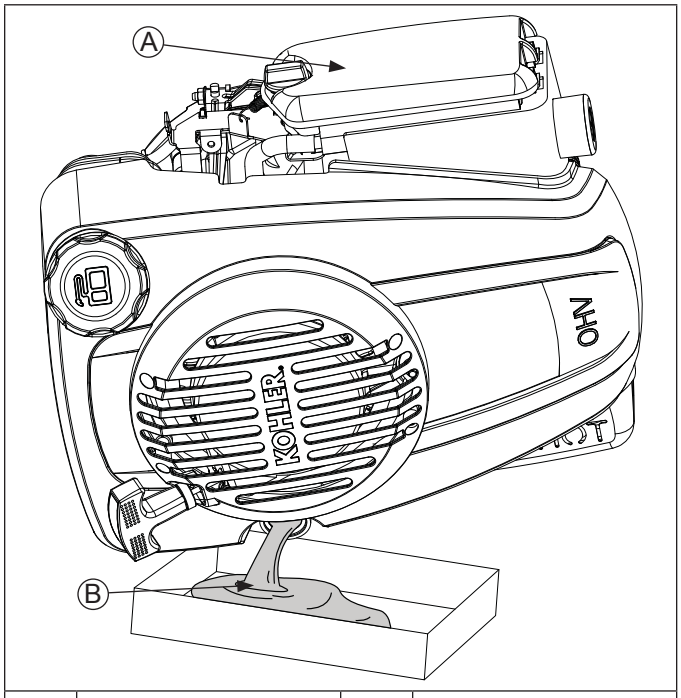

A	Air Cleaner	**B**	Oil

1. To keep dirt, grass clippings, and other debris out of engine, clean area around oil fill cap/dipstick.
2. Remove oil fill cap/dipstick.
3. Tilt engine on its side with air cleaner facing up. Drain oil into an approved container.
4. After crankcase is completely drained, tilt engine back to level.
5. Dispose of used oil in accordance with local ordinances.

Drain Oil From Crankcase Plug (if accessible)

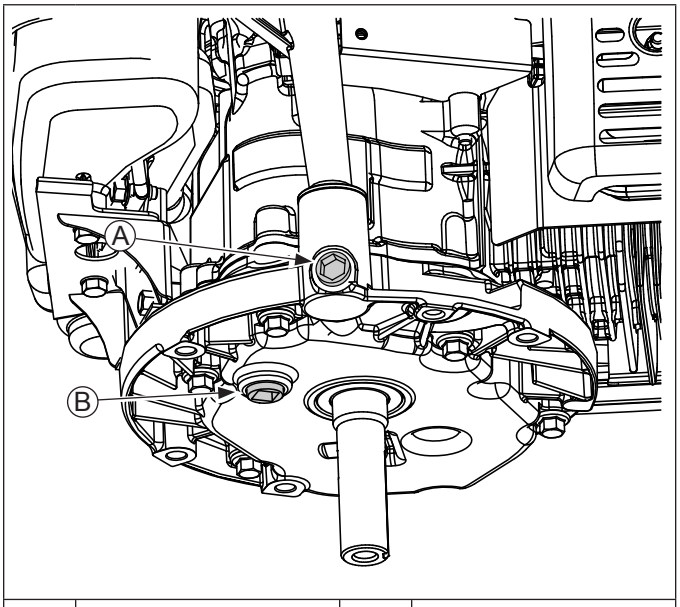

A	Crankcase Plug	**B**	Crankcase Plug (Bottom of Engine)

1. To keep dirt, grass clippings, and other debris out of engine, clean area around oil fill cap/dipstick, and then remove it.
2. Remove crankcase plug on bottom of engine.
3. Drain oil into an approved container.
4. Dispose of used oil in accordance with local ordinances.

Remove Engine Cover Insert (if equipped) and Cover

NOTE: Whenever possible, an impact wrench should be used to loosen nuts securing retractable starter.

1. Remove Torx screws securing engine cover insert.
2. Remove nuts securing engine cover. Remove engine cover.

Remove Engine Cover and Retractable Starter (if equipped)

NOTE: Whenever possible, an impact wrench should be used to loosen nuts securing retractable starter.

Remove nuts securing engine cover and retractable starter. Remove engine cover and retractable starter.

Remove Retractable Starter

Remove screws securing retractable starter assembly to engine.

Remove Blower Housing

Lift off blower housing and retain stud spacers.

Remove Muffler Assembly

1. Remove nuts securing muffler guard to cylinder head.
2. Slide muffler off studs.
3. Remove heat deflector gasket from exhaust studs, noting orientation.

Remove Air Cleaner Assembly

1. Loosen knob and remove air cleaner cover.
2. Remove paper element and foam precleaner (if equipped).
3. Remove nuts and screw securing air cleaner base to cylinder head and crankcase.
4. Detach breather hose from crankcase.
5. Remove air cleaner base and detach primer hose from carburetor (primer bulb equipped models only).
6. Remove air cleaner base gasket from carburetor, noting orientation.

Carburetor Components

Remove Carburetor with Primer or Carburetor with Choke (if equipped)

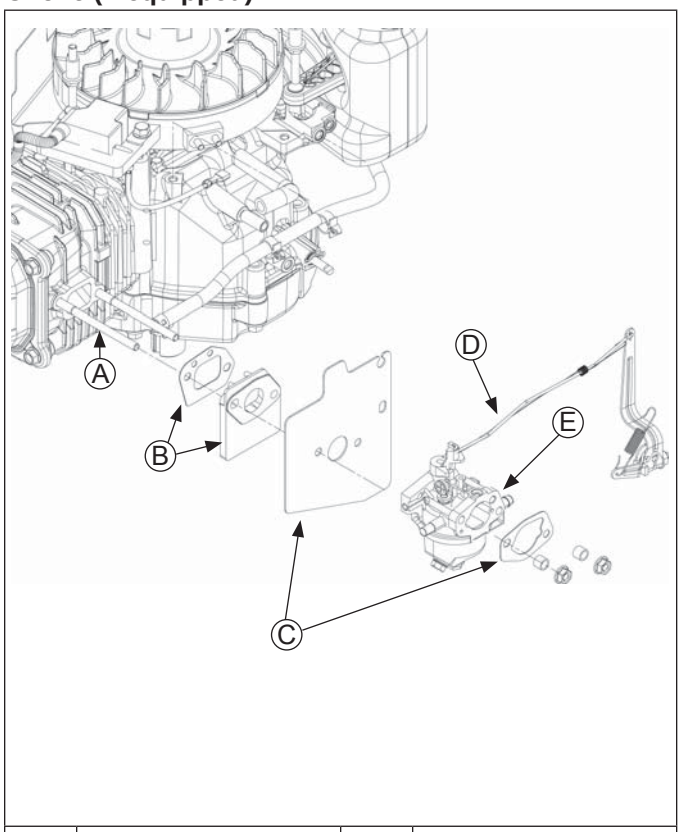

A	Carburetor Stud(s)	**B**	Gasket and Spacer Kit
C	Gasket and Heat Shield Kit	**D**	Linkage
E	Carburetor		

NOTE: Ensure fuel tank is empty by running engine until it stops, and is completely out of fuel.

1. Squeeze hose clamp and slide it and fuel line off carburetor.
2. Slide carburetor to end of intake studs.
3. Turn throttle lever clockwise until it stops. Gently push rod and spring linkages up to disconnect them from throttle lever.
4. Rotate carburetor until choke linkage can be disconnected from carburetor. If equipped.
5. Slide off carburetor heat shield, spacer, and gasket, noting sequence.

Remove Carburetor with Auto Choke (if equipped)

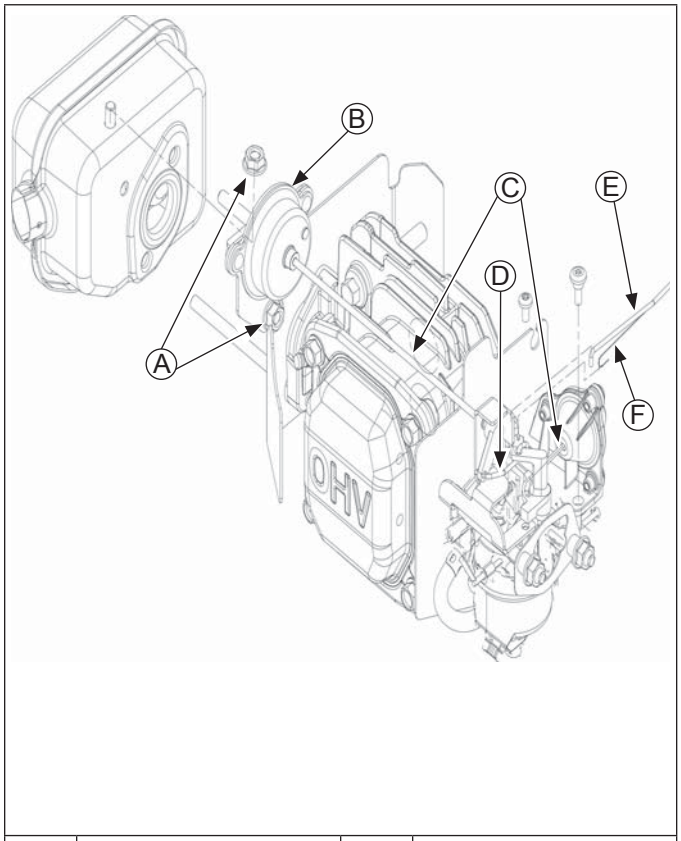

A	Nut(s)	**B**	Arm Assembly
C	Linkage	**D**	Choke Linkage
E	Governor Linkage	**F**	Linkage Spring

1. Remove screws securing arm assembly to carburetor.
2. Disconnect fuel line.
3. Carefully pull carburetor away from engine several inches.
4. Disconnect governor linkage and linkage spring from carburetor.
5. Remove choke linkage from arm assembly.
6. Remove carburetor.
7. Remove nuts securing arm assembly to muffler. Second nut is located behind arm assembly base securing it to top of muffler.
8. Remove arm assembly from muffler.

Control Components

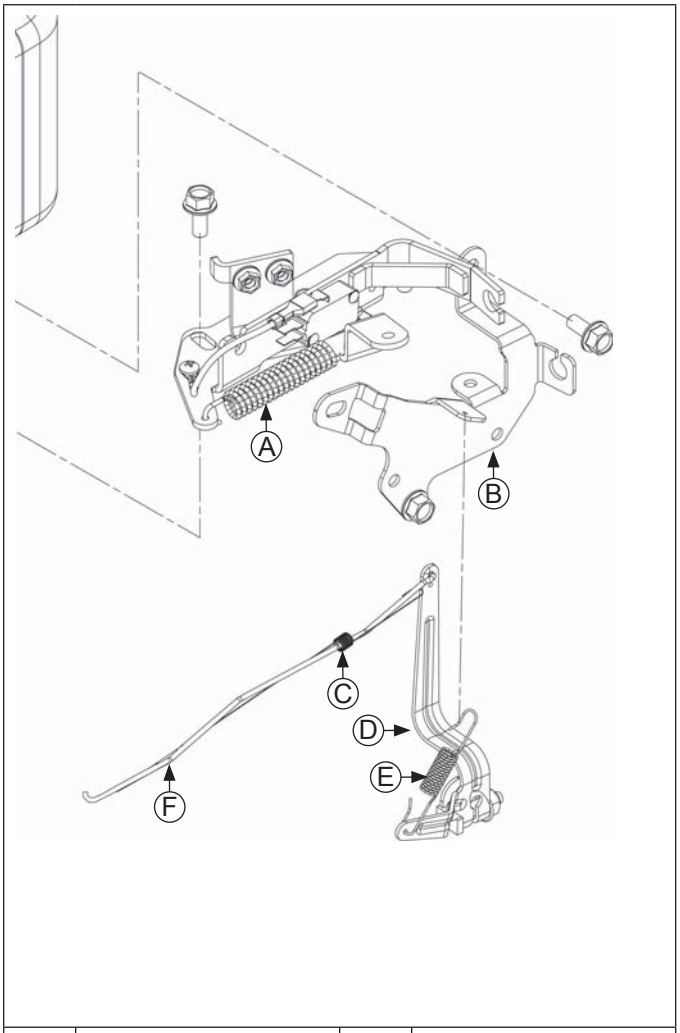

A	Flywheel Brake Spring	**B**	Speed Control Bracket
C	Linkage Spring	**D**	Governor Lever
E	Governor Spring	**F**	Throttle Linkage

Remove Speed Control Bracket

Disconnect governor spring from speed control bracket.

Remove Speed Control Bracket

NOTE: Fuel hose connecting carburetor and fuel tank is held in place by a plastic ring, mounted on back of speed control bracket. If bracket is removed from crankcase, it will remain attached to fuel hose (not including California engines). Should replacement of speed bracket be required, disconnect fuel line from fuel filter or carburetor and slide bracket off hose. Do not disconnect fuel hose from fuel tank.

Remove screws securing speed control bracket.

Remove Governor Lever

Loosen governor lever nut and slide lever off governor shaft.

Flywheel/Ignition/Fuel Tank Components

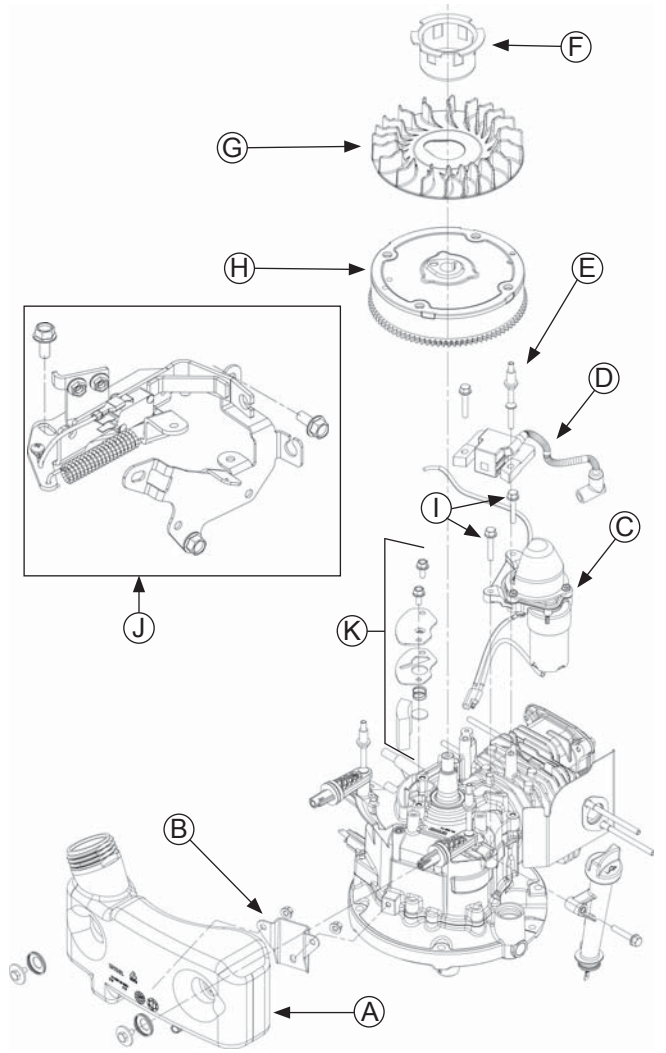

A	Fuel Tank	**B**	Crankcase Bracket
C	Electric Starter	**D**	Ignition Module
E	Stud(s)	**F**	Drive Cup
G	Fan	**H**	Flywheel
I	Screw(s)	**J**	Flywheel Brake Assembly
K	Breather Assembly		

Remove Fuel Tank

1. Ensure fuel tank is empty.
2. Detach fuel tank from crankcase bracket by removing nut.
3. Remove studs securing top of fuel tank and lift off tank.

Remove Ignition Module

1. Disconnect kill lead from ignition module.
2. Remove screw and stud securing ignition module. Mark stud for identification during reassembly.

Disconnect Flywheel Brake Spring

Grasp 1 end of flywheel brake spring with a pliers and stretch it to disconnect it.

Remove Flywheel

1. Using a flywheel strap wrench to hold flywheel, remove nut inside drive cup.
2. Remove drive cup and lift off fan, noting orientation on flywheel for reassembly.
3. Flywheel is mounted on a tapered shaft. To break it loose, use a rubber mallet to land a firm blow toward outer rim of flywheel. Remove flywheel.
4. Remove flywheel key from crankshaft.

Inspection
Inspect flywheel for cracks and check keyway for wear or damage. Replace flywheel if cracked. If flywheel key is sheared or keyway is damaged, replace crankshaft, flywheel, and key.

Inspect ring gear for cracks or damage. Ring gears are not available separately. Replace flywheel if ring gear is damaged.

Remove Electric Starter (if equipped)

Remove screws securing electric starter to engine.

Remove Breather Assembly

Breather system is designed to control amount of oil in head area and still maintain necessary vacuum in crankcase.

When pistons move downward, crankcase gases are pushed past reed through mesh filter into intake system. Upward travel of pistons closes reed and creates a low vacuum in lower crankcase. Any oil separated out through filter drains back into crankcase.

1. Remove screws securing breather cover. Remove cover.
2. Remove breather spring, disc and screen.

Remove Spark Plug

Remove spark plug from cylinder head.

Remove Flywheel Brake Assembly

Remove screws securing flywheel brake assembly; retain spacers (if equipped).

Cylinder Head Components

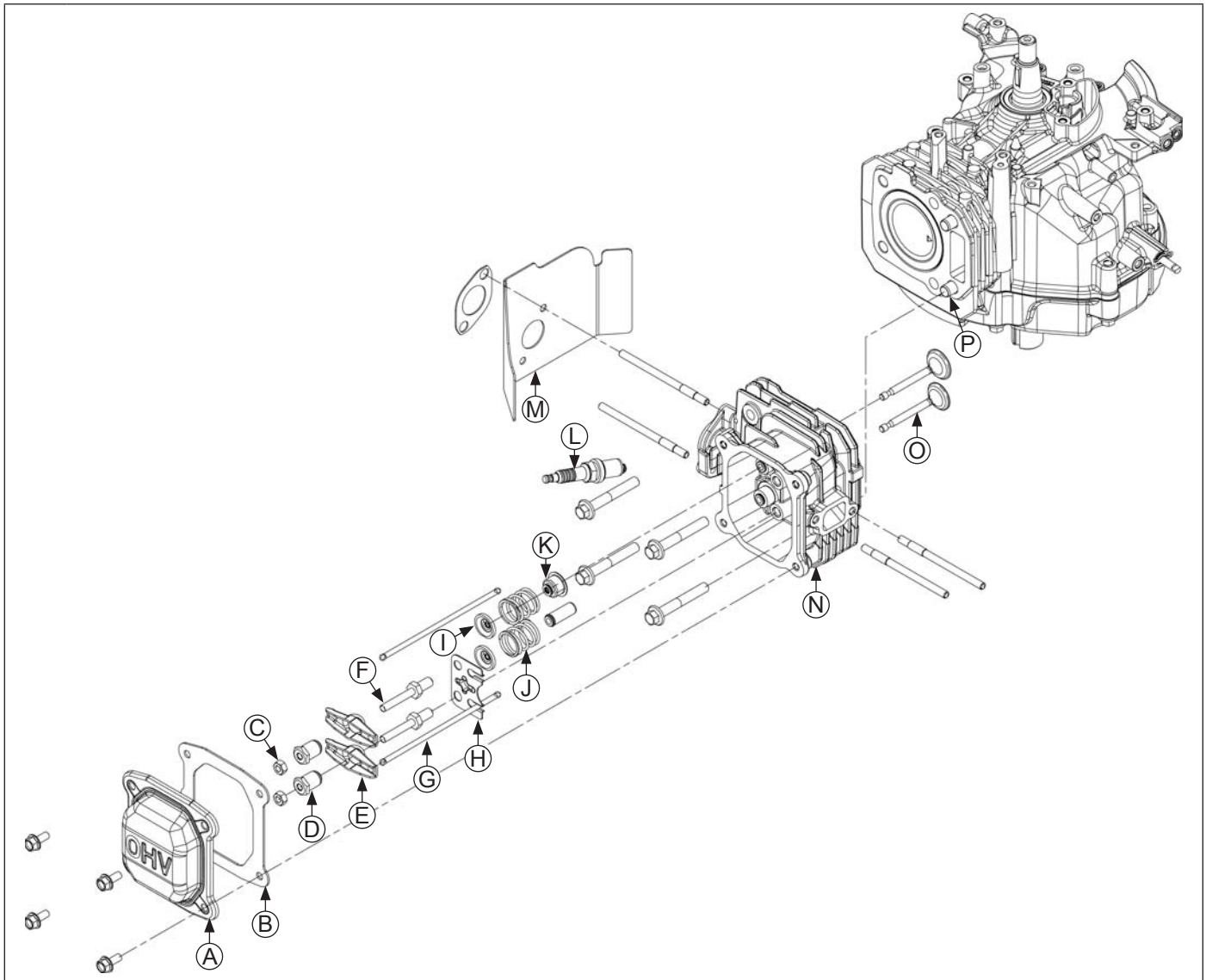

A	Valve Cover	**B**	Gasket	**C**	Jam Nut	**D**	Rocker Arm Pivot
E	Rocker Arms	**F**	Rocker Arm Stud	**G**	Push Rod	**H**	Push Rod Guide Plate
I	Valve Keeper	**J**	Valve Spring	**K**	Intake Valve Seal	**L**	Spark Plug
M	Baffle	**N**	Cylinder Head	**O**	Valve	**P**	Dowel Pin

Remove Valve Cover

1. Remove screws from valve cover.
2. Remove cover and gasket.

Remove Jam Nuts and Rocker Arm Pivots

Use a socket and wrench to remove jam nuts and rocker arm pivots from rocker studs.

Remove Rocker Arms

Noting orientation, lift rocker arms off rocker studs.

Remove Push Rods

Remove push rods and mark them for reinstallation.

Remove Rocker Studs

Unscrew and remove rocker studs from cylinder head.

Remove Guide Plate

1. Remove guide plate from rocker studs.
2. Note orientation of guide plate (tabs down) for use during reassembly.

Remove Cylinder Head

1. Remove screws securing cylinder head.
2. Remove cylinder head, noting positioning of dowels.
3. Remove head gasket and discard.

Valve Inspection and Service

Carefully inspect valve mechanism parts. Inspect valve springs and related hardware for excessive wear or distortion. Check valves and valve seats for evidence of deep pitting, cracks, or distortion. Following diagram outlines valve running clearances between valve stems and guides.

Valve Details

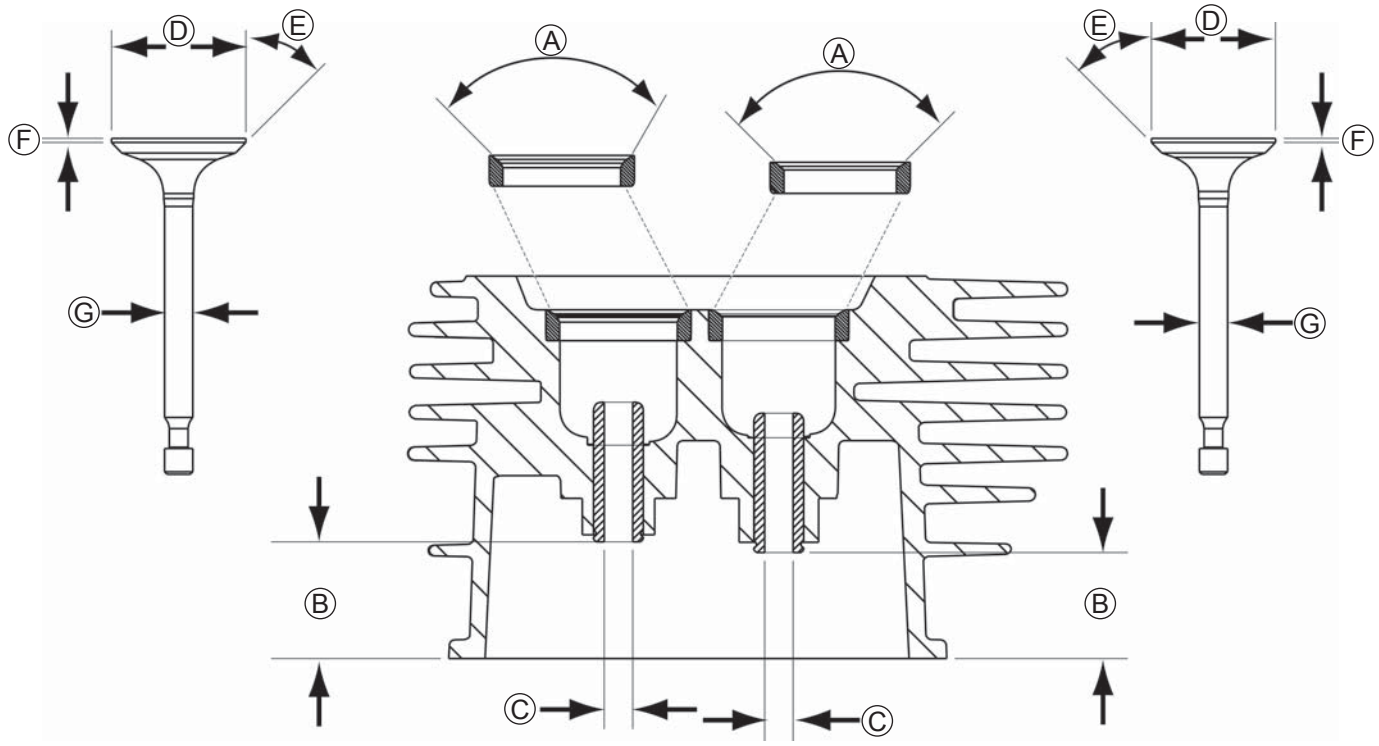

	Dimension	Intake	Exhaust
A	Seat Angle	90°	90°
B	Guide Depth	22.6 mm	20.5 mm
C	Guide I.D.	5.500/5.512 mm	5.500/5.512 mm
D	Valve Head Diameter	25.875/26.125 mm	23.875/24.125 mm
E	Valve Face Angle	45°	45°
F	Valve Margin (Min.)	0.80 mm	0.80 mm
G	Valve Stem Diameter	5.465/5.480 mm	5.465/5.480 mm

Remove Valve Assembly

NOTE: Only intake valve has a seal. There is no valve seal on exhaust side.

1. Push down on valve spring keepers to release valve springs from valve stems.
2. Remove valve spring keepers and springs.
3. Push end of intake valve to release valve seal.
4. Remove both valves from opposite side of head.

Inspection and Service

Hard starting, or loss of power accompanied by high fuel consumption, may be symptoms of faulty valves.

Although these symptoms could also be attributed to worn rings, remove and check valves first. After removal, clean valve heads, faces, and stems with a power wire brush. Then, carefully inspect each valve for defects such as warped head, excessive corrosion, or worn stem end. Replace valves found to be in bad condition.

Valve Guides
To check valve guide-to-valve stem clearance, thoroughly clean valve guide and, using a split-ball gauge, measure inside diameter. Then, using an outside micrometer, measure diameter of valve stem at several points on stem where it moves in valve guide. Use largest stem diameter to calculate clearance. If intake clearance exceeds 0.047 mm (.0018 in.) or exhaust clearance exceeds 0.082 mm (.0032 in.), determine whether valve stem or guide is responsible for excessive clearance.

Maximum (I.D.) wear on intake valve guide is 5.512 mm (0.2170 in.), while 5.512 mm (0.2170 in.) is maximum allowed on exhaust guide. Guides are not removable. If guides are within limits but valve stems are worn beyond limits, replace valves.

Valve Seat Inserts
Hardened steel alloy intake and exhaust valve seat inserts are press fitted into cylinder head. Inserts are not replaceable, but they can be reconditioned if not too badly pitted or distorted. If seats are cracked or badly warped, cylinder head should be replaced.

Recondition valve seat inserts following instructions provided with valve seat cutter (A) being used. Final cut should be made with an 90° cutter as specified for valve seat angle. With proper 45° valve face angle, and valve seat cut properly (44.5° as measured from center line when cut 90°) this would result in desired 0.5° (1.0° full cut) interference angle where maximum pressure occurs on valve face and seat.

Lapping Valves
Reground or new valves must be lapped in, to provide a good seal. Use a hand valve grinder with suction cup for final lapping. Lightly coat valve face with fine grade of grinding compound, then rotate valve on seat with grinder. Continue grinding until smooth surface is obtained on seat and on valve face. Thoroughly clean cylinder head in soap and hot water to remove all traces of grinding compound. After drying cylinder head, apply a light coating of engine oil to prevent rusting.

Crankcase Components

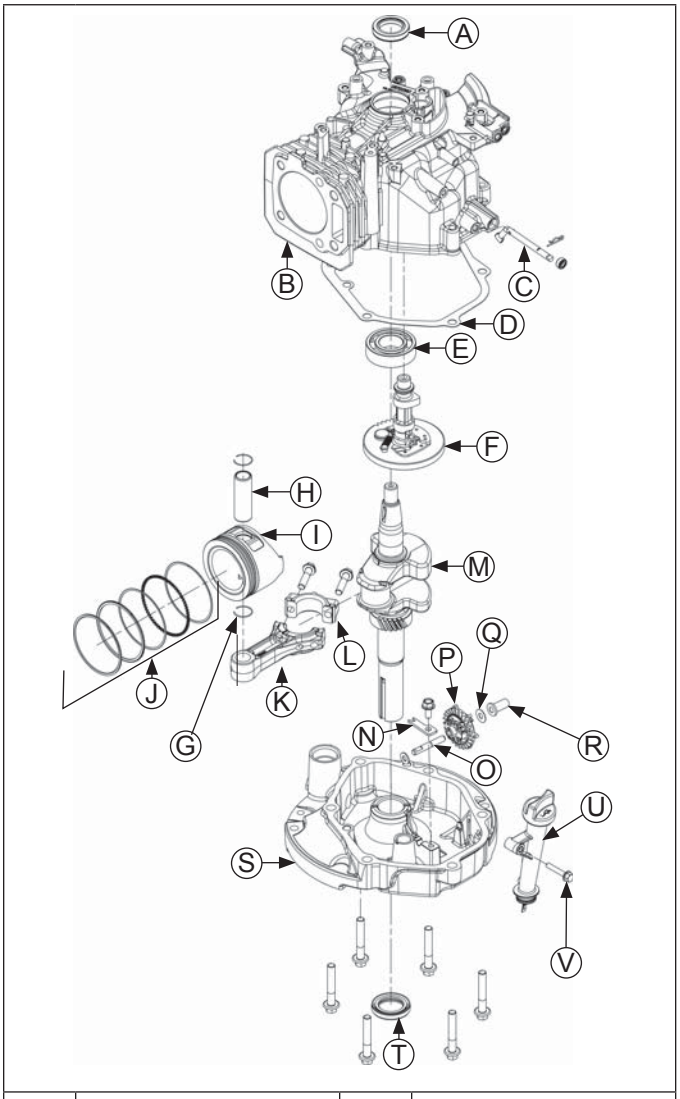

A	Crankcase Oil Seal	**B**	Crankcase
C	Governor Cross Shaft	**D**	Gasket
E	Crankcase Bearing	**F**	Camshaft
G	Piston Pin Retainer	**H**	Piston Pin
I	Piston	**J**	Piston Ring Set
K	Connecting Rod	**L**	Connecting Rod End Cap
M	Crankshaft	**N**	Retainer
O	Governor Shaft	**P**	Governor Gear
Q	Governor Washer	**R**	Governor Cup
S	Oil Pan	**T**	Oil Pan Oil Seal
U	Dipstick Tube	**V**	Screw

Remove Dipstick Tube

Remove screw securing dipstick tube. Remove tube.

Remove Oil Pan and Gasket

1. Remove screws securing oil pan.
2. Using a flat blade screwdriver as a wedge, carefully separate oil pan from crankcase.
3. Remove old gasket and discard.

Inspection
Inspect oil seal in oil pan and remove it if it is worn or damaged.

Remove Camshaft

Remove camshaft from crankcase.

Inspection and Service
Inspect gear teeth of camshaft. If teeth are badly worn or chipped, or if some are missing, replacement of camshaft will be necessary. If unusual wear or damage is evident on either camshaft lobes or mating tappets camshaft and both tappets must be replaced. Check condition and operation of Automatic Compression Release (ACR) mechanism.

ACR
These engines are equipped with an ACR mechanism. ACR lowers compression at cranking speeds to make starting easier.

ACR mechanism consists of a decompression weight and arm mounted to camshaft, and activated by a return spring. When engine is rotating at low cranking speeds (1000 RPM or less), decompression weight holds arm so it protrudes above heel of exhaust lobe. This holds exhaust valve off its seat during first part of compression stroke.

After engine speed increases above approximately 1000 RPM, centrifugal force causes decompression weight to move outward, causing arm to retract. When in this position, arm has no effect on exhaust valve and engine operates at FULL compression and power.

Benefits
As a result of reduced compression at cranking speeds, several important benefits are obtained:

1. Manual (retractable) starting is much easier. Without ACR, manual starting would be virtually impossible.
2. Electric start models can use a smaller starter and battery which are more practical for application.
3. ACR eliminates need for a spark retard/advance mechanism. A spark retard/advance mechanism would be required on engines without ACR to prevent kickback which would occur during starting. ACR eliminates this kickback, making manual starting safer.
4. Choke control setting is less critical with ACR. If flooding occurs, excess fuel is blown out opened exhaust valve and does not hamper starting.
5. Engines with ACR start much faster in cold weather than engines without ACR.
6. Engines with ACR can be started with spark plugs which are worn or fouled. Engines without ACR are more difficult to start with those same spark plugs.

Remove Governor Gear and Shaft

1. Remove screw and retainer securing governor gear.
2. Remove hitch pin securing governor shaft. Remove shaft.

Inspection
Inspect governor gear teeth. Replace gear if it is worn, chipped, or if any teeth are missing. Inspect governor weights. They should move freely in governor gear.

Remove Tappets

Remove tappets. Mark them INTAKE and EXHAUST for reinstallation.

Remove Connecting Rod Cap

Rotate crankshaft to allow access to 2 screws on connecting rod cap. Remove screws and cap.

Remove Piston and Connecting Rod

Carefully guide piston and attached connecting rod out of cylinder bore.

Connecting Rod Inspection and Service
Check bearing area (big end) for excessive wear, score marks, running and side clearances. Replace connecting rod and end cap if scored or excessively worn.

Service replacement connecting rods are available in STD size.

Piston and Rings Inspection
Scuffing and scoring of pistons and cylinder walls occurs when internal engine temperatures approach welding point of piston. Temperatures high enough to do this are created by friction, which is usually attributed to improper lubrication and/or overheating of engine.

Normally, very little wear takes place in piston boss or piston pin area. If original piston and connecting rod can be reused after new rings are installed, original pin can also be reused but new piston pin retainers are required. Piston pin is included as part of piston assembly – if pin boss in piston or pin itself is worn or damaged, a new piston assembly is required.

Ring failure is usually indicated by excessive oil consumption and blue exhaust smoke. When rings fail, oil is allowed to enter combustion chamber where it is burned along with fuel. High oil consumption can also occur when piston ring end gap is incorrect, because ring cannot properly conform to cylinder wall under this condition. Oil control is also lost when ring gaps are not staggered during installation.

When cylinder temperatures get too high, lacquer and varnish collect on pistons, causing rings to stick, which results in rapid wear. A worn ring usually takes on a shiny or bright appearance.

Scratches on rings and pistons are caused by abrasive material such as carbon, dirt, or pieces of hard metal.

Detonation damage occurs when a portion of fuel charge ignites spontaneously from heat and pressure shortly after ignition. This creates two flame fronts, which meet and explode to create extreme hammering pressures on a specific area of piston. Detonation generally occurs from using low octane fuels.

Preignition or ignition of fuel charge before timed spark

can cause damage similar to detonation. Preignition damage is often more severe than detonation damage. Preignition is caused by a hot spot in combustion chamber such as glowing carbon deposits, blocked cooling fins, an improperly seated valve, or a wrong spark plug.

Replacement pistons are available in STD bore size. Replacement pistons include new piston ring sets and new piston pins.

Replacement ring sets are also available separately for STD pistons. Always use new piston rings when installing pistons. Never use old rings.

Some important points to remember when servicing piston rings:

1. Cylinder bore must be de-glazed before service ring sets are used.
2. If cylinder bore does not need re-boring and if old piston is within wear limits and free of score or scuff marks, old piston may be reused.
3. Remove old rings and clean up grooves. Never reuse old rings.
4. Before installing new rings on piston, place top 2 rings, each in turn, in its running area in cylinder bore and check end gap. Compare ring gap to Clearance Specifications.
5. After installing new compression (top and middle) rings on piston, check piston-to-ring side clearance. Compare clearance to Clearance Specifications. If side clearance is greater than specified, a new piston must be used.

Install New Piston Rings

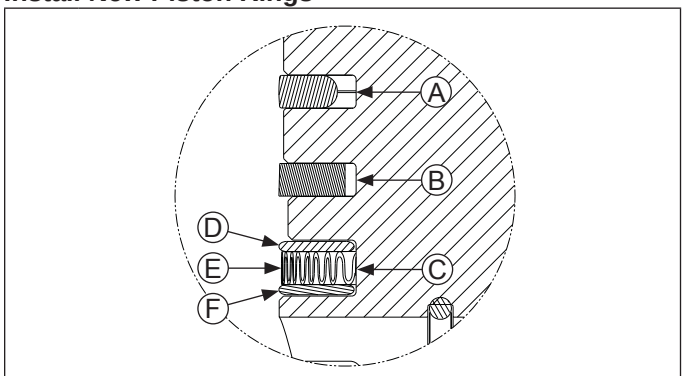

A	Top Compression Ring	**B**	Middle Compression Ring
C	Oil Control Ring	**D**	Top Rail
E	Expander Ring	**F**	Bottom Rail

Piston Ring Orientation

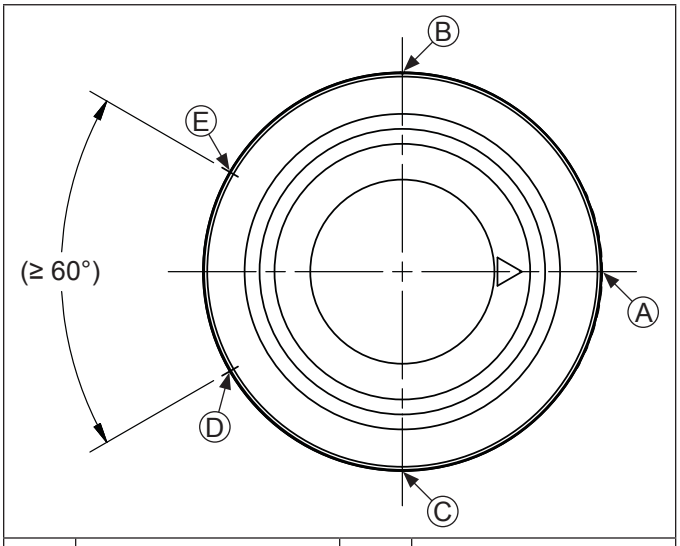

A	Oil Ring Expander Gap	**B**	Bottom Oil Rail Gap
C	Top Oil Rail Gap	**D**	Intermediate Compression Ring Gap
E	Top Compression Ring Gap		

NOTE: Rings must be installed correctly. Install oil control ring assembly (bottom groove) first, middle compression ring (center groove) second, and top compression ring (top groove) last. Oil control ring assembly is a three-piece design, and consists of a top rail, expander ring, and bottom rail.

Use a piston ring expander to install rings.

1. Oil control ring assembly (bottom groove): Install expander first then bottom rail and top rail last. Make sure ends of expander are not overlapped. Adjust ring gaps.
2. Middle compression ring (center groove): Install middle compression ring using a piston ring expander tool. Make sure identification mark is up or colored dye stripe (if contained) is left of end gap. Adjust ring gaps.
3. Top compression ring (top groove): Install top compression ring using a piston ring expander tool. Make sure identification mark is up or colored dye stripe (if contained) is left of end gap. Adjust ring gaps.

Remove Crankshaft

Remove crankshaft.

Inspection and Service
Inspect gear teeth of crankshaft and ACR gear. If any teeth are badly worn or chipped, or if some are missing, replacement of crankshaft will be necessary.

Inspect crankshaft bearing surfaces for scoring, grooving, etc. Measure running clearance between crankshaft journals and their respective bearing bores. Use an inside micrometer or telescoping gauge to measure inside diameter of both bearing bores in vertical and horizontal planes. Use an outside micrometer to measure outside diameter of crankshaft main bearing journals. Subtract journal diameters from their respective bore diameters to get running clearances. Check results against values in Specifications and Tolerances. If running clearances are within specification, and there is no evidence of scoring, grooving, etc., no further reconditioning is necessary. If bearing surfaces are worn or damaged, crankcase and/or closure plate will need to be replaced.

Inspect crankshaft keyway. If worn or chipped, replacement of crankshaft will be necessary.

Inspect crankpin for score marks or metallic pickup. Slight score marks can be cleaned with crocus cloth soaked in oil. If wear limits in Specifications are exceeded, it will be necessary to replace crankshaft.

Crankcase

Inspection and Service
Check all gasket surfaces to make sure they are free of gasket fragments and deep scratches or nicks.

Check cylinder wall for scoring. In severe cases, unburned fuel can dissolve lubricating oil off piston and cylinder wall. Without lubrication, piston rings would make metal to metal contact with wall, causing scuffing and scoring. Scoring of cylinder wall can also be caused by localized hot spots from blocked cooling fins or from inadequate or contaminated lubrication.

Crankcase Components

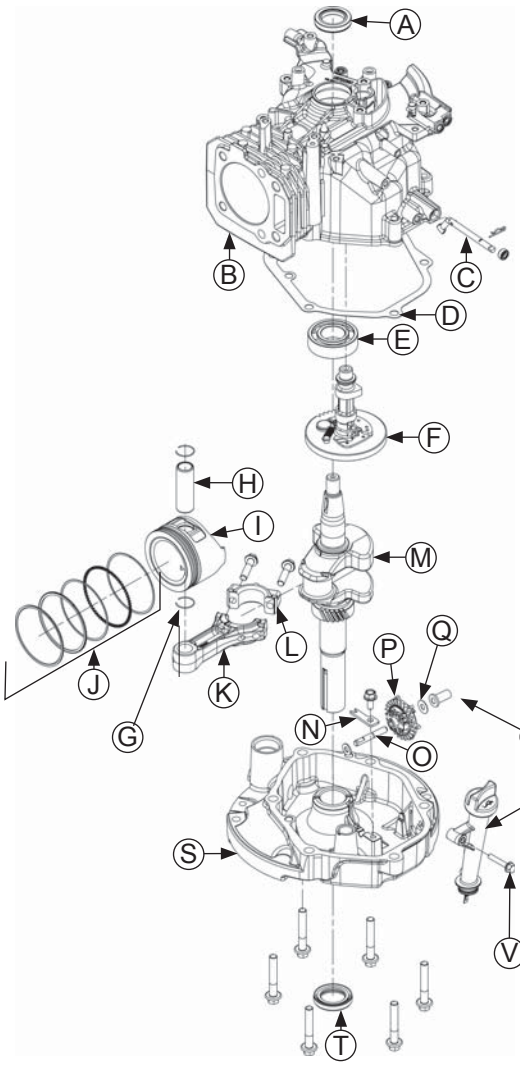

A	Crankcase Oil Seal	**B**	Crankcase
C	Governor Cross Shaft	**D**	Gasket
E	Crankcase Bearing	**F**	Camshaft
G	Piston Pin Retainer	**H**	Piston Pin
I	Piston	**J**	Piston Ring Set
K	Connecting Rod	**L**	Connecting Rod End Cap
M	Crankshaft	**N**	Retainer
O	Governor Shaft	**P**	Governor Gear
Q	Governor Washer	**R**	Governor Cup
S	Oil Pan	**T**	Oil Pan Oil Seal
U	Dipstick Tube	**V**	Screw

NOTE: Make sure engine is assembled using all specified torque values, tightening sequences, and clearances. Failure to observe specifications could cause severe engine wear or damage.

NOTE: Always use new gaskets.

NOTE: Make sure all components have been properly cleaned BEFORE reassembly.

NOTE: Remove all traces of cleaners before engine is reassembled and placed into operation. Even small amounts of these cleaners can quickly break down lubricating properties of engine oil.

Install Crankshaft

Carefully install crankshaft into crankcase through front seal, and fully seat into place. Rotate crankshaft until journal for connecting rod is away from cylinder.

Install Piston and Connecting Rod

NOTE: Proper orientation of piston and connecting rod inside engine is extremely important. Improper orientation can cause extensive wear or damage.

1. Stagger piston rings in grooves until end gaps are 60° or more apart. Lubricate cylinder bore, crankshaft journal, connecting rod journal, piston, and rings with engine oil.
2. Compress piston rings using a piston ring compressor.
3. Position triangle on top of piston toward push rod chamber.
4. Carefully guide connecting rod, with piston attached, into bore.
5. Use handle of a soft, rubber-grip hammer to tap piston into bore.
6. Rotate crankshaft to mate with connecting rod. Align rod cap and connecting rod to match marks. Torque screws to 12.5 N·m (110 in. lb.).

Install Tappets

Install intake and exhaust tappets into their respective positions, as previously marked.

Install Camshaft

1. Lubricate camshaft and cam gear surfaces with light grease or oil.
2. Install camshaft and align timing marks.

Install Governor Gear Assembly

NOTE: When installing governor, flat of governor shaft (located on outside of crankcase) should be turned so flat is parallel to crankcase gasket surface. Paddle of governor shaft (located inside crankcase) should be pointing away from crankcase gasket surface.

1. Install governor gear and retainer, and torque screw to 9.5 N·m (84 in. lb.).
2. Install governor cross shaft and secure it with hitch pin.

Install Oil Pan

Torque Sequence

XT-7, XTR-7

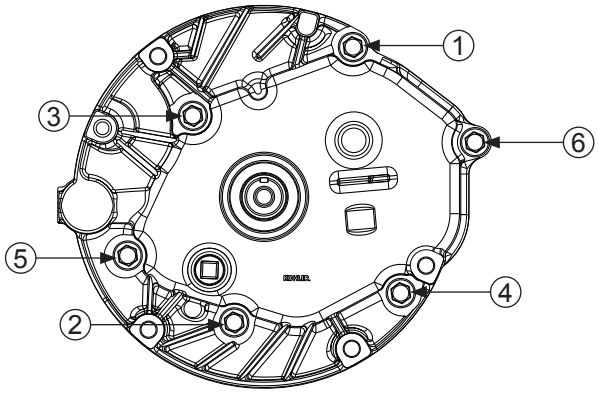

XT-6, XTR-6

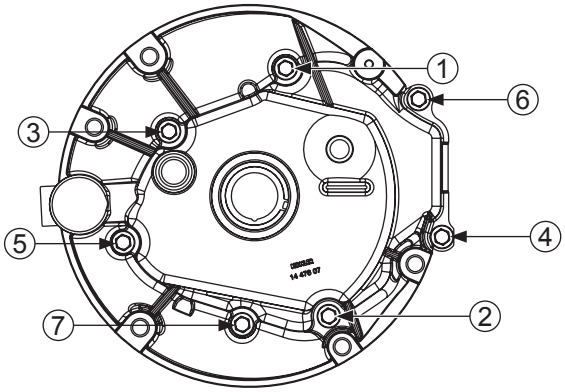

NOTE: When installing oil pan, ensure plunger on governor gear is pressed fully into governor. Incorrectly installing governor plunger may result in damage.

1. Sealing surfaces of crankcase and oil pan should be clean, dry and free of any nicks or burrs.
2. Install 2 crankcase dowels into crankcase.
3. Using crankcase dowels as a guide, install a new oil pan gasket onto crankcase.
4. Guide oil pan onto crankcase, ensuring camshaft and governor gear align with their mating surfaces. Rotate crankshaft slightly to help engage governor gear.
5. Install and finger tighten screws, securing oil pan to crankcase.
6. Use torque sequence shown and torque oil pan screws to:

Model	Torque
XT6	11.0 N·m (98 in. lb.)
XTR-6	
XT-7	14.7 N·m (130 in. lb.)
XTR-7	

Cylinder Head Components

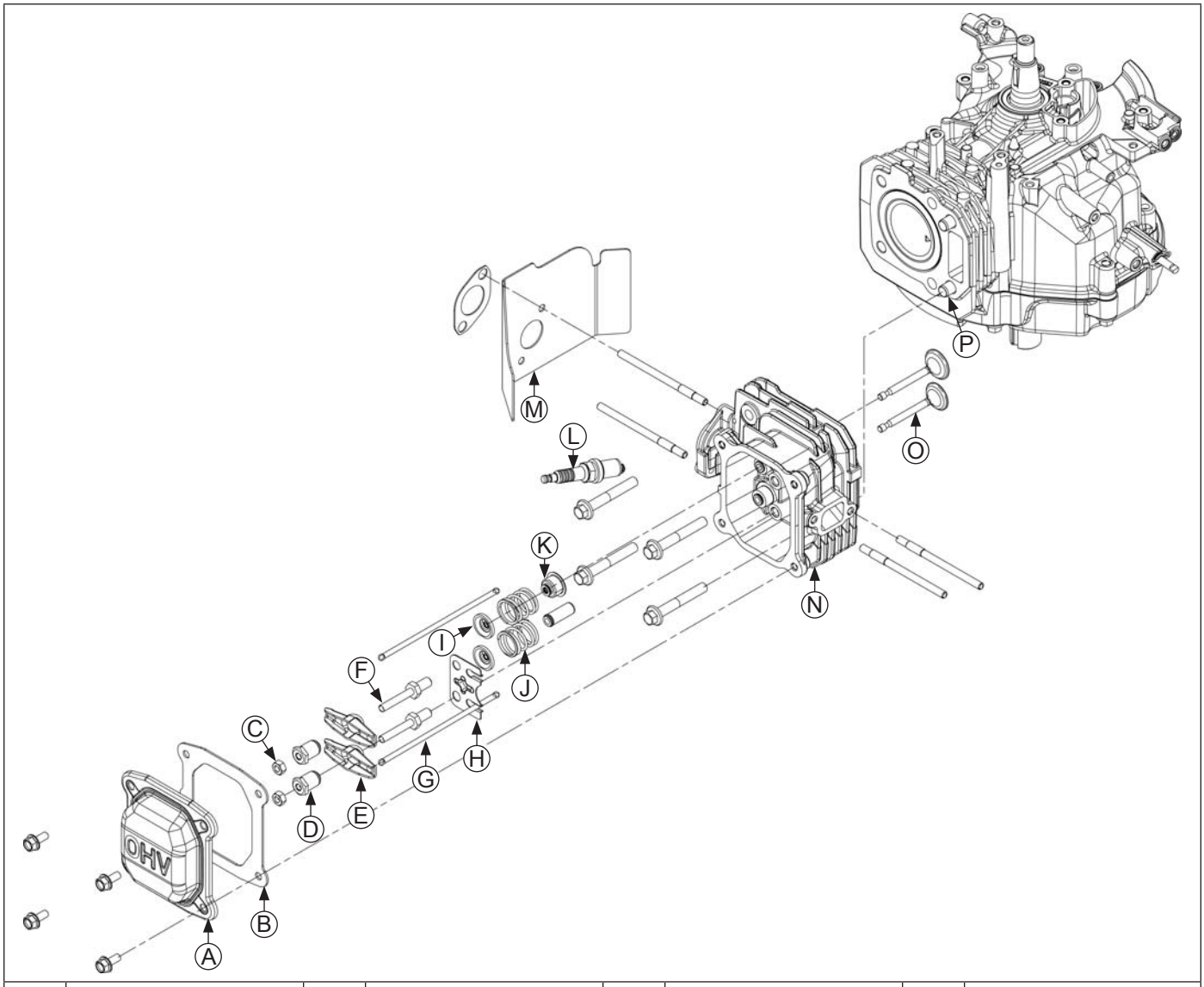

A	Valve Cover	**B**	Gasket	**C**	Jam Nuts	**D**	Rocker Arm Pivot
E	Rocker Arms	**F**	Rocker Arm Stud	**G**	Push Rods	**H**	Push Rod Guide Plate
I	Valve Keeper	**J**	Valve Spring	**K**	Intake Valve Seal	**L**	Spark Plug
M	Baffle	**N**	Cylinder Head	**O**	Valve	**P**	Dowel Pin

Install Cylinder Head Assembly

Prior to assembly, lubricate all components with engine oil, including tips of valve stems and valve guides.

Install Valve Train

1. Install intake and exhaust valves into their respective positions in cylinder head.
2. Install intake valve seal onto intake valve. Next, slide valve springs onto both valves and lock them in place with valve spring keepers.

Install Cylinder Head

Torque Sequence

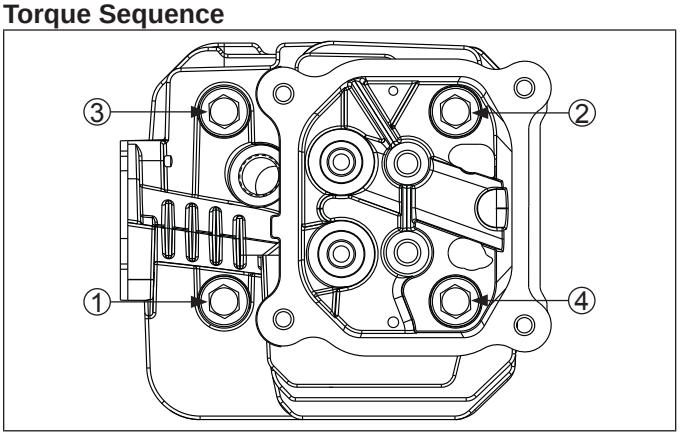

NOTE: Do not reuse cylinder head gasket. Always replace with new gasket.

1. Examine sealing surfaces of cylinder head and crankcase for nicks or burrs.
2. Using cylinder head dowels as a guide, install a new head gasket.
3. Match sides of head together and finger tighten screws.
4. Torque screws in two stages; first to 14 N·m (123 in. lb.), finally to 27.8 N·m (246 in. lb.), following sequence shown.

Install Push Rod Assembly

Torque Sequence

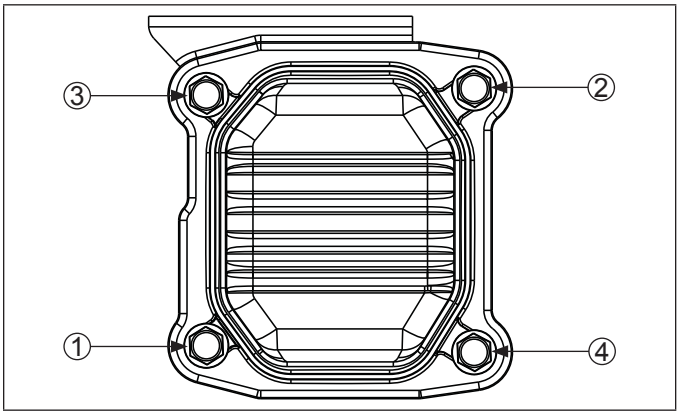

NOTE: Installation and seating of push rods into tappet recesses during this sequence is critical. To aid with proper installation of push rods and rocker arms, and for adjusting valve lash, position engine with cylinder head up. When properly installed, push rods extend approximately 1 in. (25.4 mm) above guide plate.

1. With tabs on guide plate facing down, install rocker studs.
2. Tighten rocker studs to 13.6 N·m (120 in. lb.).
3. Install push rods into intake and exhaust positions, as previously marked.
4. Apply grease to contact surfaces of rocker arms and pivots.
5. Install rocker arms onto rocker studs. Match rocker arm dimples with round push rod ends.
6. Loosely install pivots and jam nuts onto rocker studs.
7. With piston at top dead center of compression stroke, insert a 0.1 mm (0.004 in.) flat feeler gauge between 1 valve stem and rocker arm.

   Valve Clearance Specifications:

   Intake Valve 0.0762-0.127 mm (0.003-0.005 in.)
   Exhaust Valve 0.0762-0.127 mm (0.003-0.005 in.)
8. Tighten rocker pivot with a wrench until a slight drag is felt on feeler gauge. Hold nut in position and tighten jam nut to 9.5 N·m (84 in. lb.). Recheck lash. Perform same adjustment procedure on opposite valve.
9. Position a new valve cover gasket on cylinder head.
10. Install valve cover and finger tighten screws.
11. Using sequence shown, tighten cover screws to 8 N·m (71 in. lb.).

Install New Spark Plug

1. Set gap of a new spark plug to 0.76 mm (0.03 in.).
2. Install spark plug and torque to 27 N·m (20 ft. lb.).

Install Flywheel Brake Assembly

Dipstick Side of Engine

1. Install spacers onto brake assembly screws.

Fuel Cap Side of Engine

1. Place brake assembly onto engine and loosely install 2 brake assembly screws.
2. Install a caliper between brake lever and bracket to establish a 50 mm (1.968 in.) gap, pivoting on rear screw if necessary.
3. Rotate brake lever clockwise around rear screw. Torque screws to 9.49 N·m (84 in. lb.). Reinstall kill lead to bottom terminal on micro switch.
4. Actuate brake arm and verify an audible click is heard from micro switch. Visually inspect all wires are connected and micro switch is moving up and down when brake arm is pulled. If an audible click from micro switch is not heard, loosen both screws and readjust.

Install Breather Assembly

1. Install breather disc and spring.
2. Install breather screen.
3. Install breather cover and secure with screws. Torque screws to 10 N·m (88 in. lb.).

Flywheel/Ignition/Fuel Tank Components

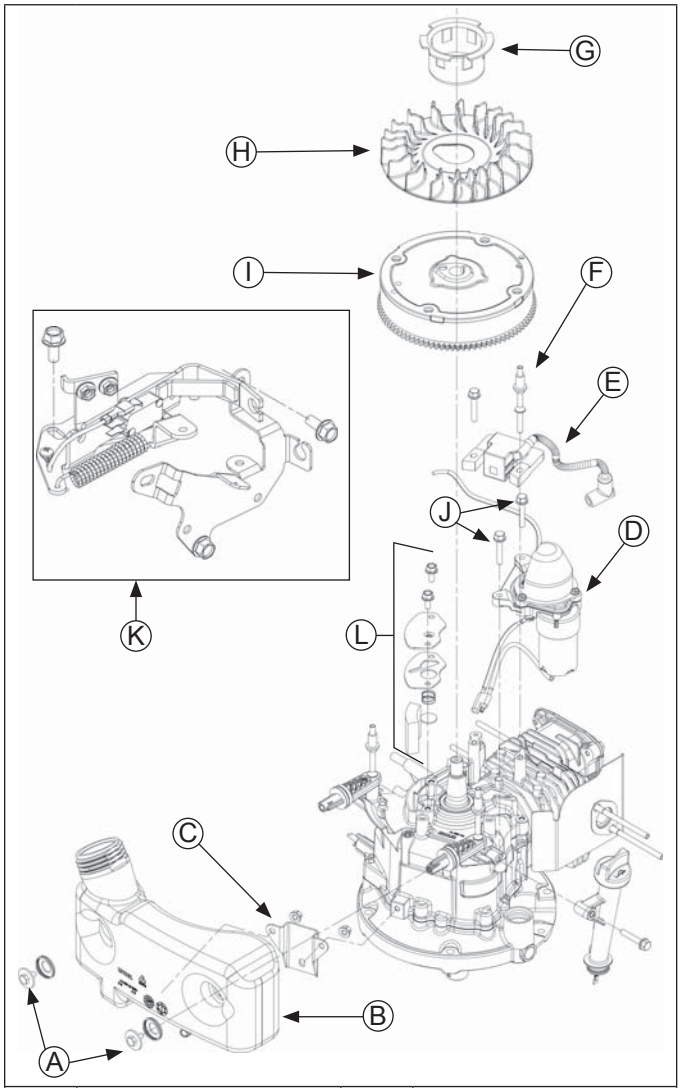

A	Screws	**B**	Fuel Tank
C	Crankcase Bracket	**D**	Electric Starter
E	Ignition Module	**F**	Stud(s)
G	Drive Cup	**H**	Fan
I	Flywheel	**J**	Screw(s)
K	Flywheel Brake Assembly	**L**	Breather Assembly

Install Flywheel

⚠ CAUTION

Damaging Crankshaft and Flywheel can cause personal injury.

Using improper procedures can lead to broken fragments. Broken fragments could be thrown from engine. Always observe and use precautions and procedures when installing flywheel.

NOTE: Before installing flywheel make sure crankshaft taper and flywheel hub are clean, dry, and completely free of lubricants. Presence of lubricants can cause flywheel to be over stressed and damaged when mounting nut is torqued to specification.

NOTE: Make sure flywheel key is installed properly in keyway. Flywheel can become cracked or damaged if key is not properly installed.

NOTE: Always use a flywheel strap wrench to hold flywheel when tightening flywheel fastener. Do not use any type of bar or wedge to prevent flywheel from rotating, as these parts could become cracked or damaged.

1. Install key, into crankshaft keyway. Make sure key is fully seated.
2. Install flywheel onto crankshaft aligning keyway with key.
3. Align teardrop slot on fan with raised teardrop on flywheel. Align drive cup on flywheel, and install and hand tighten nut.
4. Using a flywheel strap wrench, hold flywheel still while simultaneously tightening nut to 51.5 N·m (38 ft. lb.).

Install Electric Starter (if equipped)

Align and mount electric starter onto crankcase. Install and torque screws to 9.5 N·m (84 in. lb.).

Install Ignition Module

NOTE: If stud for mounting ignition module was not kept segregated from 2 studs for mounting fuel tank, compare their lengths and choose short one.

1. Rotate flywheel so ignition magnets are away from ignition module legs. Position ignition module on legs with kill tab down.
2. Loosely thread stud and screw into appropriate leg. Pull module away from flywheel and tighten stud to hold it in place. Rotate flywheel so ignition magnet is aligned with module.
3. Set air gap by placing a 0.254 mm (0.010 in.) plastic feeler gauge between magnet and module. Loosen stud and let magnet draw module against feeler gauge. Torque fasteners to 10 N·m (88 in. lb.).
4. Rotate flywheel to release feeler gauge, and check module does not come in contact with magnet. Recheck air gap.
5. Connect kill lead to ignition module kill tab.

Install Fuel Tank

1. Secure fuel tank bracket to crankcase by torquing nut to 8 N·m (71 in. lb.).
2. Secure top of fuel tank to crankcase by installing threaded studs. Torque studs to 10 N·m (88 in. lb.).
3. Install spacers on studs.

Install Flywheel Brake Spring

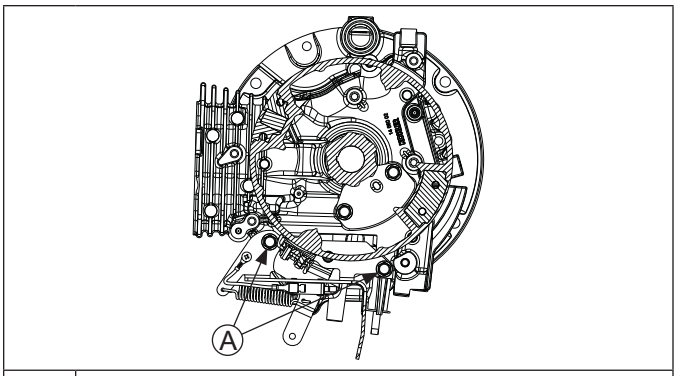

A	Brake Assembly Screws

Using a pliers, attach flywheel brake spring onto bracket hook.

Install Governor Assembly

1. Install governor lever onto governor shaft with lever up.
2. Attach throttle linkage and linkage spring to top of governor lever.

Control Components

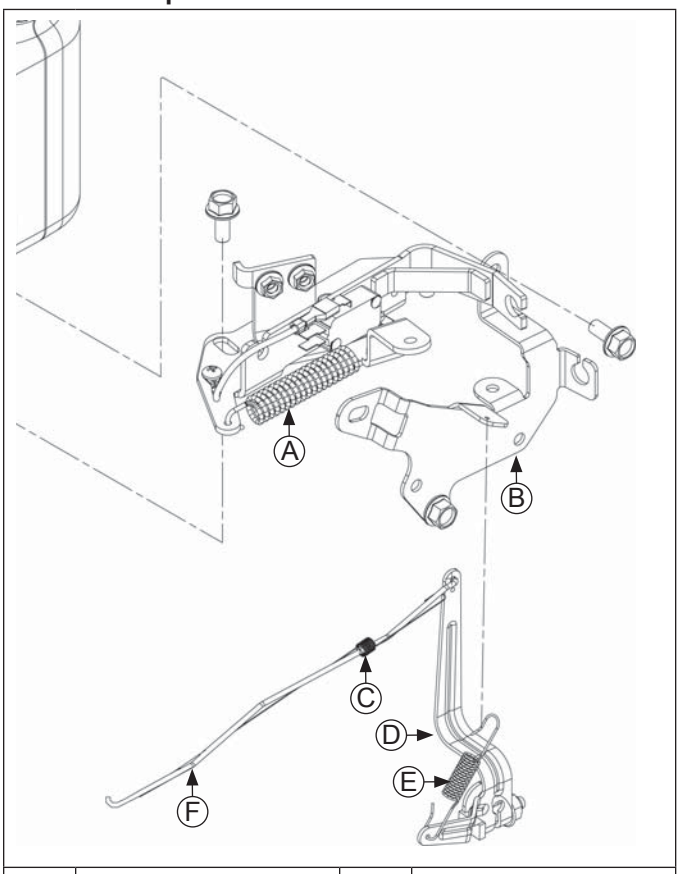

A	Flywheel Brake Spring	**B**	Speed Control Bracket
C	Linkage Spring	**D**	Governor Lever
E	Governor Spring	**F**	Throttle Linkage

Speed Bracket Details

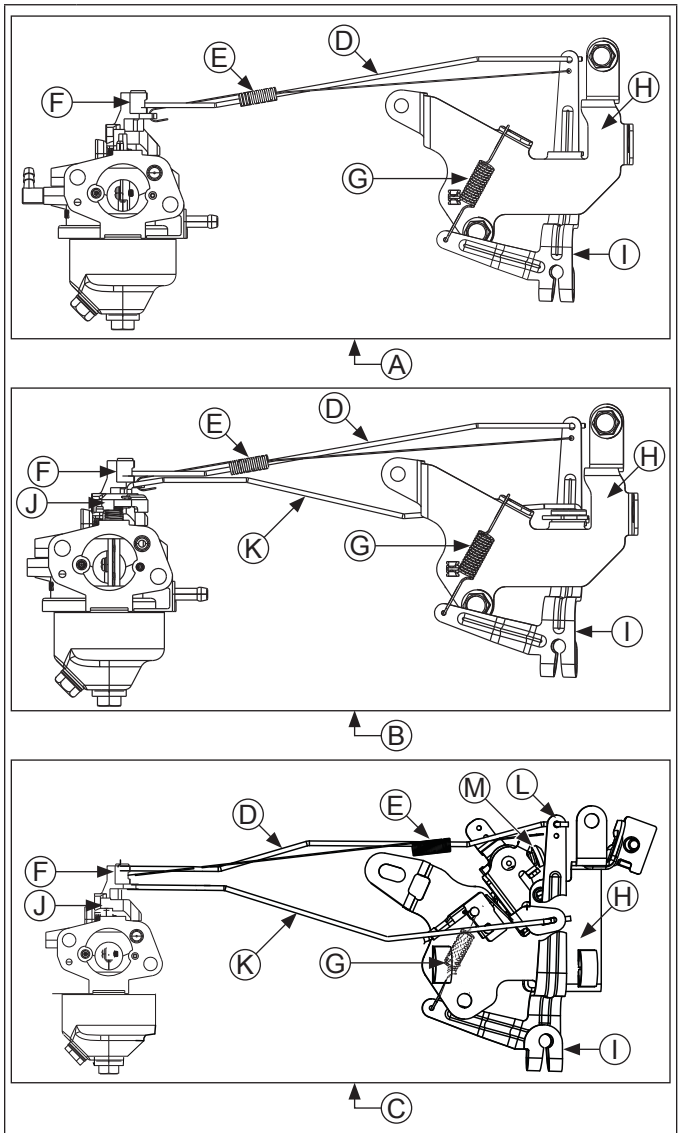

A	Fixed Speed with Primer (No Choke)	**B**	Fixed Speed with Choke
C	Variable Speed with Choke	**D**	Throttle Linkage
E	Linkage Spring	**F**	Throttle Lever
G	Governor Spring	**H**	Speed Control Bracket
I	Governor Lever	**J**	Choke Lever
K	Choke Linkage	**L**	Dual Throttle Choke Control
M	Speed Control Screw		

Install Speed Control Bracket

NOTE: There are 3 different speed bracket variations for this engine. Images shown identify how different brackets connect to carburetors with and without choke.

Loosely attach speed control bracket to crankcase using shorter screws. Long screw will be used later for attaching air cleaner body.

Install Governor Spring

Install governor spring between governor lever and speed control bracket.

Carburetor Components

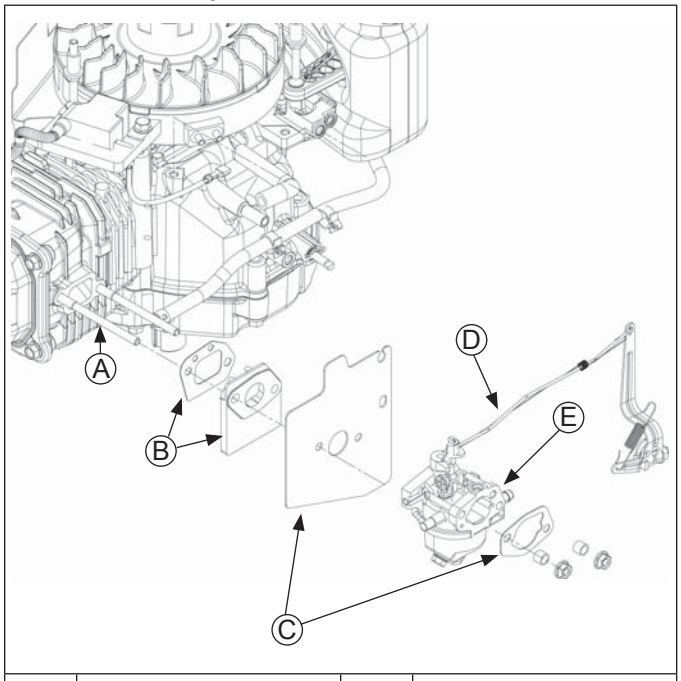

A	Carburetor Stud(s)	**B**	Gasket and Spacer Kit
C	Gasket and Heat Shield Kit	**D**	Linkage
E	Carburetor		

Install Carburetor Gaskets
Place spacer gasket, cylinder head spacer and heat deflector gasket on carburetor studs in order shown.

Install Carburetor and Linkage

NOTE: There are several different ways to attach carburetor linkage depending on carburetor and speed bracket used.

Install Carburetor with Primer (if equipped)
1. With carburetor not yet mounted on studs, rotate it slightly to allow connection of throttle linkage and linkage spring to throttle lever.
2. Slide carburetor onto mounting studs.

Install Carburetor with Choke
1. With carburetor not yet mounted on studs, rotate it slightly and slot elbow, at end of linkage, into choke lever.
2. Connect throttle linkage and linkage spring to throttle lever on carburetor.
3. Slide carburetor onto mounting studs.

Auto Choke Components

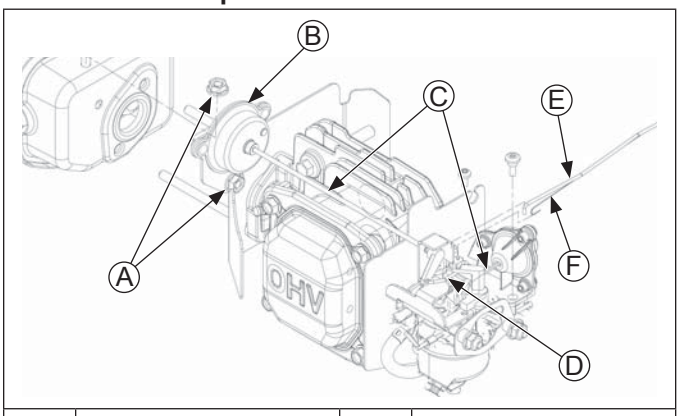

A	Nut(s)	**B**	Arm Assembly
C	Linkage	**D**	Choke Linkage
E	Throttle Linkage	**F**	Linkage Spring

Install Carburetor with Auto Choke (if equipped)
1. Mount arm assembly onto muffler securing with nuts. Torque to 8.5 N·m (75 in. lb.).
2. Connect choke linkage to arm assembly.
3. Connect throttle linkage and linkage spring to carburetor.
4. Slide carburetor onto mounting studs.
5. Insert screws connecting arm assembly to carburetor. Torque to 2.3 N·m (20 in. lb.).

Adjust Governor

Move governor lever away from carburetor to limit of its travel (wide-open throttle), and hold in this position. Do not stress, flex or distort linkage. Grasp cross shaft with a pliers and turn shaft clockwise as far as it will go, hold and tighten nut. Torque nut to 9.5 N·m (84 in. lb.).

Reconnect Fuel Line

Slide fuel line tight up against carburetor, and secure connection with a hose clamp.

External Engine Components

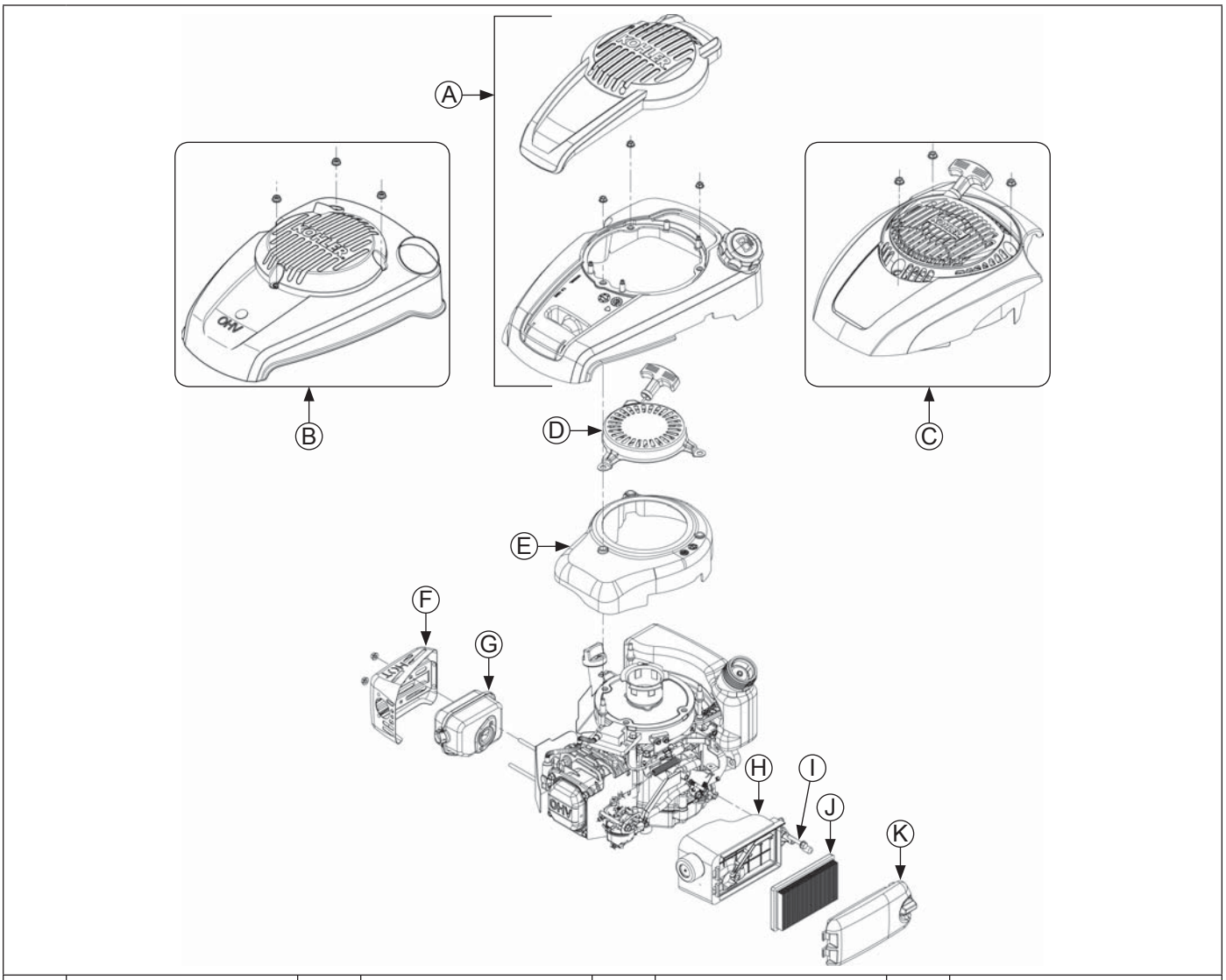

A	Engine Cover and Insert	**B**	Engine Cover	**C**	Engine Cover and Retractable Start	**D**	Retractable Starter
E	Blower Housing	**F**	Muffler Guard	**G**	Muffler	**H**	Air Cleaner Base
I	Breather Hose	**J**	Paper Element	**K**	Air Cleaner Cover		

Install Air Cleaner Assembly

1. Attach primer hose to carburetor (if equipped).
2. Slide air cleaner gasket onto carburetor studs.
3. Slide air cleaner base onto carburetor studs. Attach base by loosely screwing nuts onto studs, and screw into crankcase.
4. Attach breather hose to crankcase.
5. Secure air cleaner base by torquing nuts and screw to 8 N·m (71 in. lb.).
6. Install paper element and foam precleaner (if equipped) into air cleaner base. Attach air cleaner cover and hand tighten knob.

Install Dipstick Tube

1. Install dipstick tube to crankcase.
2. Tighten screw to 8 N·m (71 in. lb.).

Install Muffler Assembly

1. Install heat deflector gasket onto exhaust mounting studs, with gasket folds facing cylinder head.
2. Slide muffler onto exhaust studs.
3. Install muffler guard onto exhaust studs and secure with nuts. Torque to 9.5 N·m (84 in. lb.).

Install Blower Housing

Install blower housing onto studs.

Install Retractable Starter

Place retractable starter onto studs protruding from blower housing.

Install Engine Cover

Engine Cover (if equipped)

1. Install engine cover and secure it with nuts.
2. Tighten nuts to 8 N·m (71 in. lb.).

Engine Cover and Insert (if equipped)

1. Install engine cover and secure it with nuts.
2. Tighten nuts to 8 N·m (71 in. lb.).
3. Install engine cover insert (if equipped) onto engine cover, and secure with Torx screws. Tighten to 2.5 N·m (20 in. lb.).

Engine Cover Insert and Retractable Starter (if equipped)

1. Install engine cover insert and retractable starter and secure with nuts.
2. Tighten nuts to 8 N·m (71 in. lb.).

Install Fuel Cap

Screw fuel cap tightly onto fuel tank.

1P14 690 01

6 50531 96538 7

© 2011 by Kohler Co. All rights reserved.