Operation

Residential/Commercial Generator Sets

Models:

14RCA
14RCAL
20RCA
20RCAL

Controller:

RDC2

KOHLER®

TP-7092 8/18

⚠ WARNING: This product can expose you to chemicals, including carbon monoxide and benzene, which are known to the State of California to cause cancer and birth defects or other reproductive harm.
For more information go to
www.P65warnings.ca.gov

Kohler strongly recommends that only factory-authorized distributors or dealers install and service the generator.

Product Identification Information

Product identification numbers determine service parts. Record the product identification numbers in the spaces below immediately after unpacking the products so that the numbers are readily available for future reference. Record field-installed kit numbers after installing the kits.

Generator Set Identification Numbers

Record the product identification numbers from the generator set nameplate(s).

Model Designation _____

Specification Number _____

Serial Number _____

Accessory Number	Accessory Description

Controller Identification

Record the controller description from the generator set operation manual, spec sheet, or sales invoice.

Controller Description _____

Engine Identification

Record the product identification information from the engine nameplate.

Manufacturer _____

Model Designation _____

Serial Number _____

Table of Contents

Product Identification Information 2

Safety Precautions and Instructions 7

Introduction 11

Service Assistance 13

Section 1 Descriptions and Service Views 15

1.1 Introduction 15
1.2 Engine 15
1.3 Alternator 15
1.4 Generator Set Enclosure 15
1.5 Transfer Switch 15
1.6 Controller 15
1.7 Accessories 17
1.7.1 Heater Kits 17
1.7.2 OnCue Plus Generator Management System 17
1.7.3 Programmable Interface Module (PIM) 17
1.7.4 Load Management 17
1.7.5 Concrete Mounting Pads 17
1.7.6 Battery Heater Kit 17
1.8 Service Views 18

Section 2 Generator Set Operation 20

2.1 Prestart Checklist 20
2.2 Exercising the Generator Set 20
2.3 Generator Set Operation 20
2.3.1 Local Starting and Stopping 21
2.3.2 Automatic Operation 21
2.3.3 Remote Starting and Stopping 21
2.3.4 Engine Start Crank Cycle 21
2.3.5 Engine Cooldown 21
2.3.6 Automatic Operation with Model RXT Transfer Switch 21
2.3.7 Automatic Operation with Other Transfer Switches 21
2.4 Exercise 22
2.4.1 Setting the Exerciser 22
2.4.2 Unloaded Cycle Exercise with Complete System Diagnostics 22
2.4.3 Unloaded Full-Speed Exercise 23
2.4.4 Loaded Full-Speed Exercise (with RXT only) 23
2.4.5 Power Failure During Exercise Cycle 23
2.5 Faults 24
2.5.1 Warnings 24
2.5.2 Shutdowns 24
2.5.3 ATS Communication Errors 24
2.5.4 Resetting the Controller after a Fault Shutdown 24
2.5.5 Faults Related to Paralleling 27

Section 3 RDC2 Controller Operation 29

3.1 RDC2 Generator Set/Transfer Switch Controller 29
3.2 Controls and Indicators 29
3.2.1 Controller Keypad 30
3.2.2 LED Indicators 30
3.2.3 LCD Display 31
3.3 Controller Power 32
3.4 Battery Charging 32
3.5 Changing Settings 32

3.6 Setting the Exerciser 34
3.6.1 Setting the Exerciser at Controller Power-up 34
3.6.2 Changing the Exercise Settings 34
3.7 RDC2 Controller Menus 36
3.8 Main Menu 36
3.9 Overview Menu 38
3.10 Engine Metering Menu 38
3.11 Generator Metering Menu 39
3.12 Generator Set Information Menu 40
3.13 Genset Run Time Menu 40
3.14 Genset System Menu 41
3.15 ATS Status Menu 42
3.16 ATS Configuration Menu 43
3.17 Date and Time Menu 44
3.18 Networking Information Menus 44
3.18.1 Networking Status Submenu 45
3.18.2 Networking Configuration Submenu (OnCue Password) 46
3.18.3 RBUS Information 48
3.18.4 Remote Devices Submenu 49
3.19 Programmable Interface Module (PIM) Status Menu 50
3.20 Load Control Menus 51
3.21 Event Log 52

Section 4 Scheduled Maintenance 53
4.1 Scheduled Maintenance 53
4.1.1 Service Schedule, 14 kW Models 54
4.1.2 Service Schedule, 20 kW Models 55
4.2 Lubrication System 56
4.2.1 Low Oil Pressure Shutdown 56
4.2.2 Oil Check 56
4.2.3 Engine Oil Recommendation 56
4.2.4 Oil Change Procedure 57
4.2.5 Resetting the Maintenance Timer 58
4.2.6 Oil Cooler (20RCA/RCAL only) 58
4.3 Spark Plugs 59
4.4 Air Cleaner Service 60
4.4.1 Air Cleaner, 14 kW Models 60
4.4.2 Air Cleaner, 20 kW Models 61
4.5 Cooling System 62
4.6 Exhaust System 62
4.7 Battery 62
4.7.1 Cleaning the Battery 63
4.7.2 Checking Electrolyte Level 63
4.7.3 Checking Specific Gravity 63
4.8 Storage Procedure 65
4.8.1 Lubricating System 65
4.8.2 Fuel System 65
4.8.3 Cylinder Lubrication 65
4.8.4 Exterior Preparation 65
4.8.5 Battery 65

Section 5 Troubleshooting **67**
5.1 Introduction 67
5.2 Fault Messages 67
5.3 Circuit Protection 67
5.3.1 Controller Internal Circuit Protection 67
5.3.2 Line Circuit Breaker 67
5.4 USB Port and Auxiliary Winding Mini-Breaker 67
5.5 Thermostat 68
5.6 Troubleshooting 69

Appendix A Abbreviations **71**

Notes

IMPORTANT SAFETY INSTRUCTIONS. Electromechanical equipment, including generator sets, transfer switches, switchgear, and accessories, can cause bodily harm and pose life-threatening danger when improperly installed, operated, or maintained. To prevent accidents be aware of potential dangers and act safely. Read and follow all safety precautions and instructions. SAVE THESE INSTRUCTIONS.

This manual has several types of safety precautions and instructions: Danger, Warning, Caution, and Notice.

DANGER

Danger indicates the presence of a hazard that ***will cause severe personal injury, death***, or ***substantial property damage***.

WARNING

Warning indicates the presence of a hazard that ***can cause severe personal injury, death,*** or ***substantial property damage***.

CAUTION

Caution indicates the presence of a hazard that ***will*** or ***can cause minor personal injury*** or ***property damage***.

NOTICE

Notice communicates installation, operation, or maintenance information that is safety related but not hazard related.

Safety decals affixed to the equipment in prominent places alert the operator or service technician to potential hazards and explain how to act safely. The decals are shown throughout this publication to improve operator recognition. Replace missing or damaged decals.

Accidental Starting

WARNING

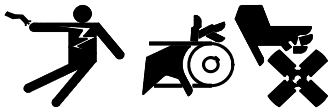

Accidental starting.
Can cause severe injury or death.

Disconnect the battery cables before working on the generator set. Remove the negative (–) lead first when disconnecting the battery. Reconnect the negative (–) lead last when reconnecting the battery.

Disabling the generator set. Accidental starting can cause severe injury or death. Before working on the generator set or equipment connected to the set, disable the generator set as follows: (1) Press the generator set off/reset button to shut down the generator set. (2) Disconnect the power to the battery charger, if equipped. (3) Remove the battery cables, negative (–) lead first. Reconnect the negative (–) lead last when reconnecting the battery. Follow these precautions to prevent the starting of the generator set by the remote start/stop switch.

Battery

WARNING

Sulfuric acid in batteries.
Can cause severe injury or death.

Wear protective goggles and clothing. Battery acid may cause blindness and burn skin.

WARNING

Explosion.
Can cause severe injury or death. Relays in the battery charger cause arcs or sparks.

Locate the battery in a well-ventilated area. Isolate the battery charger from explosive fumes.

Battery electrolyte is a diluted sulfuric acid. Battery acid can cause severe injury or death. Battery acid can cause blindness and burn skin. Always wear splashproof safety goggles, rubber gloves, and boots when servicing the battery. Do not open a sealed battery or mutilate the battery case. If battery acid splashes in the eyes or on the skin, immediately flush the affected area for 15 minutes with large quantities of clean water. Seek immediate medical aid in the case of eye contact. Never add acid to a battery after placing the battery in service, as this may result in hazardous spattering of battery acid.

Battery acid cleanup. Battery acid can cause severe injury or death. Battery acid is electrically conductive and corrosive. Add 500 g (1 lb.) of bicarbonate of soda (baking soda) to a container with 4 L (1 gal.) of water and mix the neutralizing solution. Pour the neutralizing solution on the spilled battery acid and continue to add the neutralizing solution to the spilled battery acid until all evidence of a chemical reaction (foaming) has ceased. Flush the resulting liquid with water and dry the area.

Battery gases. Explosion can cause severe injury or death. Battery gases can cause an explosion. Do not smoke or permit flames or sparks to occur near a battery at any time, particularly when it is charging. Do not dispose of a battery in a fire. To prevent burns and sparks that could cause an explosion, avoid touching the battery terminals with tools or other metal objects. Remove all jewelry before servicing the equipment. Discharge static electricity from your body before touching batteries by first touching a grounded metal surface away from the battery. To avoid sparks, do not disturb the battery charger connections while the battery is charging. Always turn the battery charger off before disconnecting the battery connections. Ventilate the compartments containing batteries to prevent accumulation of explosive gases.

Battery short circuits. Explosion can cause severe injury or death. Short circuits can cause bodily injury and/or equipment damage. Disconnect the battery before generator set installation or maintenance. Remove all jewelry before servicing the equipment. Use tools with insulated handles. Remove the negative (–) lead first when disconnecting the battery. Reconnect the negative (–) lead last when reconnecting the battery. Never connect the negative (–) battery cable to the positive (+) connection terminal of the starter solenoid. Do not test the battery condition by shorting the terminals together.

Engine Backfire/Flash Fire

⚠ WARNING

Risk of fire.
Can cause severe injury or death.

Do not smoke or permit flames or sparks near fuels or the fuel system.

Servicing the air cleaner. A sudden backfire can cause severe injury or death. Do not operate the generator set with the air cleaner removed.

Servicing the fuel system. A flash fire can cause severe injury or death. Do not smoke or permit flames or sparks near the carburetor, fuel line, fuel filter, fuel pump, or other potential sources of spilled fuels or fuel vapors. Catch fuels in an approved container when removing the fuel line or carburetor.

Combustible materials. A fire can cause severe injury or death. Generator set engine fuels and fuel vapors are flammable and explosive. Handle these materials carefully to minimize the risk of fire or explosion. Equip the compartment or nearby area with a fully charged fire extinguisher. Select a fire extinguisher rated ABC or BC for electrical fires or as recommended by the local fire code or an authorized agency. Train all personnel on fire extinguisher operation and fire prevention procedures.

Exhaust System

⚠ WARNING

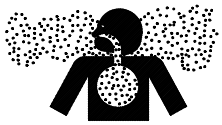

Carbon monoxide.
Can cause severe nausea, fainting, or death.

The exhaust system must be leakproof and routinely inspected.

Generator set operation. Carbon monoxide can cause severe nausea, fainting, or death. Carbon monoxide is an odorless, colorless, tasteless, nonirritating gas that can cause death if inhaled for even a short time. Avoid breathing exhaust fumes when working on or near the generator set. Never operate the generator set inside a building. Never operate the generator set where exhaust gas could seep inside or be drawn into a potentially occupied building through windows, air intake vents, or other openings.

Carbon monoxide detectors. Carbon monoxide can cause severe nausea, fainting, or death. Install carbon monoxide detectors on each level of any building adjacent to the generator set. Locate the detectors to adequately warn the building's occupants of the presence of carbon monoxide. Keep the detectors operational at all times. Periodically test and replace the carbon monoxide detectors according to the manufacturer's instructions.

Carbon monoxide symptoms. Carbon monoxide can cause severe nausea, fainting, or death. Carbon monoxide is a poisonous gas present in exhaust gases. Carbon monoxide is an odorless, colorless, tasteless, nonirritating gas that can cause death if inhaled for even a short time. Carbon monoxide poisoning symptoms include but are not limited to the following:

- Light-headedness, dizziness
- Physical fatigue, weakness in joints and muscles
- Sleepiness, mental fatigue, inability to concentrate or speak clearly, blurred vision
- Stomachache, vomiting, nausea

If experiencing any of these symptoms and carbon monoxide poisoning is possible, seek fresh air immediately and remain active. Do not sit, lie down, or fall asleep. Alert others to the possibility of carbon monoxide poisoning. Seek medical attention if the condition of affected persons does not improve within minutes of breathing fresh air.

Fuel System

⚠ WARNING

Explosive fuel vapors.
Can cause severe injury or death.

Use extreme care when handling, storing, and using fuels.

The fuel system. Explosive fuel vapors can cause severe injury or death. Vaporized fuels are highly explosive. Use extreme care when handling and storing fuels. Store fuels in a well-ventilated area away from spark-producing equipment and out of the reach of children. Never add fuel to the tank while the engine is running because spilled fuel may ignite on contact with hot parts or from sparks. Do not smoke or permit flames or sparks to occur near sources of spilled fuel or fuel vapors. Keep the fuel lines and connections tight and in good condition. Do not replace flexible fuel lines with rigid lines. Use flexible sections to avoid fuel line breakage caused by vibration. Do not operate the generator set in the presence of fuel leaks, fuel accumulation, or sparks. Repair fuel systems before resuming generator set operation.

Gas fuel leaks. Explosive fuel vapors can cause severe injury or death. Fuel leakage can cause an explosion. Check the LPG vapor or natural gas fuel system for leakage by using a soap and water solution with the fuel system test pressurized to 6–8 ounces per square inch (10–14 inches water column). Do not use a soap solution containing either ammonia or chlorine because both prevent bubble formation. A successful test depends on the ability of the solution to bubble.

Hazardous Noise

⚠ CAUTION

Hazardous noise.
Can cause hearing loss.

Never operate the generator set without a muffler or with a faulty exhaust system.

Engine noise. Hazardous noise can cause hearing loss. Generator sets not equipped with sound enclosures can produce noise levels greater than 105 dBA. Prolonged exposure to noise levels greater than 85 dBA can cause permanent hearing loss. Wear hearing protection when near an operating generator set.

Hazardous Voltage/ Moving Parts

⚠ DANGER

Hazardous voltage.
Will cause severe injury or death.

This equipment must be installed and serviced by qualified electrical personnel.

⚠ DANGER

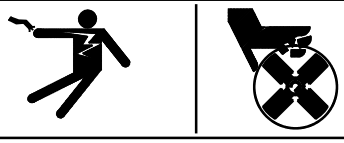

Hazardous voltage. Moving parts.
Will cause severe injury or death.

Operate the generator set only when all guards and electrical enclosures are in place.

⚠ WARNING

Hazardous voltage.
Backfeed to the utility system can cause property damage, severe injury, or death.

If the generator set is used for standby power, install an automatic transfer switch to prevent inadvertent interconnection of standby and normal sources of supply.

⚠ CAUTION

Welding the generator set.
Can cause severe electrical equipment damage.

Never weld components of the generator set without first disconnecting the battery, controller wiring harness, and engine electronic control module (ECM).

Grounding electrical equipment. Hazardous voltage will cause severe injury or death. Electrocution is possible whenever electricity is present. Ensure you comply with all applicable codes and standards. Electrically ground the generator set, transfer switch, and related equipment and electrical circuits. Turn off the main circuit breakers of all power sources before servicing the equipment. Never contact electrical leads or appliances when standing in water or on wet ground because these conditions increase the risk of electrocution.

Welding on the generator set. Can cause severe electrical equipment damage. Before welding on the generator set perform the following steps: (1) Remove the battery cables, negative (–) lead first. (2) Disconnect all engine electronic control module (ECM) connectors. (3) Disconnect all generator set controller and voltage regulator circuit board connectors. (4) Disconnect the engine battery-charging alternator connections. (5) Attach the weld ground connection close to the weld location.

Connecting the battery and the battery charger. Hazardous voltage will cause severe injury or death. Reconnect the battery correctly, positive to positive and negative to negative, to avoid electrical shock and damage to the battery charger and battery(ies). Have a qualified electrician install the battery(ies).

Short circuits. Hazardous voltage/current will cause severe injury or death. Short circuits can cause bodily injury and/or equipment damage. Do not contact electrical connections with tools or jewelry while making adjustments or repairs. Remove all jewelry before servicing the equipment.

Electrical backfeed to the utility. Hazardous backfeed voltage can cause severe injury or death. Install a transfer switch in standby power installations to prevent the connection of standby and other sources of power. Electrical backfeed into a utility electrical system can cause severe injury or death to utility personnel working on power lines.

Heavy Equipment

⚠ WARNING

Unbalanced weight.
Improper lifting can cause severe injury or death and equipment damage.

Do not use lifting eyes.
Lift the generator set using lifting bars inserted through the lifting holes on the skid.

Hot Parts

⚠ WARNING

Hot engine and exhaust system. Can cause severe injury or death.

Do not work on the generator set until it cools.

Servicing the exhaust system. Hot parts can cause severe injury or death. Do not touch hot engine parts. The engine and exhaust system components become extremely hot during operation.

Servicing the engine heater. Hot parts can cause minor personal injury or property damage. Install the heater before connecting it to power. Operating the heater before installation can cause burns and component damage. Disconnect power to the heater and allow it to cool before servicing the heater or nearby parts.

Notice

NOTICE

Canadian installations only. For standby service connect the output of the generator set to a suitably rated transfer switch in accordance with Canadian Electrical Code, Part 1.

This manual provides operation and maintenance instructions for residential/commercial model 14/20RCA/RCAL generator sets equipped with the RDC2 generator set/transfer switch controller. See Figure 1.

Kohler strongly recommends that only factory-authorized distributors or dealers install and service the generator.

Have the generator set installed by an authorized distributor/dealer or service technician. Refer to the Installation Manual for installation instructions.

Information in this publication represents data available at the time of print. Kohler Co. reserves the right to change this publication and the products represented without notice and without any obligation or liability whatsoever.

Read this manual and carefully follow all procedures and safety precautions to ensure proper equipment operation and to avoid bodily injury. Read and follow the Safety Precautions and Instructions section at the beginning of this manual. Keep this manual with the equipment for future reference.

The equipment service requirements are very important to safe and efficient operation. Inspect the parts often and perform required service at the prescribed intervals. Obtain service from an authorized service distributor/dealer to keep equipment in top condition.

Figure 1 Generator Set

List of Related Literature

Figure 2 identifies literature available for the generator sets covered in this manual and related accessories. Only trained and qualified personnel should install or service the generator set.

Generator Set Literature	Part Number
Specification Sheet, 14RCA	G4-270
Specification Sheet, 14RCAL	G4-271
Specification Sheet, 20RCA	G4-272
Specification Sheet, 20RCAL	G4-273
Installation Manual, Generator Set	TP-7091
Service Manual, Generator Set	TP-7093
Transfer Switch Literature	
Operation/Installation Manual, Model RXT Automatic Transfer Switch	TP-6807
Operation/Installation Manual, Model RDT Automatic Transfer Switch	TP-6345
Accessory Literature	
User Guide, OnCue® Plus	TP-7006
Technical Manual, OnCue® Plus	TP-7007
Operation Manual, SiteTech™ Software	TP-6701
Installation Instructions, Load Shed Kit	TT-1609
Installation Instructions, Programmable Interface Module (PIM)	TT-1584
Installation Instructions, PowerSync® Automatic Paralleling Module (APM)	TT-1596

Figure 2 Related Literature

Nameplate

The following illustration shows a typical generator set nameplate. Copy the model, serial, and specification numbers from the nameplate into the spaces provided in the product information section on the inside front cover of this manual. See the service views in Section 1.8 for the nameplate location.

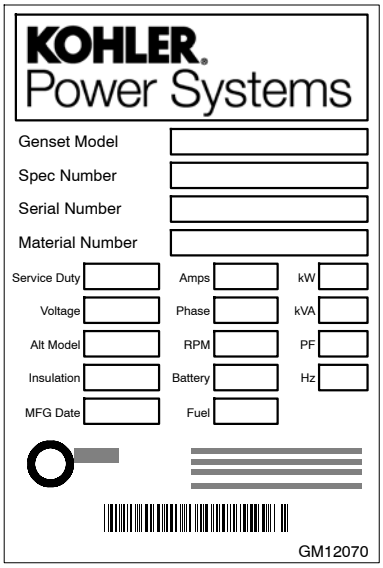

Emission Information

The Kohler® Model CH740 engine used on the 14RCA/RCAL generator set is certified to operate using natural gas or propane fuel.

The Kohler® Model CH1000 engine used on the 20RCA/RCAL generator sets is certified to operate using natural gas or propane fuel for emergency standby use only. This generator set is certified by the U.S. EPA for emergency standby operation backing up a reliable utility source. Operation outside these guidelines is a violation of national EPA regulations.

The Emission Compliance Period referred to on the Emission Control or Air Index label indicates the number of operating hours for which the engine has been shown to meet CARB or EPA emission requirements. Figure 3 provides the engine compliance period (in hours) associated with the category descriptor, which may be found on the certification label.

Emission Compliance Period			
EPA	Category C 250 hours	Category B 500 hours	Category A 1000 hours
CARB	Moderate 125 hours	Intermediate 250 hours	Extended 500 hours

Figure 3 Emission Compliance Period

Refer to the certification label for engine displacement.

The exhaust emission control system for the CH740 engines (14RCA/RCAL) is EM for U.S. EPA, California, and Europe.

The exhaust emission control system for the CH1000 engine (20RCA/RCAL) is EM for U.S. EPA, California, and Europe.

Generator Set Application

Kohler® Co. ensures that all Kohler® generator sets are certified to applicable standards for their intended application. It is the owner/operator's responsibility to operate Kohler® generator sets exclusively according to the directions provided in the accompanying operation manuals.

Kohler® generator sets designated as Stationary Standby, Emergency or Emergency Standby may only be operated for emergency power generation and for maintenance/testing. Emergency power generation is limited to power production when electric power from a local utility (or the normal power source, if the facility runs on its own power production) is interrupted. Stationary non-emergency application of a Standby, Emergency, or Emergency Standby rated generator set is not allowed.

The U.S. Clean Air Act explicitly prohibits using Emergency Standby generator sets as a primary electric power source regardless of whether a site is connected to the electrical grid. Emergency Standby generators may NOT be used to power sites which are not connected to an electric utility.

Owners/operators must ensure that the generator is operated, exercised, and maintained according to this operation manual. Owners/operators must retain maintenance records.

For professional advice on generator set power requirements and conscientious service, please contact your nearest Kohler distributor or dealer.

- Visit the Kohler Co. website at KOHLERPower.com.
- Look at the labels and decals on your Kohler product or review the appropriate literature or documents included with the product.
- Call toll free in the US and Canada 1-800-544-2444.
- Outside the US and Canada, call the nearest regional office.

Headquarters Europe, Middle East, Africa (EMEA)
Kohler EMEA Headquarters
Netherlands B.V.
Kristallaan 1
4761 ZC Zevenbergen
The Netherlands
Phone: (31) 168 331630
Fax: (31) 168 331631

Asia Pacific
Kohler Asia Pacific Headquarters
Singapore, Republic of Singapore
Phone: (65) 6264-6422
Fax: (65) 6264-6455

China
North China Regional Office, Beijing
Phone: (86) 10 6518 7950
(86) 10 6518 7951
(86) 10 6518 7952
Fax: (86) 10 6518 7955

East China Regional Office, Shanghai
Phone: (86) 21 6288 0500
Fax: (86) 21 6288 0550

India, Bangladesh, Sri Lanka
India Regional Office
Bangalore, India
Phone: (91) 80 3366208
(91) 80 3366231
Fax: (91) 80 3315972

Japan, Korea
North Asia Regional Office
Tokyo, Japan
Phone: (813) 3440-4515
Fax: (813) 3440-2727

Notes

1.1 Introduction

The generator set specification sheets provide specific generator and engine information. Refer to the spec sheet for data not supplied in this manual. Consult the generator set service manual, engine operation manual, and engine service manual for additional specifications. Obtain copies of the latest spec sheets, manuals, diagrams, and drawings from your local distributor/ dealer.

1.2 Engine

The generator set has a four-cycle, twin cylinder, air-cooled Kohler® engine. The engine operates on clean-burning natural gas or LPG. Engine features include:

- Efficient overhead valve design and full pressure lubrication for maximum power, torque, and reliability under all operating conditions.
- Dependable, maintenance-free electronic ignition.
- Precision-formulated cast iron construction of parts subjected to the most wear and tear.
- Field-convertible multi-fuel systems that allow fuel changeover from natural gas to LPG (and vice- versa) while maintaining emissions certification.
- Digital spark advance optimizes ignition timing for the selected fuel.

1.3 Alternator

The generator uses Kohler's unique PowerBoost™ voltage regulation system, which provides instant response to load changes.

PowerBoost™ ensures reliable motor starting and consistent voltage levels. PowerBoost™ utilizes a voltage excitation system that employs a winding independent of the main output windings to provide excitation voltage.

1.4 Generator Set Enclosure

The generator set is housed in an aluminum enclosure with our fade-, scratch-, and corrosion-resistant Kohler® Power Armor™ automotive-grade textured cashmere finish. The enclosure has a hinged, locking roof that allows easy access to the generator set controller when required, but locks securely to prevent unauthorized access.

To open the roof, insert the key provided with the enclosure and turn counterclockwise 1/4 turn. Then just raise the roof. The roof stays open until you are ready to close it.

Be sure to close and lock the enclosure, and keep the key in a secure location.

1.5 Transfer Switch

The RDC2 controller is designed to interface with and control the Kohler Model RXT Automatic Transfer Switch (ATS).

If the power system uses a different model transfer switch, the RDC2 controller will not control the transfer switch. An ATS other than the Model RXT must be equipped with a transfer switch controller and engine start contacts that connect to the remote engine start terminals on the generator set.

1.6 Controller

RCA and RCAL models are equipped with the RDC2 controller. See Figure 1-1.

The controller provides integrated control for the generator set, Kohler® Model RXT transfer switch, programmable interface module (PIM) and load management devices.

The controller's 2-line LCD screen displays status messages and system settings that are clear and easy to read, even in direct sunlight or low light.

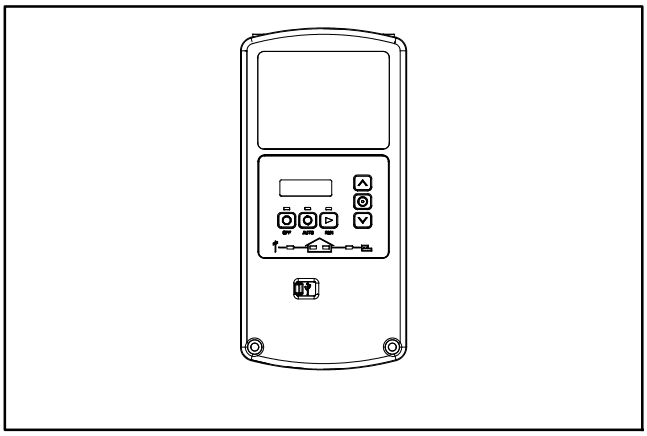

Figure 1-1 RDC2 Generator Set Controller

RDC2 Controller Features

- Six-button keypad
  - OFF, AUTO, and RUN pushbuttons
  - Select and arrow buttons for access to system configuration and adjustment menus
- LED indicators for OFF, AUTO, and RUN modes
- LED indicators for utility power and generator set source availability and ATS position (Model RXT transfer switch required)
- LCD display
  - Two lines x 16 characters per line
  - Backlit display with adjustable contrast for excellent visibility in all lighting conditions
- Scrolling system status display
  - Generator set status
  - Voltage and frequency
  - Engine lube oil temperature
  - Oil pressure
  - Battery voltage
  - Engine runtime hours
- Date and time displays
- Smart engine cooldown senses engine temperature
- Digital isochronous governor to maintain steady-state speed at all loads
- Digital voltage regulation: ±0.5% RMS no-load to full-load
- Automatic start with programmed cranking cycle
- Programmable exerciser can be set to start automatically on any future day and time, and run every week or every two weeks
- Exercise modes
  - Unloaded cycle exercise with complete system diagnostics
  - Unloaded full-speed exercise
  - Loaded full-speed exercise (Model RXT ATS required)
- Front-access mini USB connector for Kohler® SiteTech™ connection
- Integral Ethernet connector for the Kohler® OnCue® Plus Generator Management System
- Built-in battery charger
- Remote two-wire start/stop capability for connection of Model RDT or other transfer switches
- Diagnostic messages
  - Displays diagnostic messages for the engine, generator, Model RXT transfer switch, programmable interface module (PIM), and load management device
  - Over 70 diagnostic messages can be displayed
- Maintenance reminders
- System settings
  - System voltage, frequency, and phase
  - Voltage adjustment
  - Measurement system, English or metric
- ATS status (Model RXT ATS required)
  - Source availability
  - ATS position (normal/utility or emergency/generator)
  - Source voltage and frequency
- ATS control (Model RXT ATS required)
  - Source voltage and frequency settings
  - Engine start time delay
  - Transfer time delays
  - Voltage calibration
  - Fixed pickup and dropout settings
- Programmable Interface Module (PIM) status displays
  - Input status (active/inactive)
  - Output status (active/inactive)
- Load control menus
  - Load status
  - Test function

1.7 Accessories

The following optional accessories are offered for the generator sets.

1.7.1 Heater Kits

Optional carburetor heaters and a cold starting package are available. Heater kits are recommended for improved cold starting in locations where the ambient temperature drops below 0°C (32°F).

The cold starting package includes:

- Alternator brush cover
- Battery heater
- Breather tube heater
- Fuel regulator heater
- Oil heater
- Oil pressure sensor cover
- 3-way extension cord for power connection

The carburetor heater kits are sold separately. The fuel regulator heater and battery heater kits are also available separately.

The heaters require a continuous source of AC power. See the generator set Installation Manual and the installation instructions provided with the kits for more information.

1.7.2 OnCue Plus Generator Management System

The Kohler® OnCue® Plus Generator Management System allows monitoring and control of your generator set from your home or other location with Internet access using a computer or mobile device. OnCue® Plus can be configured to send email or text message notifications in the event of a generator set fault.

1.7.3 Programmable Interface Module (PIM)

The optional Programmable Interface Module (PIM) provides two programmable inputs and six programmable dry contact outputs for connection to customer-supplied equipment. The outputs are controlled by the RDC2 controller, and can also be controlled remotely using OnCue Plus.

The PIM is mounted in a NEMA 3R aluminum enclosure, which can be mounted indoors or outdoors. See the installation instructions provided with the PIM.

1.7.4 Load Management

Two optional load management devices are available for use with single-phase generator sets and a model RXT or RDT transfer switch.

- The optional Load Shed Kit mounts inside a model RDT or RXT transfer switch.
- The combined interface/load management board is available for the Model RXT transfer switch.

The load management devices provide an automatic load management system to comply with Section 702.5 of NEC 2008. The installer is responsible for ensuring that the power system installation complies with all applicable state and local codes.

Note: The load management devices are only compatible with single-phase generator sets.

The load management device automatically manages up to six residential loads. Two relays are provided to control two independent air conditioner loads. Up to four power relay modules can be connected for management of non-essential secondary loads.

The load management device is controlled by the RDC2 controller. The load on the generator set is monitored, and loads are added or shed in the order of their priority. See the installation instructions provided with the load shed kit or the Model RXT Operation and Installation Manual for more information.

1.7.5 Concrete Mounting Pads

Kohler offers optional concrete mounting pads that are custom-designed for Model 14RCA/RCAL and 20RCA/RCAL generator sets. Three-inch and four-inch thick pads are available. Four-inch pads are recommended for storm-prone areas.

1.7.6 Battery Heater Kit

The battery heater kit includes a thermostatically-controlled battery heating wrap to warm the battery in cold weather. Battery heater kits are recommended for generator installed in regions where the temperature regularly falls below 0°C (32°F).

1.8 Service Views

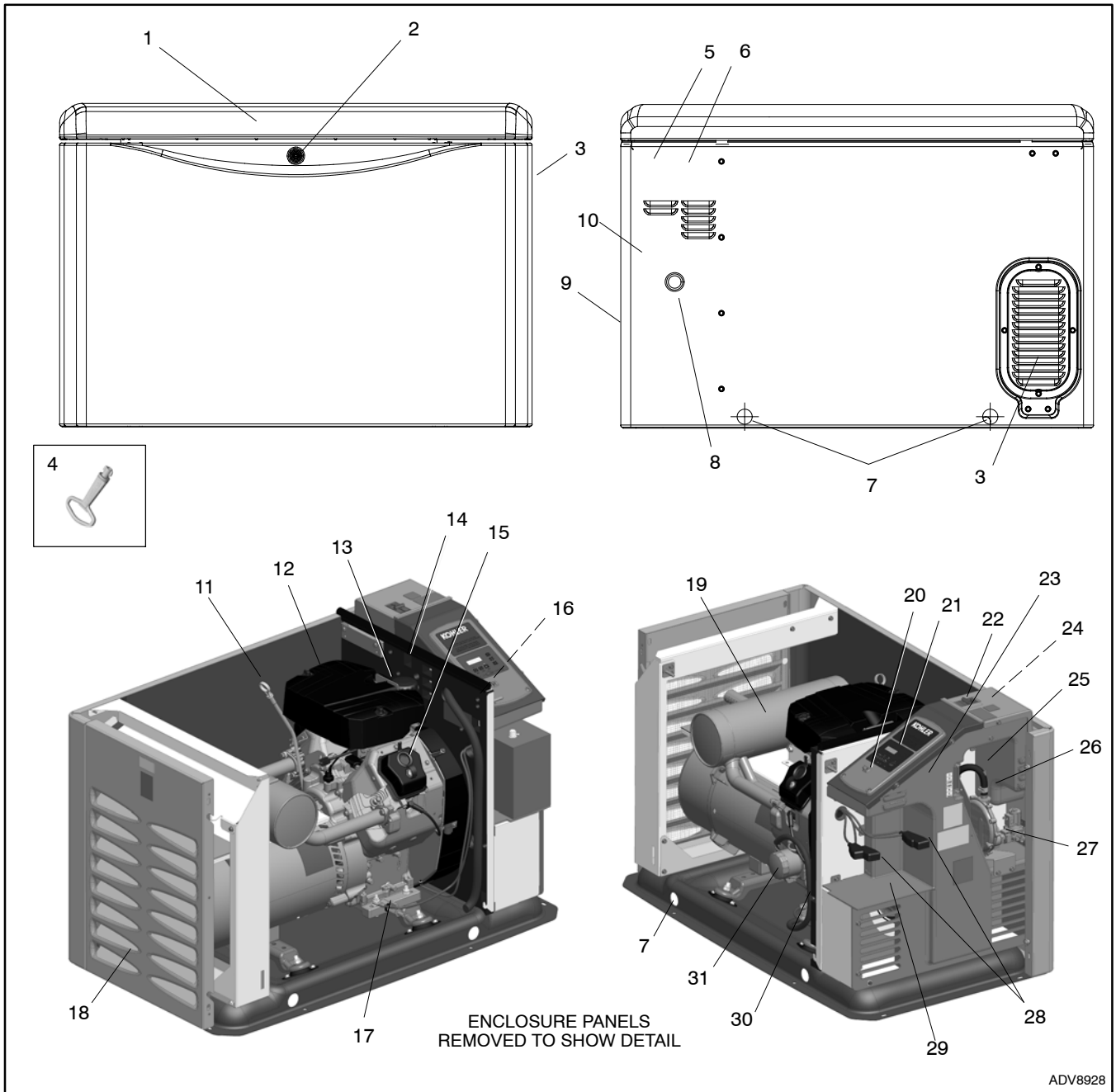

1. Hinged roof
2. Lock
3. Air intake
4. Enclosure key, provided with generator set
5. High voltage electrical in
6. Optional emergency stop button location
7. Lifting holes
8. Fuel inlet
9. Air intake
10. Low voltage electrical in
11. Oil check (dipstick)
12. Air cleaner
13. Oil filter (20 kW models)
14. Auxiliary winding circuit breaker
15. Oil fill
16. AC receptacles for accessories (not shown)
17. Oil drain valve
18. Exhaust outlet
19. Muffler
20. USB connector (for firmware updates)
21. RDC2 controller
22. Line circuit breaker
23. Nameplate location
24. Field-connection terminal block (behind panel)
25. Digital spark advance ignition (DSAI) lead location (14RCA/L only)
26. Thermostat location
27. Fuel system
28. Battery cables (provided)
29. Engine starting battery location (battery purchased separately)
30. Oil drain hose (shown in storage position)
31. Oil filter (14 kW models)

Figure 1-2 Service Views (20 kW model shown)

2.1 Prestart Checklist

To ensure continued satisfactory operation, perform the following checks or inspections before or at each startup, as designated, and at the intervals specified in the service schedule. In addition, some checks require verification after the unit starts.

Air Cleaner. Check for a clean and installed air cleaner element to prevent unfiltered air from entering the engine.

Air Inlets. Check for clean and unobstructed air inlets.

Battery. Check for tight battery connections. Consult the battery manufacturer's instructions regarding battery care and maintenance.

Exhaust System. Check for exhaust leaks and blockages. Check the muffler condition.

- Inspect the exhaust system components for cracks, leaks, and corrosion. Check for tight exhaust system connections.
- Check for corroded or broken metal parts and replace them as needed.
- Check that the exhaust outlet is unobstructed.

Oil Level. Check the oil level before starting the generator set and at the intervals given in Section 4, Scheduled Maintenance. Maintain the oil level at or near, not over, the full mark on the dipstick.

Operating Area. Check for obstructions that could block the flow of cooling air. Keep the air intake area clean. Do not leave rags, tools, or debris on or near the generator set.

2.2 Exercising the Generator Set

Operate the generator set once each week for 20 minutes. See Section 2.4 for information about loaded and unloaded exercise modes. For instructions to set the exerciser, see Section 3.6, Setting the Exerciser.

2.3 Generator Set Operation

⚠ DANGER

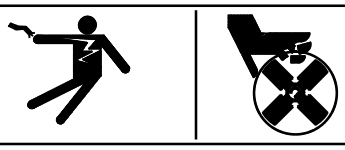

Hazardous voltage. Moving parts. Will cause severe injury or death.

Operate the generator set only when all guards and electrical enclosures are in place.

⚠ WARNING

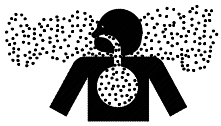

Carbon monoxide. Can cause severe nausea, fainting, or death.

The exhaust system must be leakproof and routinely inspected.

Generator set operation. Carbon monoxide can cause severe nausea, fainting, or death. Carbon monoxide is an odorless, colorless, tasteless, nonirritating gas that can cause death if inhaled for even a short time. Avoid breathing exhaust fumes when working on or near the generator set. Never operate the generator set inside a building. Never operate the generator set where exhaust gas could seep inside or be drawn into a potentially occupied building through windows, air intake vents, or other openings.

Carbon monoxide symptoms. Carbon monoxide can cause severe nausea, fainting, or death. Carbon monoxide is a poisonous gas present in exhaust gases. Carbon monoxide is an odorless, colorless, tasteless, nonirritating gas that can cause death if inhaled for even a short time. Carbon monoxide poisoning symptoms include but are not limited to the following:

- Light-headedness, dizziness
- Physical fatigue, weakness in joints and muscles
- Sleepiness, mental fatigue, inability to concentrate or speak clearly, blurred vision
- Stomachache, vomiting, nausea

If experiencing any of these symptoms and carbon monoxide poisoning is possible, seek fresh air immediately and remain active. Do not sit, lie down, or fall asleep. Alert others to the possibility of carbon monoxide poisoning. Seek medical attention if the condition of affected persons does not improve within minutes of breathing fresh air.

2.3.1 Local Starting and Stopping

Start: Press the RUN button to immediately start the generator set.

Stop: Press the OFF button. The engine stops.

Run the generator set with no load for at least 2 minutes to ensure adequate engine cooldown.

2.3.2 Automatic Operation

An automatic transfer switch monitors the utility power and signals the generator set to start when utility power is lost. The ATS then transfers the load to the generator set.

When utility power is restored, the transfer switch transfers the load back to utility, runs the generator set with no load to cool down the engine, and then stops the generator set.

See Sections 2.3.6 and 2.3.7 for more information about automatic operation.

2.3.3 Remote Starting and Stopping

A remote switch connected to terminals 3 and 4 can be used to start and stop the generator set. Close the switch to start and run the generator set. Open the switch to stop the generator set.

Run the generator set with no load for at least 2 minutes to ensure adequate engine cooldown.

2.3.4 Engine Start Crank Cycle

The controller attempts to start the generator set three times (three crank cycles, 15 seconds crank and 15 seconds off). If the generator set does not start in three attempts, the system shuts down on an overcrank fault. See Section 2.5.

Cranking 1, 2, and 3 are displayed during the crank cycle. Pressing the OFF button during the crank cycle stops the cranking. No other buttons are acknowledged during the crank cycle.

2.3.5 Engine Cooldown

The engine cooldown time delay allows the engine to run after the loads have been removed.

The engine cooldown time delay is set to 5 minutes. The engine stops before the cooldown time delay expires if the temperature drops below the cooled-down temperature level, or if the temperature rises above the high limit during the cooldown cycle.

If a transfer switch other than the Model RXT is used, an additional engine cooldown time delay may be programmed on the transfer switch. To allow the smart engine cooldown on the RDC2 controller to operate most efficiently, set the cooldown time on the transfer switch controller to zero or the minimum time allowed. Refer to the instructions provided with the transfer switch for more information.

2.3.6 Automatic Operation with Model RXT Transfer Switch

The Model RXT transfer switch connects to the RDC2 controller through the ATS interface board on the transfer switch. Also see the Model RXT Transfer Switch Operation/Installation Manual for more information about transfer switch operation.

The controller must be in AUTO mode for automatic transfer switch operation.

Automatic Start

The RDC2 controller receives utility source voltage sensing data from the Model RXT transfer switch.

1. If the utility source voltage falls below an acceptable level, the controller starts the engine start time delay.
2. If the utility source is not restored before the time delay expires, the generator set starts.
3. After the Normal-to-Emergency time delay, the ATS is signaled to transfer the load to the emergency source.

Automatic Stop with Engine Cooldown

1. When the utility source is restored, the Emergency-to-Normal time delay starts.
2. When the Emergency-to-Normal time delay expires, the load is transferred to the utility.
3. The generator set runs through the engine cooldown cycle and then stops.

2.3.7 Automatic Operation with Other Transfer Switches

If a transfer switch other than the Model RXT (such as a Kohler Model RDT) is used, the engine start contacts from the ATS must be connected to engine start leads 3 and 4 on the generator set.

The controller must be in AUTO mode to respond to remote start/stop signals from an ATS or remote switch.

Press the AUTO button to put the controller into automatic mode.

Automatic Start

The engine start contacts on the ATS close to signal the generator set to start, and remain closed while the generator set is running.

Automatic Stop

The engine start contacts on the ATS open to signal the generator set to stop.

2.4 Exercise

The RDC2 controller can be set to automatically run the generator set at the same time and day each week. Exercising the generator set weekly or every two weeks is required to keep the engine and alternator in good operating condition.

Three exercise modes are available: unloaded cycle, unloaded full speed, and loaded full speed. See Sections 2.4.2 through 2.4.4 for information about the exercise modes. A loaded exercise can be set at the RDC2 controller only if a Model RXT transfer switch is connected.

Note: With transfer switches other than the Model RXT, it is possible to have two exercise settings (one unloaded exercise set at the generator set controller, and another exercise set at the ATS controller). If the exercise times overlap, the ATS exercise setting takes priority.

If a transfer switch other than the Model RXT is used, refer to the instructions provided with the transfer switch to set a loaded exercise at the ATS, if desired.

2.4.1 Setting the Exerciser

When power is applied to the RDC2 controller (that is, when the battery is connected), you will be prompted to set the date and time, select a language, and then to set the exerciser.

The first setting will flash. Press the Up and Down arrow buttons to change the setting. Press Select to save the setting and move on to the next. See Section 3.5 for more detailed instructions to change settings on the RDC2. See Section 3.6 for more detailed instructions to set the exerciser or change the exercise settings.

2.4.2 Unloaded Cycle Exercise with Complete System Diagnostics

An unloaded exercise runs the generator set without signalling the transfer switch to transfer the electrical load from the utility source to the generator set. The Unloaded Cycle exercise with diagnostics is the recommended exercise mode and is the default exercise setting.

The Unloaded Cycle exercise runs the engine for 20 minutes in the cycle shown in Figure 2-1 and described below.

- Runs at reduced speed for 10 minutes to warm up and exercise the engine.
- Ramps up and runs at full speed for 3 minutes. Engine diagnostics are performed during this full-speed portion of the cycle, which provides the best test of engine and alternator power backup capability. Diagnostic tests at full speed can identify potential problems with the power output and alert the operator before an emergency event.
- Ramps down and runs at reduced speed for 5 minutes to cool down the engine before shutting down automatically.

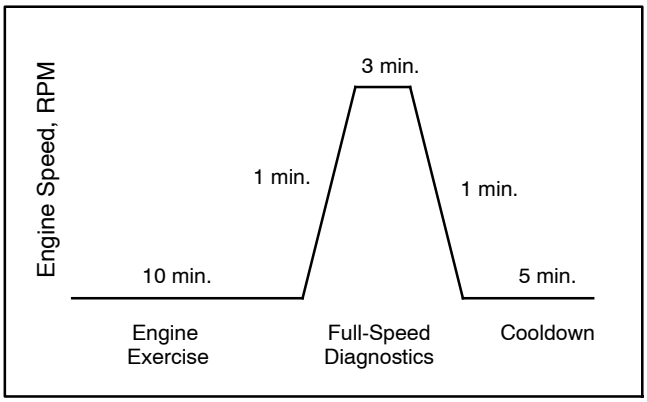

Figure 2-1 Unloaded Exercise Cycle

System Diagnostics

During the unloaded exercise, the controller monitors the following data. The controller display indicates that the generator set is running, unless a fault is detected as described below.

- **ATS connection.** The controller verifies that the Model RXT ATS interface board is connected.

- **Battery voltage.** Battery voltage is checked before exercise to verify engine starting capability. Battery voltage provides a measurement of battery health. If the controller detects low battery voltage, the condition is indicated on the display.

- **Communication integrity tests.** J1939, RBUS, Ethernet, and USB are monitored for messages indicating that the controller and wiring are reliable.

- **Engine speed.** Engine speed is measured at reduced speed and full speed. An overspeed or underspeed condition will result in a fault condition and shutdown.

- **Generator output frequency and voltage.** Operating the generator at full speed allows the RDC2 controller to check the output power for correct voltage, frequency, and stability. When the engine is running at full speed, the controller verifies that the voltage and frequency are within acceptable limits. A fault message is displayed if the voltage or frequency is out of range.

- **Oil pressure.** Oil pressure is verified to ensure proper lubrication of critical engine components. Pressure is monitored at both reduced and full speeds. If the oil pressure is low, the Low Oil Pressure message is displayed and the generator set shuts down.

2.4.3 Unloaded Full-Speed Exercise

The unloaded full-speed exercise runs the generator set at full speed for 20 minutes without transferring the load.

To set an unloaded full-speed exercise, follow the procedure in Figure 3-8 and select Exercise Mode: Unloaded Full.

2.4.4 Loaded Full-Speed Exercise (with RXT only)

A loaded exercise starts the generator set, ramps up to full speed, and then transfers the electrical load from the utility source to the generator set. After 20 minutes, the load is transferred back to the utility source. The engine runs without load for 5 minutes or until cool, and then shuts down automatically.

Note: With a loaded exercise, power to the building is lost for up to 10 seconds during load transfer.

For a loaded exercise controlled by the RDC2 controller, a Model RXT transfer switch must be connected to the generator set. To set a loaded exercise, follow the procedure in Figure 3-8 and select Exercise Type: Loaded.

For a loaded exercise with a transfer switch other than a Kohler® Model RXT, program the exercise at the transfer switch controller. Refer to the transfer switch operation manual for instructions.

2.4.5 Power Failure During Exercise Cycle

If the utility power is lost during an unloaded exercise, the ATS transfers to the emergency source, the exercise is ended and the control remains in the AUTO mode.

If the utility power is lost during a loaded exercise, the exercise is ended. The ATS remains in the emergency position and the control goes into the AUTO mode.

The generator set continues to run and supply power to the load for the duration of the utility power outage. When Utility power is restored, the ATS will re-transfer to the utility source through normal timing sequences.

2.5 Faults

The RDC2 controller displays fault messages for generator set warnings and shutdowns. Selected fault messages are shown in Figure 2-3. Contact an authorized distributor/dealer for service, if necessary.

2.5.1 Warnings

The controller displays a fault message but the generator set does not shut down on a warning. The controller resets automatically after a warning condition is corrected.

2.5.2 Shutdowns

Under a fault shutdown condition, the generator set shuts down automatically and the controller displays a fault message. The OFF LED flashes. In some cases, the engine cooldown cycle runs before the engine shuts down. See Figure 2-3.

Shutdown switches (such as the low oil pressure switch or high engine temperature switch) on the generator set will automatically reset when the problem is corrected. However, the fault condition at the controller does not clear until the controller is reset.

The generator set cannot be restarted until the fault condition is corrected and the controller is reset. See Section 2.5.4 for instructions to reset the controller after a fault shutdown.

2.5.3 ATS Communication Errors

When a Model RXT transfer switch is used, an ATS fault indicates that the connection to the interface board on the transfer switch has been lost. Check the connection to the ATS interface board.

2.5.4 Resetting the Controller after a Fault Shutdown

Always identify and correct the cause of a fault shutdown before resetting the controller. Check the fault message displayed on the controller and refer to Figure 2-3 to identify and correct the fault condition before proceeding. Contact an authorized distributor/dealer for service, if necessary.

RDC2 Controller Reset Procedure

Press the OFF button to reset the controller, or follow the procedure below. See Figure 2-2.

1. While the fault message is displayed, press the Select button to go to the Overview menu.
2. Press Select again. The active fault message is displayed.
3. Press Select. Confirm Clear Fault: NO is displayed.
4. Press the Up arrow button. Confirm Clear Fault: YES is displayed.
5. Press the Select button to enter YES and clear the fault.
6. Press the Select button to return to the overview menu. The controller changes to OFF mode.
7. Press AUTO to put the generator set into automatic mode.

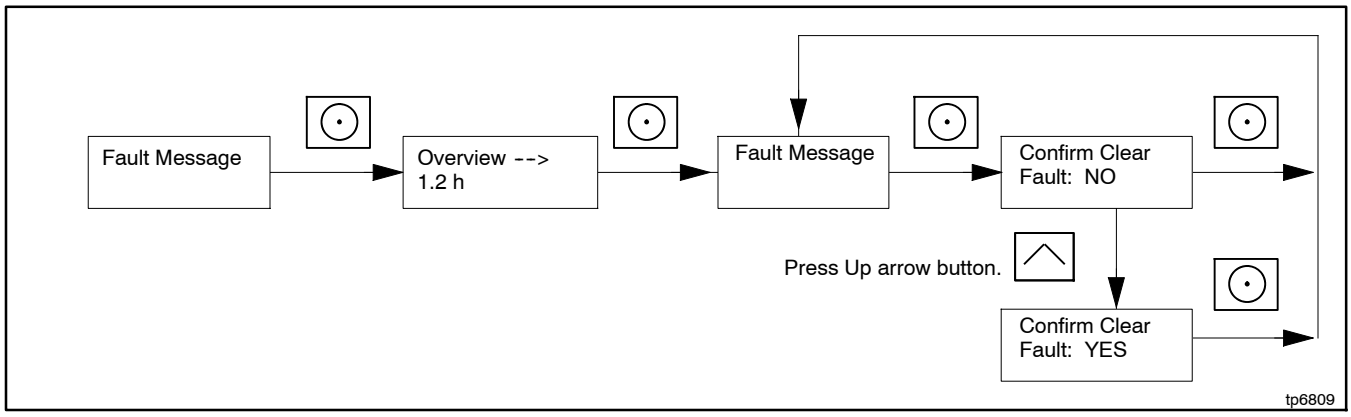

Figure 2-2 Clearing a Fault on the RDC2 Controller

Fault Message	Warning (W) or Shutdown (SD)	Condition	Check
AC Sens Loss	W (1 sec.) SD (3 sec.) *	AC sensing lost. In Auto mode, generator output AC sensing is lost. Detection begins10 seconds after crank disconnect. Warning: after 1 second if no output detected after crank disconnect. Shutdown: after 3 seconds if voltage was present and then lost.	Contact an authorized distributor/dealer for service.
Accy PwrOver Warning	W	Accessory Power Overload. An over current fault (short circuit) on the accessory controller power output.	Contact an authorized distributor/dealer for service.
ATS ComError	W	ATS communication error. Warning is displayed if ATS interface connection is lost. See Section 2.5.3.	Check communication wiring between transfer switch interface board and generator set.
ATS PhaseRot	W	ATS phase rotation mismatch. Transfer switch phase rotation does not match, ATS will not transfer.	Correct the ATS connection. Refer to the ATS Installation manual, wiring diagrams, and labels on the transfer switch.
Aux Input	SD *	Auxiliary input. An optional customer-connected input is closed. (Digital input from optional PIM.)	Check customer-supplied equipment.
Batt Chg Flt	W	Battery charger fault. Input to PIM from an external battery charger (not the built-in battery charger).	Check external battery charger.
Battery CrLo Warning	W	Engine starting battery voltage falls below 11 VDC for more than 10 seconds. Inhibited during the engine crank cycle. Clears when the battery voltage returns to an acceptable level.	Check the battery rating and condition. Check the battery charger operation. Charge or replace the battery.
Battery High	W	Engine starting battery voltage rises above 16 VDC for more than 10 seconds. Inhibited during the engine crank cycle. Clears when the battery voltage returns to an acceptable level.	Check the battery rating and condition. Check the battery charger operation.
Battery Voltage Low	W	Engine starting battery voltage falls below 12.5 VDC for more than 90 seconds when the engine is not running. Not operative during the engine crank cycle. Clears when the battery voltage returns to an acceptable level.	Check the battery rating and condition. Check the battery charger operation. Charge or replace the battery.
Eng Speed High	SD *	Engine speed exceeds 115% of the normal running speed for more than 0.3 seconds.	Contact an authorized distributor/dealer for service.
Eng Speed Low	SD *	Engine speed drops below 85% of the normal running speed for more than 3 seconds.	Reduce the load. Model 20RCA/20RCAL only: Check enclosure thermostat and reset if tripped. See Section 5.5. Contact an authorized distributor/dealer for service.
Exer Not Sch	W	Exercise not scheduled. No exercise is scheduled on the controller.	See Section 3.6 for instructions to set the exerciser.
Frequency High	SD *	Governed frequency exceeds 110% of the system's frequency setpoint for more than 10 seconds. Function becomes active 10 seconds after engine start (10 second inhibit).	Contact an authorized distributor/dealer for service.
* Engine cooldown runs before shutting down.			

Fault	Warning (W) or Shutdown (SD)	Condition	Check
Frequency Low	SD *	Governed frequency falls below 90% of the system frequency setting for more than 10 seconds, or 1 Hz below the system frequency setting for more than 60 seconds. Function becomes active 10 seconds after engine start (10 second inhibit).	Reduce the load and restart the generator set. Model 20RCA/20RCAL only: Check enclosure thermostat and reset if tripped. See Section 5.5. Contact an authorized distributor/dealer for service.
Lo Crank Vlt	W	Low cranking voltage. Battery voltage dropped below 3.5 VDC during engine cranking.	Charge or replace the battery.
Locked Rotor	SD	No engine rotation is sensed during cranking. Shuts down 3 seconds after the fault is detected.	Check the battery. Check for loose connections. Contact an authorized distributor/dealer for service.
MainPwrOverL	SD	Main power overload. An over current fault on the 70 controller power output (short circuit).	Contact an authorized distributor/dealer for service.
Not in Auto	W	The generator set is not in Automatic (standby) mode. Remote start and stop commands from a transfer switch or remote switch will be ignored.	Press AUTO to place the generator set in Automatic mode, when appropriate.
Oil Press Low	SD *	The LOP switch indicates low oil pressure for more than 5 seconds. Function becomes active 30 seconds after crank disconnect (30 second inhibit). **Note:** The low oil pressure shutdown does not protect against low oil level. Check the engine oil level regularly as recommended in Section 4.	Check for leaks in the lubrication system. Check the oil level and add oil if the level is low. Check the oil pressure switch and wiring.
Over Crank	SD	Three unsuccessful starting attempts.	Check the fuel supply, spark plug, and battery. Check for loose connections. Contact an authorized distributor/dealer for service.
Spd Sens Flt	SD	Engine speed sensor has failed or engine stalled.	Contact an authorized distributor/dealer for service.
Volts L1-L2 High	SD *	Generator voltage high. Output voltage exceeds 120% of the system nominal voltage for more than 2 seconds.	Contact an authorized distributor/dealer for service.
Volts L1-L2 Low	SD *	Generator voltage low. Output voltage falls below 80% of the nominal system voltage for more than 10 seconds.	Reduce the load and restart the generator set. Model 20RCA/20RCAL only: Check enclosure thermostat and reset if tripped. See Section 5.5. Contact an authorized distributor/dealer for service.
* Engine cooldown runs before shutting down.			

Figure 2-3 Controller Fault Messages

2.5.5 Faults Related to Paralleling

If the PowerSync® Automatic Paralleling Module (APM) is used with two 14 kw or two 20 kW generator sets, additional faults and events related to the paralleling system may be displayed on the controller and/or in OnCue Plus. This section lists those faults and events.

See the installation instructions provided with the APM for additional paralleling information.

Note: Contact an authorized distributor or dealer for paralleling system installation, startup, troubleshooting, or service.

Fault Text	Description	When Active	Warning Delay, sec.	Display Cleared On
Current A High Warning	Over Current	Paralleled	10	Press AUTO or OFF *
Frequency High Warning	Over Frequency	Paralleled	10	Press AUTO or OFF *
Frequency Low Warning	Under Frequency	Paralleled	10	Press AUTO or OFF *
Reactive Power Low Warning	Loss of Field	Paralleled	10	Press AUTO or OFF *
Real Power High Warning	Over Power	Paralleled	10	Press AUTO or OFF *
Real Power Low Warning	Reverse Power	Paralleled	10	Press AUTO or OFF *
Voltage L1-L2 High Warning	Over Voltage	Paralleled	10	Press AUTO or OFF *
Voltage L1-L2 Low Warning	Under Voltage	Paralleled	10	Press AUTO or OFF *
* Pressing OFF will stop the generator set.				

Figure 2-4 Warning Messages (protective relay disconnect)

Fault Text	Description	Possible Causes *
BusDeadLive	The bus is measured to be dead when one of the generators is supposed to be supplying voltage to the bus (closed contactor)	Bus metering V9A and V9B connections to V9 of paralleling protection harness are connected incorrectly.
BusLiveDead	The bus is measured to be live when no generators are connected to it (both contactors open).	Bus metering V9A and V9B connections to V9 of paralleling protection harness connected incorrectly.
CfgModelNum	The two generators that are intended to be paralleled have incompatible model numbers.	Incorrect configuration of one of the generators. Different generator types. The paralleled generator sets must be the same kW model. (i.e. two 14 kW or two 20 kW models.)
CfgSysVolt	The system voltage of the two generators intended to be paralleled is not the same. Because the system does not know which voltage is correct, the generators will not be allowed to start.	One of the two generators is incorrectly configured. Intermittent connections on RBUS network wiring.
ChkngMeter	This generator has paralleled to the other generator and is verifying that the metering is connected and establishing the connection direction.	Status message appears the first time the two generators are paralleled.
ConCheckFail	Failure to Auto-Discover APM connections.	Wires 9A and 9B crossed between the generators. Wires 9A or 9B not connected
ConChecking	Performing APM connection auto-discovery.	This generator has started in RUN, the other generator is in OFF.
ConNotDeterm	APM connection auto-discovery is not complete. This means that the generator does not know which contactor is connected to it.	Generators not yet started in RUN with other generator in OFF. See the APM instruction sheet for instructions to perform the auto-discovery procedure.
ContactorOk	Successful auto-discovery of APM connections.	Auto-discovery was activated by placing other generator in OFF and this generator in RUN.

Fault Text	Description	Possible Causes *
ErraticSig	The power metering on this controller gives a signal that is not consistent with the system configuration. Reversing the power direction does not resolve the problem.	Bad wiring to the CT. Too much tension on wires from the CT to the controller.
LossOfComAPM	The Automatic Paralleling Module has stopped communicating on RBUS. (An APM was detected on the RBUS network but is no longer communicating.)	APM is unplugged. Primary controller is powered down. Check the battery connections. See previous page for more information. Intermittent connections on RBUS network wiring. Check RBUS communication connections.
LossOfComm2	The primary controller has lost communication with the secondary controller. (A secondary controller was detected, then communication was lost.)	RBUS disconnected, secondary controller battery disconnected, updating firmware in secondary controller, or intermittent RBUS connections.
LossOfField	This generator has absorbed more than 25% reactive power (magnetic excitation current) for 20 seconds	Generator voltage on this generator is not calibrated correctly. Generator voltage on other generator is not calibrated correctly. Bus voltage on this generator is not calibrated correctly. Bus voltage on the other generator is not calibrated correctly.
MeteringOk	The generator has verified that the metering is connected correctly and that the direction is consistent with expected power direction.	Status message indicates that the CT is connected to the generator correctly.
MeterUnknown	This generator does not know if the metering is connected or the orientation of the connection. This means that the generators can't share load accurately until this information is known.	System commissioning and startup not yet complete. See the APM instructions.
NoCurrent	The generator has applied load (using the other generator) and has observed no current on the power sensing inputs.	The CT is not connected to the controller. The output leads from the generator do not go through the CT in the correct direction. See the APM instructions.
SyncFailure	The generator has been attempting to synchronize for over 2 minutes without success.	Generator is hunting. Advanced speed control settings need adjustment. Load is changing frequently to disturb the online generator.
* For paralleling system troubleshooting and service, contact an authorized distributor or dealer.		

Figure 2-5 Events Related to Paralleling

Generator Set State	Description
Generator Management Off	This generator has been stopped by generator management because it is not presently needed to supply the load. The generator is available and will start if it is needed again.
ProtectiveRelayTrippedContactor	The contactor has been forced to open to protect one of the generators or the customer's load.
Synchronizing	The generator is actively trying to match frequency, voltage and phase with that of the paralleling bus.
Unloading	The generator is actively trying to transfer load from itself to the other generator.

Figure 2-6 Generator Set States Related to Paralleling

Notes

3.1 RDC2 Generator Set/Transfer Switch Controller

Model RCA and RCAL generator sets are equipped with the RDC2 generator set/transfer switch controller. See Figure 3-1 for controller illustrations.

The RDC2 controls the following power system components:

- Model RCA or RCAL generator set
- Model RXT Automatic Transfer Switch (ATS)
- Load management device
- Programmable Interface Module (PIM)

The RDC2 controller features include:

- Two-line x 16 character backlit digital display with adjustable contrast
- OFF, AUTO, and RUN generator set master control buttons
- Generator set status indicating LEDs (OFF, AUTO, RUN)
- Up, Down, and Select buttons for navigation through menus and adjustments
- Power system indicator LEDs to show utility and generator source status, and to show which source (utility or generator) is supplying power to the load (Model RXT automatic transfer switch is required for operation of these LEDs.)

3.2 Controls and Indicators

Figure 3-1 illustrates the RDC2 controller. See Figure 3-2 for details of the controller's user interface.

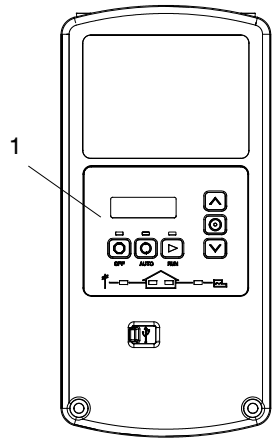

1. User Interface; see Figure 3-2

Figure 3-1 RDC2 Controls and Indicators

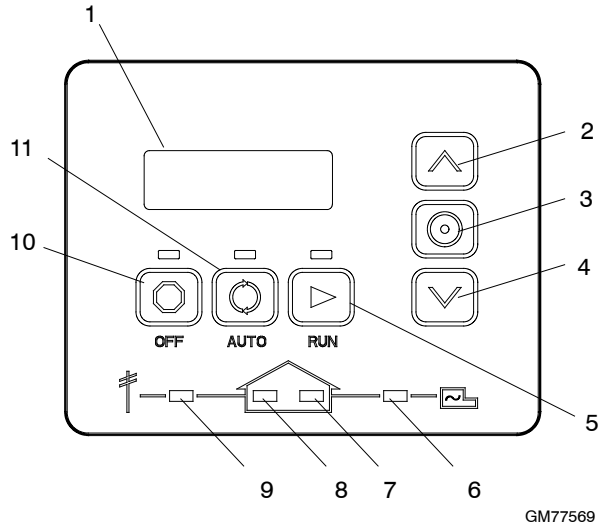

1. 2-line LCD display
2. Up button
3. Select button
4. Down button
5. RUN button and LED
6. Generator power available LED*
7. Building on generator power LED*
8. Building on utility power LED*
9. Utility power available LED*
10. OFF button and LED
11. AUTO button and LED

* These LEDs operate only if a Model RXT automatic transfer switch is connected.

Figure 3-2 RDC2 User Interface

3.2.1 Controller Keypad

The RUN, OFF, and AUTO buttons control the generator set as described in Figure 3-3.

Use the Select, Up arrow, and Down arrow buttons to navigate through the menus and change settings, if necessary. See Section 2.3 for operation instructions.

3.2.2 LED Indicators

LEDs above the RUN, OFF, and AUTO buttons indicate the mode of operation as shown in Figure 3-4.

Power System LEDs indicate the status of the utility power and the generator set, and indicate which source is supplying power to the building (based on the position of the RXT transfer switch). See Figure 3-2 and Figure 3-4.

Note: The power system LEDs operate only if a Model RXT transfer switch is connected.

Button	Button Function
RUN	Starts the generator set. The engine start time delay is ignored.
OFF	Stops the generator set. The cooldown time delay is ignored. During the engine crank cycle, pressing OFF will stop the crank cycle. Press OFF to clear faults and reset the controller.
AUTO	Places the generator set in Automatic (standby) mode.
Down arrow	Use to navigate through menus and change settings. This manual contains instructions to navigate the controller menus and adjust settings on the RDC2 controller.
Select	
Up arrow	

Figure 3-3 RDC2 Controller Pushbutton Operation

LED	LED Operation
RUN	Lights when the generator set has been started locally by pressing the RUN button. Remote start and stop commands are ignored.
OFF	Lights for 2 seconds, then flashes every 2 seconds when the generator set and controller are off. Remote start/stop commands have no effect. The exercise cycle will not run.
	In Auto mode, OFF LED flashes quickly to indicate a fault shutdown. Attention required. Identify and correct the fault condition before resetting the controller.
AUTO	Lights when the generator is in automatic (standby) mode. Generator set will respond to engine start and stop commands from the controller (for example, exercise start and stop commands) or an ATS. Time delays operate as described in Section 2.3.
Utility Power Available *	Lights when utility power is available.
Building on Utility Power *	Lights when the building load is connected to utility power through the RXT transfer switch.
Generator Power Available *	Lights when generator power is available.
Building on Generator Power *	Lights when the building load is connected to generator power through the RXT transfer switch.
* These LEDs operate only if a Model RXT transfer switch is connected.	

Figure 3-4 RDC2 Controller LED Operation

3.2.3 LCD Display

The controller is equipped with a two-line x 16 character backlit digital display with adjustable contrast. When the generator is running, the controller automatically scrolls through the displays shown in Figure 3-5. When the system is in AUTO, the screens shown in Figure 3-6 are displayed.

When a fault or warning condition exists, the controller will show the corresponding message. See Section 2.5 for more information about faults.

Controller menus display power system information, including status information for the engine, generator, and optional RBUS accessories, exercise settings, and event history. Some menus allow changes to the controller settings. See Sections 3.7 through 3.21 for menu diagrams.

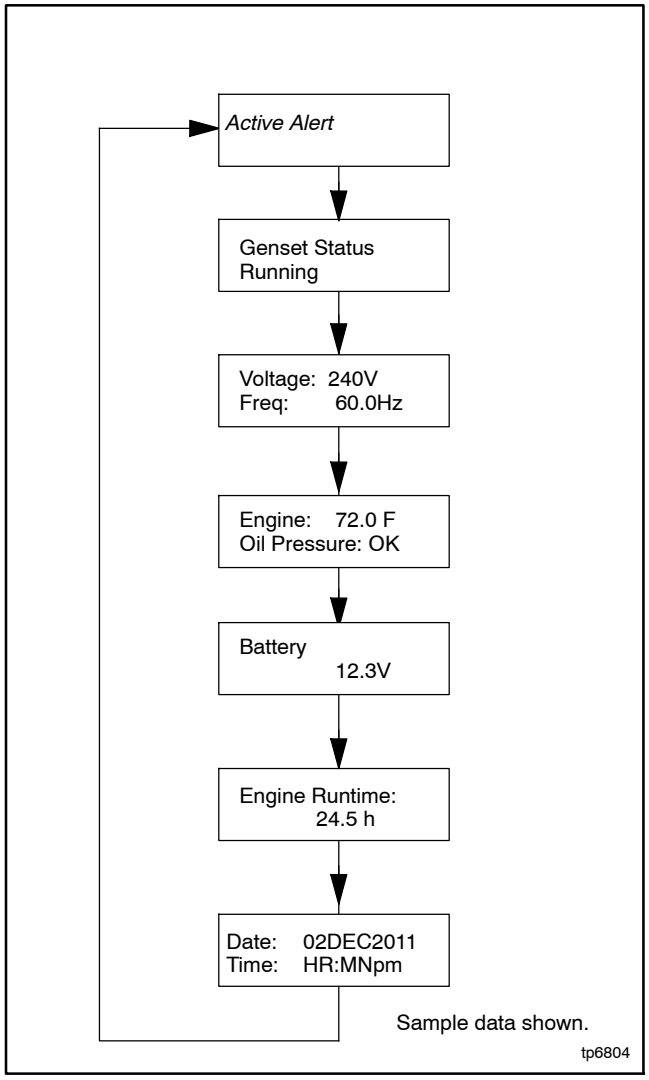

Figure 3-5 Autopaging Displays, Generator Running

The display contrast is adjustable. Navigate to the Genset System menu and step down to the Contrast screen. Press the Select button, and then use the up and down arrow buttons to adjust the contrast. See Section 3.5, Changing Settings, and Section 3.14, Genset System Menu.

The display backlight turns off after about a minute of no activity. The backlight turns on when a button is pressed or when the generator set starts.

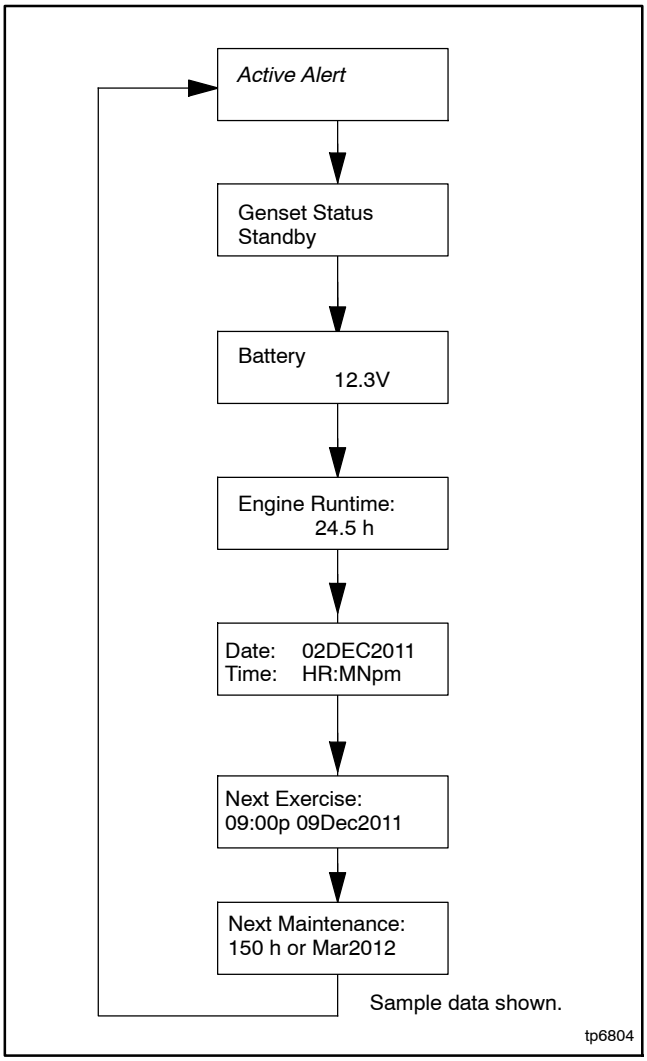

Figure 3-6 Autopaging Displays, Automatic Mode

3.3 Controller Power

The RDC2 controller is powered by the generator set engine starting battery and the built-in battery charger.

Note: To disconnect controller power, disconnect the utility power to the generator set *and* disconnect the battery.

If controller power is disconnected and reconnected, you will be prompted to set the language, time, date, and exerciser. The first setting will flash. Press the Up and Down arrow buttons to change the setting. Press Select to save the setting and move on to the next. Repeat until all settings are saved and the controller returns to the main menu. See Section 3.5 for more detailed instructions to change settings on the RDC2. See Section 3.6 for more detailed instructions to set the exerciser or change the exercise settings.

3.4 Battery Charging

The controller includes a built-in battery charger to maintain the engine starting battery. The RDC2 controller monitors the battery voltage and provides a constant 13.4 ±2% VDC voltage and maximum 2.5 amps to charge the battery.

The installer must connect utility power provided from the building on a breaker-protected circuit for the built-in battery charger as described in the generator Installation Manual.

3.5 Changing Settings

Some settings can be changed from the controller keypad. The controller settings and generator set output are factory-set and should not require field adjustment under normal circumstances. Check and adjust the settings and/or output when:

- The controller has been replaced.
- The voltage requires adjustment for a particular application.
- Troubleshooting generator set problems.

Have controller setup and adjustment performed only by an authorized distributor/dealer or authorized representative.

The following procedure explains how to change settings. See Figure 3-7 for an example using the Date and Time settings.

Note: Use caution when navigating the controller menus. In some menus, pressing the Select button can enable editing of the controller settings. Changing the settings to incorrect values can adversely affect generator set operation or render the unit inoperable.

Procedure to Change Settings

1. Press the Select button to enter the main menu.
2. Press the down arrow button until the desired menu is displayed. The Genset System menu is used for this example. See Figure 3-9.
3. Press the Select button to enter the genset system displays. See Figure 3-7.
4. Press the down arrow button to step through the generator set system settings.
5. To change any of the genset system settings, press the Select button. The selected setting flashes.
6. Press the up or down arrow buttons to increase or decrease the setting.
7. When the desired setting is shown, press Select. The value stops flashing. If there are additional adjustable settings on the screen, the next setting flashes. For example, in the date menu, the day, month, and year can be adjusted.
8. Repeat steps 6 and 7 for each setting on the screen.
9. Press the down arrow to step to the next screen.
10. To exit, press the down arrow button until Return is displayed. Press the Select button to exit the menu.
11. Press the AUTO or OFF button to exit the main menu.

Note: If no buttons are pushed, the controller exits the menus and returns to the generator set status display after 5 minutes.

Changing Settings on the RDC2 Controller

1. Press the Select button to enter the main menu.

Press: **Display:**

```
Overview -->
1.2 h
```

2. Press the down arrow button until the desired menu is displayed. See Figure 3-9. Date and Time are used for this example.

Press: **Display:**

```
Date     -->
and Time
```

3. Press the Select button to enter the Date and Time menu.

Press: **Display:**

```
Date:
05Dec2011
```

4. To change the date and time settings, press the Select button again. The year will flash.

Press: **Display:**

Date:
05Dec**2011**

5. Press the up or down arrow buttons to change the year.

Press: **OR** **Display:**

Date:
05Dec**2012**

6. When the correct year is shown, press the Select button. The year is saved and the next setting (month) flashes.

Press: **Display:**

Date:
05**Dec**2012

7. Repeat steps 5 and 6, using the arrow and select buttons to set the month and the date.

8. When the correct date is shown, press the Select button. The saved date is shown.

Press: **Display:**

```
Date:
03Jan2012
```

9. Press the down arrow button to step to the next menu.

Press: **Display:**

```
Time:
01:49pm
```

10. Repeat steps 5 and 6, using the arrow and select buttons to set and save the time.

Note: To change from am to pm, press the up arrow key to increase the hour until the correct hour and pm is displayed.

11. In the time format menu, press Select and then press the up or down arrow button to change the format, 12 hr. or 24 hr. Press Select to save the displayed format.

12. Press the down arrow button. Return is displayed.

Press: **Display:**

```
<-- Return
```

13. Press Select to return to the Date and Time menu.

Press: **Display:**

```
Date     -->
and Time
```

14. Press the Up or Down arrow buttons to step to a different menu.

15. Press Auto to signal the controller to exit the menus and return to the generator set status display.

Press: AUTO **Display:**

```
Genset State
Standby
```

Note: If no buttons are pressed, the controller returns to the status display after 5 minutes.

Figure 3-7 Changing Settings

3.6 Setting the Exerciser

Set the exerciser to automatically run the generator set for 20 minutes every week or every two weeks.

3.6.1 Setting the Exerciser at Controller Power-up

When battery power is connected to the controller, you will be prompted to set the language, date and time, and then to set the exerciser.

The first setting will flash. Press the Up and Down arrow buttons to change the setting. Press Select to save the setting and move on to the next. See Section 3.5 for more detailed instructions to change settings on the RDC2.

If the battery is disconnected and reconnected during generator set maintenance or service, the time, date, and exercise settings will need to be re-entered.

3.6.2 Changing the Exercise Settings

This section explains how to change the exercise settings after the initial setup.

Follow the procedure below and see the flowchart in Figure 3-8 to set the exercise time and date, mode, and frequency.

Procedure to Set the Exerciser

1. Press the AUTO button on the controller.
2. Press the Select button to go to the main menu. See Figure 3-9.
3. Press the down arrow button to step to the Genset System menu.
4. Press the Select button to enter the Genset system menu. See Figure 3-8.
5. Use the down arrow button to step to the Next Exercise menu. If the exerciser is not set, No Exercise Scheduled will be displayed.
6. Press and HOLD the Select button to enable editing.
7. Press the Select button. The setting flashes to show that it can be changed. For example, HR flashes to show that the hour can be changed.
8. Press the Up or Down arrow buttons to change the setting.
9. Press the Select button to save the setting and move to the next. For example, save HR setting and move to MN.
10. Repeat steps 5 through 9 to change the next item on the line until the desired settings are displayed.
11. Press Select to save after all settings have been selected. Settings will stop flashing.
12. If the generator set is connected to a Kohler® Model RXT transfer switch, the exercise can be changed to a loaded exercise. Set the Exercise Mode to Unloaded Cycle, Unloaded Full, or Loaded Full (RXT ATS required) as shown in Figure 3-8. Unloaded Cycle is recommended. See Sections 2.4.2 through 2.4.4 for information about the exercise modes.
13. Set the exercise frequency (weekly or every two weeks). Weekly exercises are recommended.
14. Press the down arrow button to step to the Return menu. Press the Select button to return to the main menu.

After a scheduled exercise run, the next exercise time and date will be updated automatically based on the Exercise Frequency setting.

Other transfer switches: For a loaded exercise with a transfer switch other than a Kohler® Model RXT ATS, refer to the transfer switch operation manual for instructions.

Exerciser Reset

To reset the exerciser to run at a different day and/or time or to change the exercise mode, follow the procedure in Section 3.6.2 to change the exerciser settings.

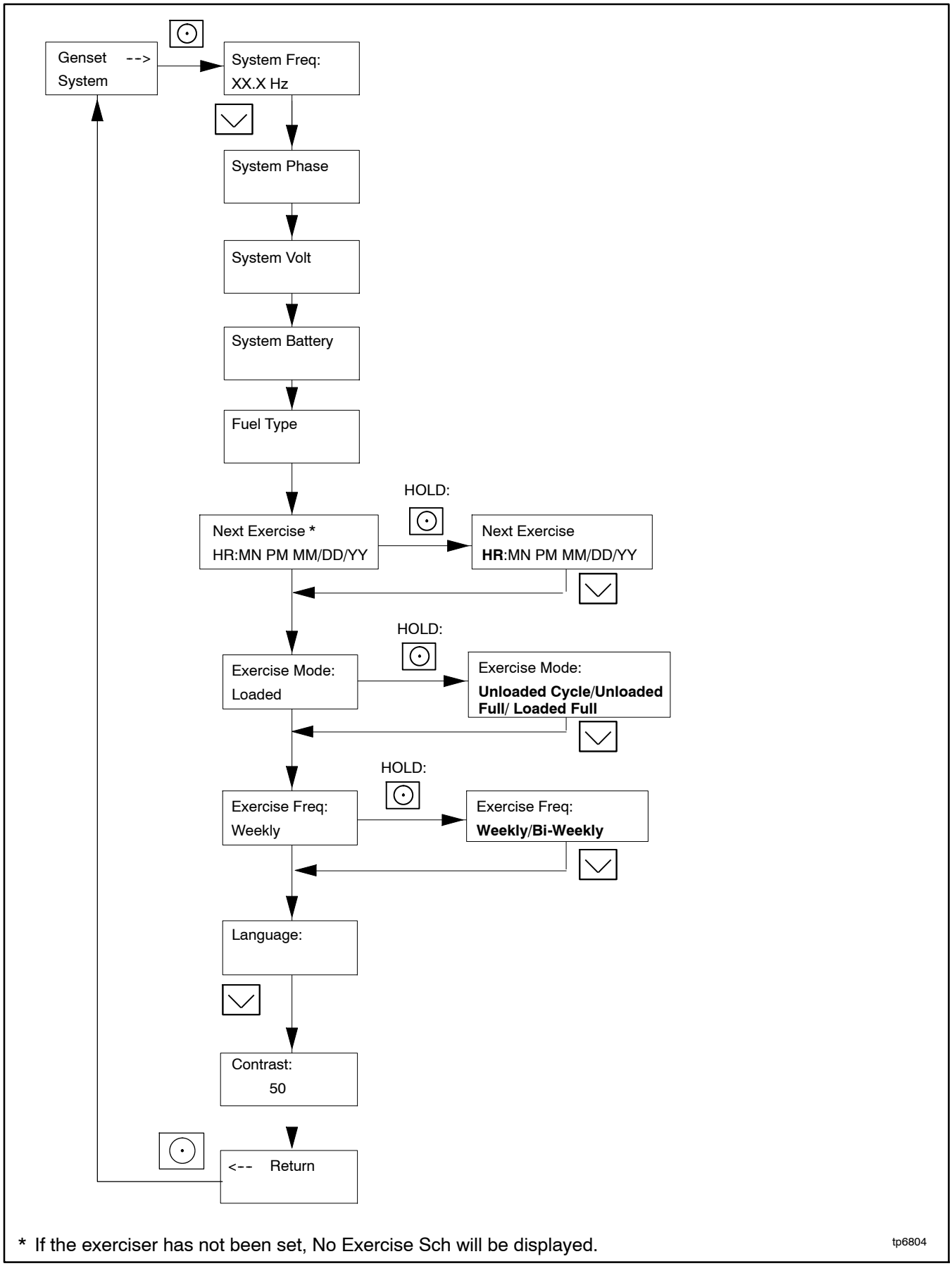

Figure 3-8 Procedure to Set the Exerciser on the RDC2 Controller

3.7 RDC2 Controller Menus

Controller menus display power system information, including status information for the engine, generator, and optional RBUS accessories, exercise settings, and event history. Some menus allow changes to the controller settings. Status information, including the engine runtime, cannot be changed by the operator.

Diagrams in the following sections show how to navigate through the menus. The diagrams show sample settings. Settings for your application may vary.

Note: Use caution when navigating the controller menus. In some menus, pressing the Select button can enable editing of the controller settings. Changing the settings to incorrect values can adversely affect generator set operation or render the unit inoperable.

If a setting on the controller display is flashing, edit mode has been enabled. Press the OFF or AUTO button to exit the edit mode.

3.8 Main Menu

Press the Select button once to bring up the main menu. Overview is displayed. See Figure 3-9. Press the down arrow button to step to the next menu, Engine Metering. Use the UP and DOWN arrow buttons to step up and down through the menus shown in Figure 3-9.

The controller will exit the main menu after 5 minutes if no buttons are pressed. To exit the main menu immediately, press the controller's OFF or AUTO button.

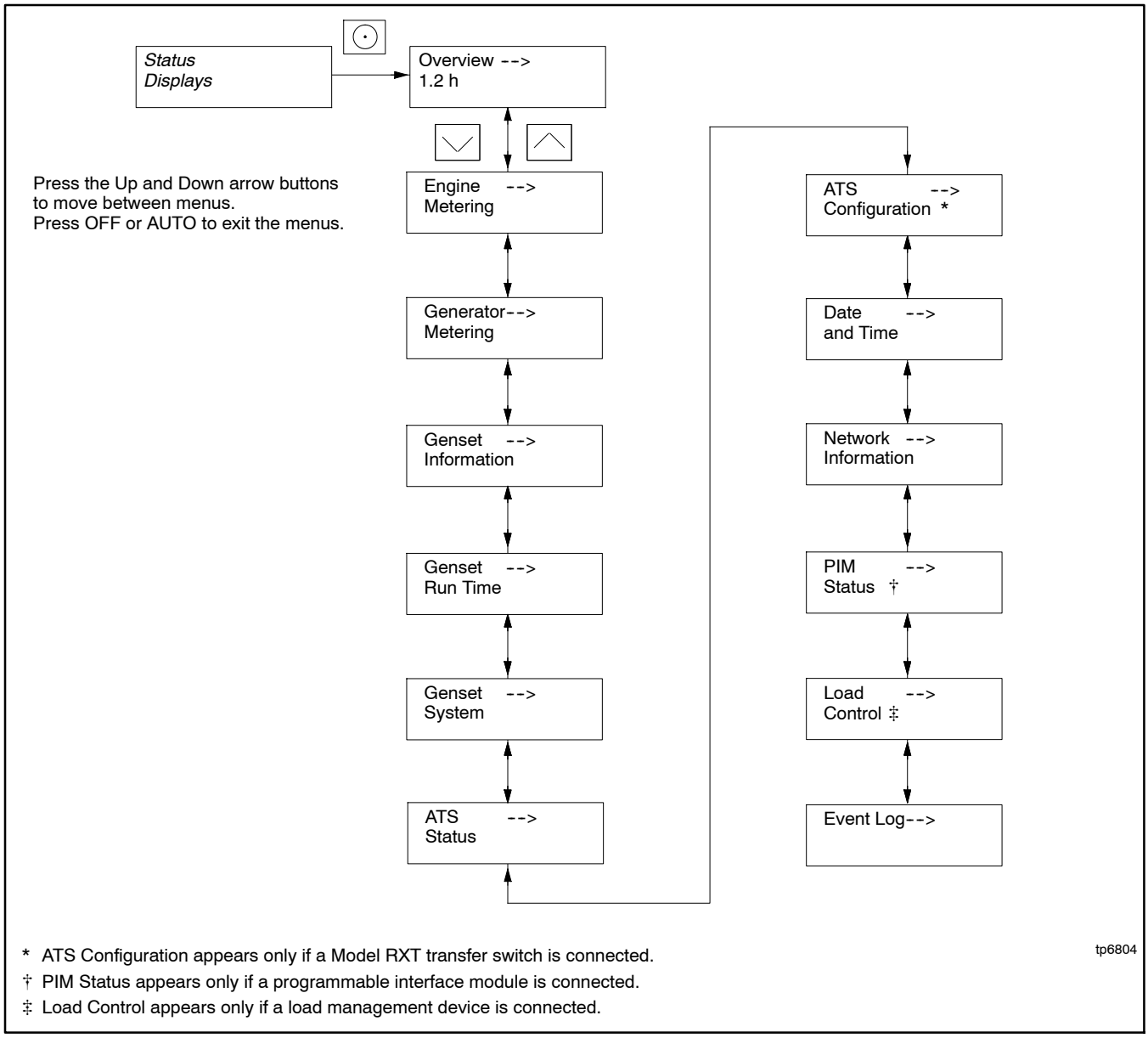

Figure 3-9 RDC2 Main Menu

3.9 Overview Menu

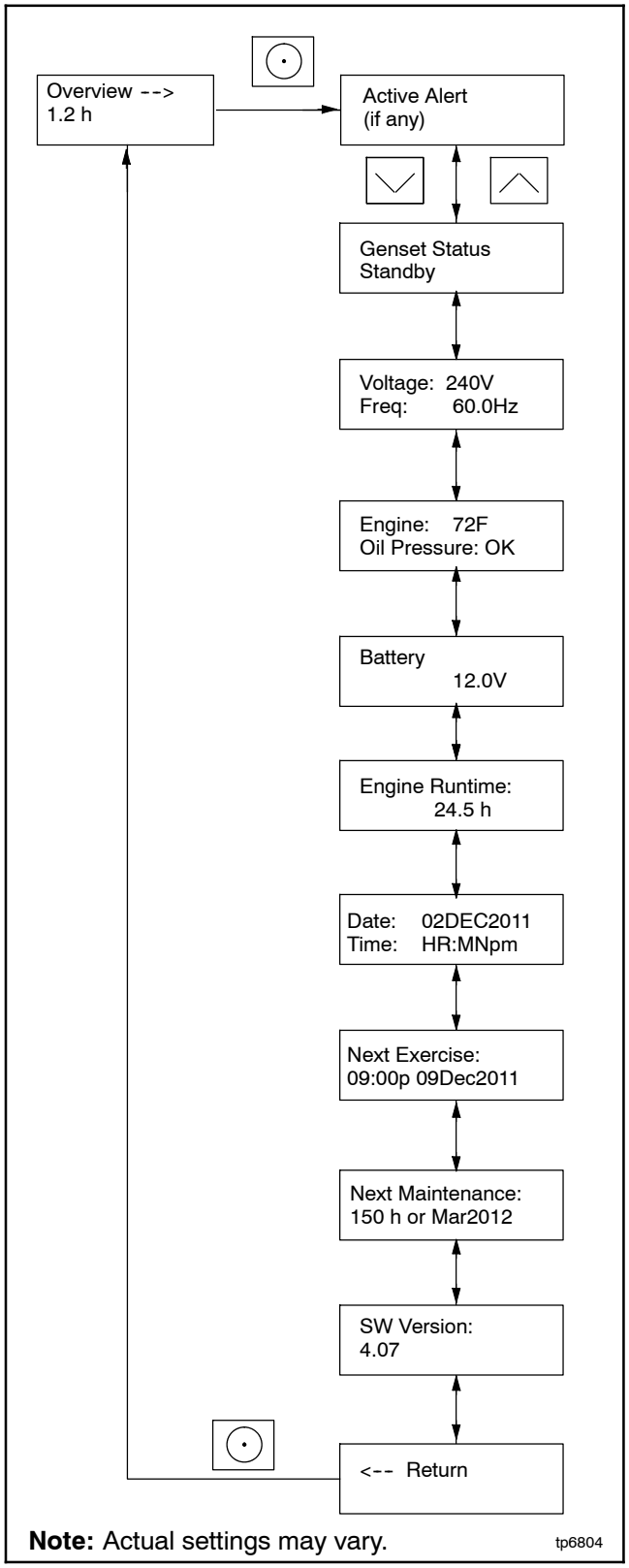

Figure 3-10 Overview Menu

3.10 Engine Metering Menu

The engine metering menu displays engine status information as shown in Figure 3-11. This menu displays status information only. No settings can be changed from this menu.

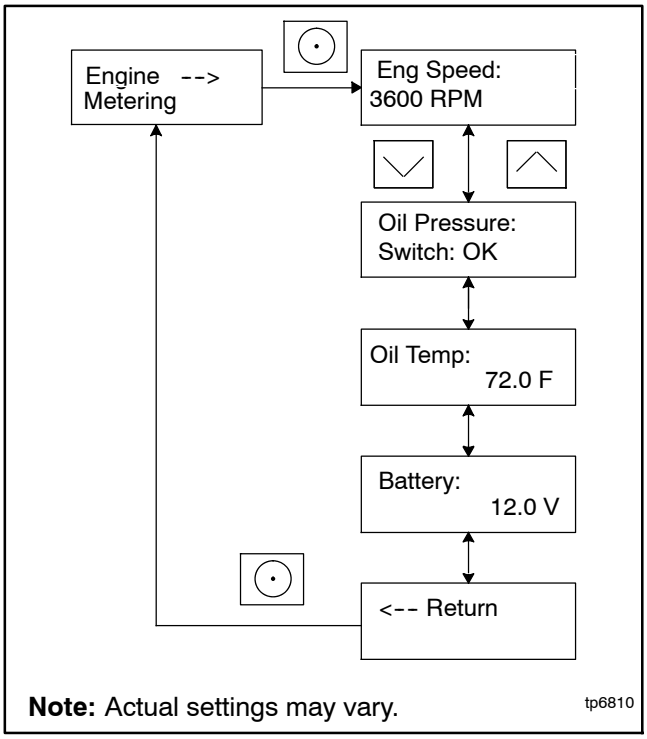

Figure 3-11 Engine Metering Menu

3.11 Generator Metering Menu

The generator metering menu displays the generator voltage and frequency. See Figure 3-12.

Voltage Calibration

DANGER

Hazardous voltage.
Will cause severe injury or death.

This equipment must be installed and serviced by qualified electrical personnel.

The voltage calibration mode can be entered from the Generator Metering menu. Contact a Kohler-authorized distributor/dealerdealer for service.

The Reset Calibration menu allows you to set the voltage reading back to the original value after calibration, if necessary. See Figure 3-12.

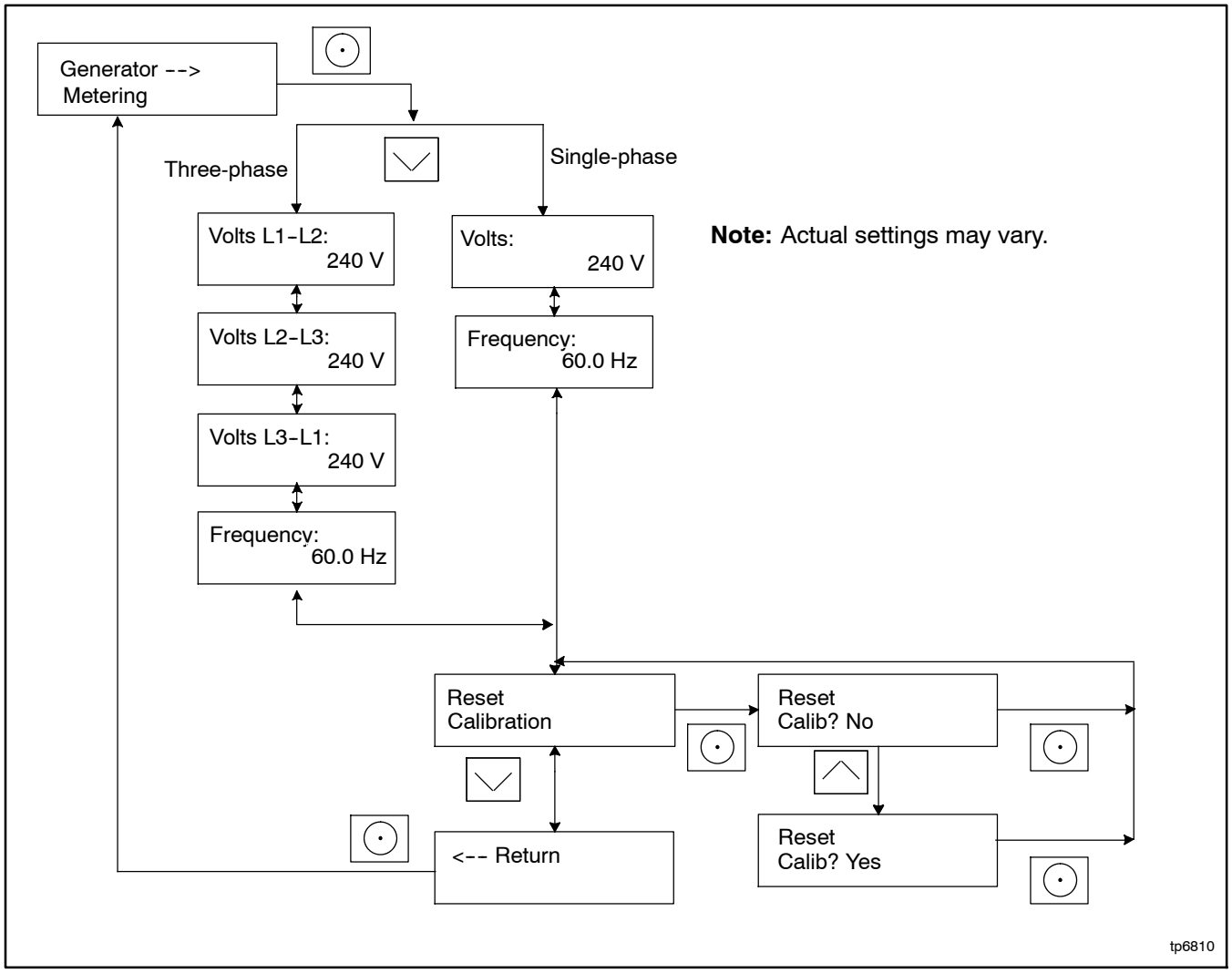

Figure 3-12 Generator Metering Menu

3.12 Generator Set Information Menu

The generator set model number and serial numbers are displayed. No changes are allowed from this menu.

Model and serial numbers are factory set and should not require changes in the field, except in the event that the controller is being replaced. A personal computer running Kohler SiteTech software is required to enter the generator set model number and serial numbers on a replacement controller. Contact an authorized Kohler distributor/dealer for service.

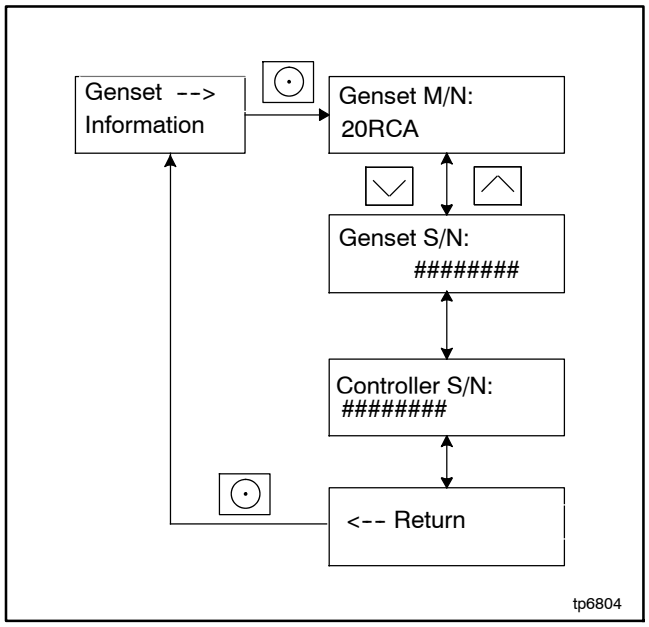

Figure 3-13 Generator Set Information Menu

3.13 Genset Run Time Menu

The data shown in Figure 3-14 are displayed. No changes are allowed from this menu.

Eng Runtime displays the total number of hours that the generator set engine has run. The runtime is not resettable.

The Next Maintenance menu shows the number of hours of generator set operation until maintenance is required. The estimated date for the next scheduled maintenance is also displayed. The maintenance reminder intervals are based on the engine manufacturer's recommendation for changing the oil. Refer to Section 4, Scheduled Maintenance, for maintenance instructions.

After changing the oil and performing other recommended maintenance, go to the Overview menu to reset the maintenance timer. See Section 4.2.5 for instructions to reset the maintenance timer.

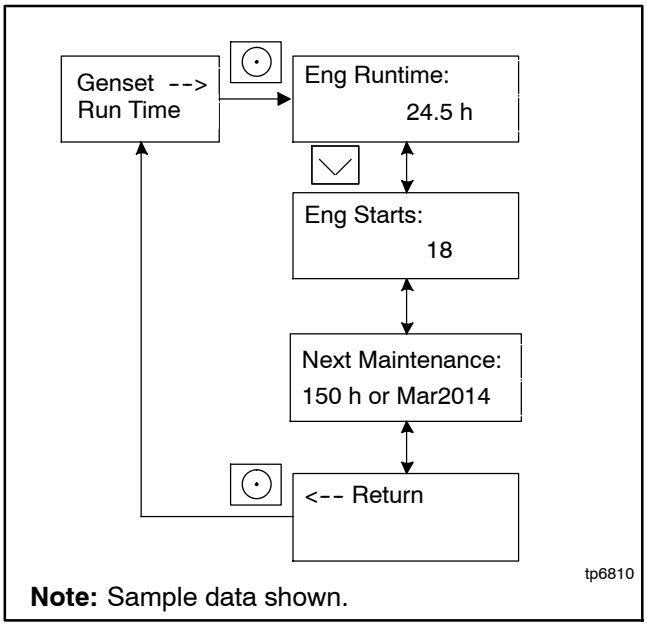

Note: Sample data shown.

Figure 3-14 Generator Set Run Time Menu

3.14 Genset System Menu

The genset system menu displays the system information shown in Figure 3-15. Generator sets are factory set and should not require changes to the system settings in the field.

A Kohler authorized distributor or dealer can adjust these settings, if necessary. If the generator set is reconnected to a different voltage or the system settings require adjustment for some other reason, see Section 3.5 for instructions to enable editing and change the system settings.

Note: Use caution when navigating the controller menus. In some menus, pressing the Select button can enable editing of the controller settings. Changing the settings to incorrect values can adversely affect generator set operation or render the unit inoperable.

Voltage Regulator (VR) Voltage Adj

The generator set voltage is factory set and typically does not require adjustment in the field. If voltage adjustment is required, contact a Kohler authorized distributor or dealer for service. Refer to the generator set Installation Manual for instructions to adjust the voltage.

Fuel Type

The fuel type, LP or natural gas, is shown. Do not change the fuel type in this menu unless the generator's fuel system has been converted by an authorized distributor or dealer.

Setting the Exerciser

Use the Genset System menus to set the generator set exerciser. Refer to Section 2.4 for instructions to set the exerciser and for more information about exercising the generator set.

After a scheduled exercise run, the Next Exercise time and date will be updated automatically based on the Exercise Frequency setting.

Language

Controllers can be set for the following languages: English, French, Spanish, Dutch, or German.

Adjusting the Display Contrast

To adjust the display contrast, use the down arrow button to step to the Contrast menu. Press the Select button, and then use the up and down arrow buttons to adjust the contrast. Press the Select button to save the contrast setting.

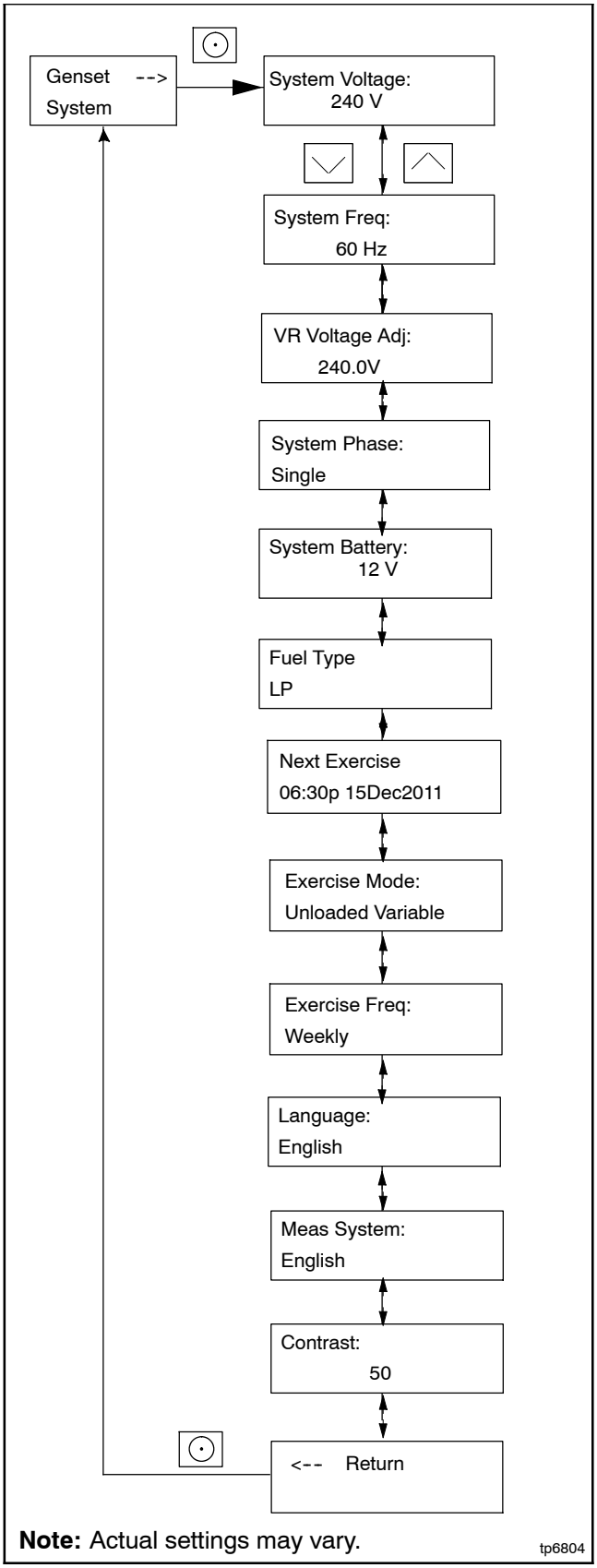

Figure 3-15 Genset System Menu

3.15 ATS Status Menu

ATS menus appear if a Model RXT transfer switch is connected to the generator set. If no transfer switch is connected, or another model ATS is connected to the engine start connections, Remote ATS is displayed on the ATS Status screen.

The ATS Status menu displays Model RXT transfer switch and source information.

The voltage shown in these menus can be calibrated. Follow the safety precautions at the beginning of this manuals. Use a voltmeter to measure the line-to-line voltage and follow the instructions in Figure 3-16 to calibrate the voltage readings.

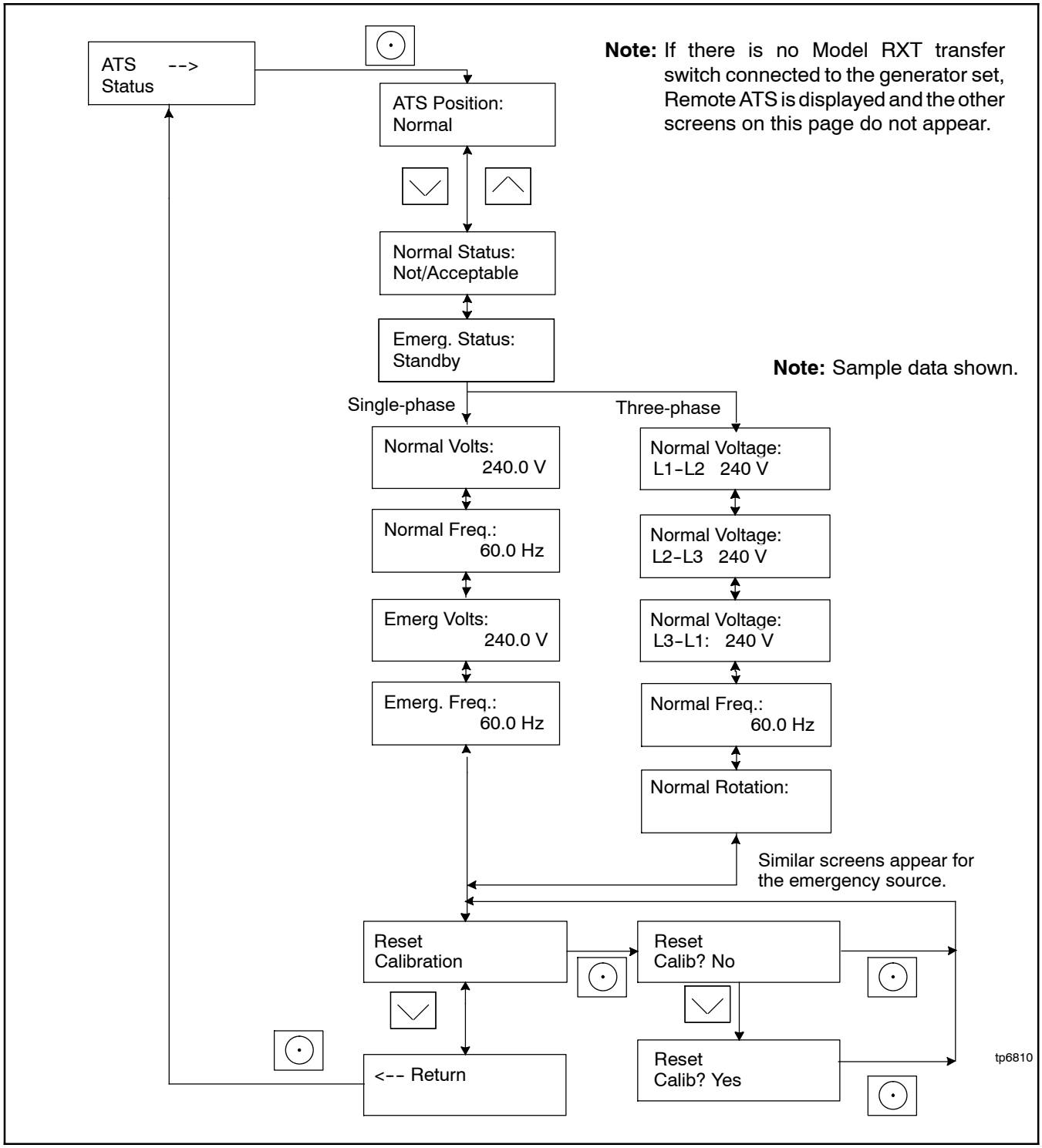

Figure 3-16 ATS Status Menu, with Calibration

3.16 ATS Configuration Menu

Note: The ATS Configuration menu appears only if a Model RXT transfer switch is connected.

Use the ATS Configuration submenu to check the Model RXT transfer switch system settings and time delays, and change the settings, if necessary.

Changing ATS Configuration Settings

To enable editing, press the select button. The value flashes to indicate that it can be changed. Press the up and down arrow buttons to change the value. Press the Select button to save the value shown.

Use the up and down arrow buttons to move to the next value to be changed. Repeat the adjustment process until all values are correct.

Press the down arrow until Return is displayed. Press the select button to return to the main menu.

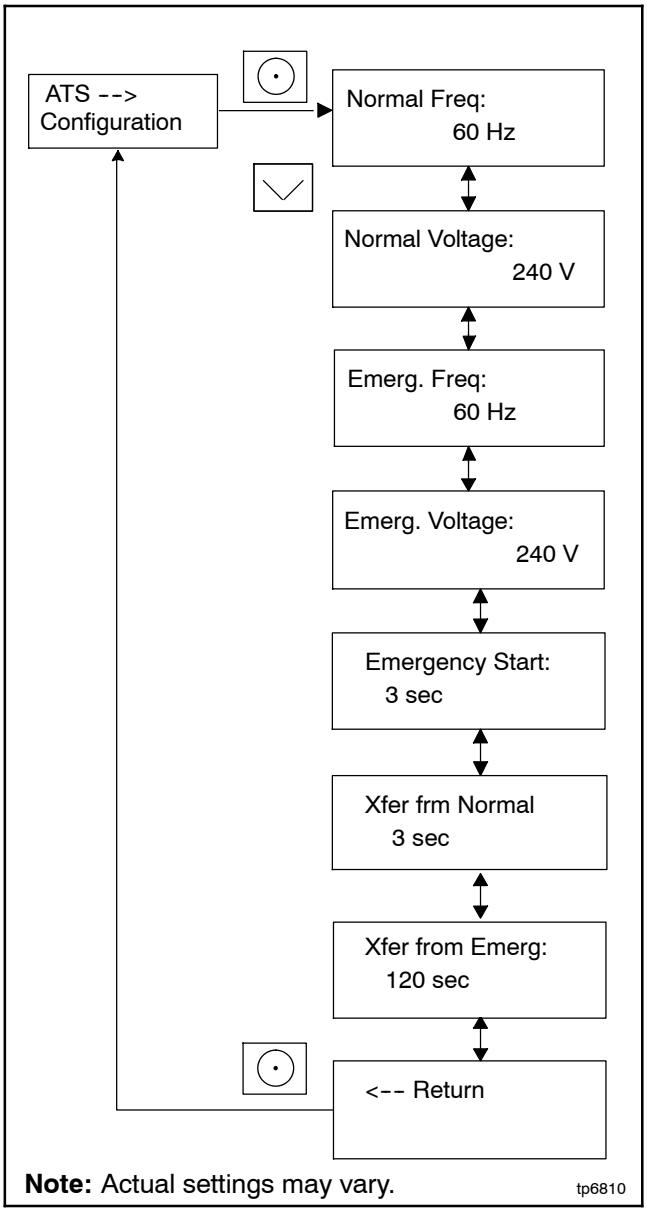

Figure 3-17 ATS Configuration Menu

3.17 Date and Time Menu

The date and time will typically be set at controller power-up. To change the date, time, or time format (12 hour or 24 hour), use the Date and Time menu. See Figure 3-18.

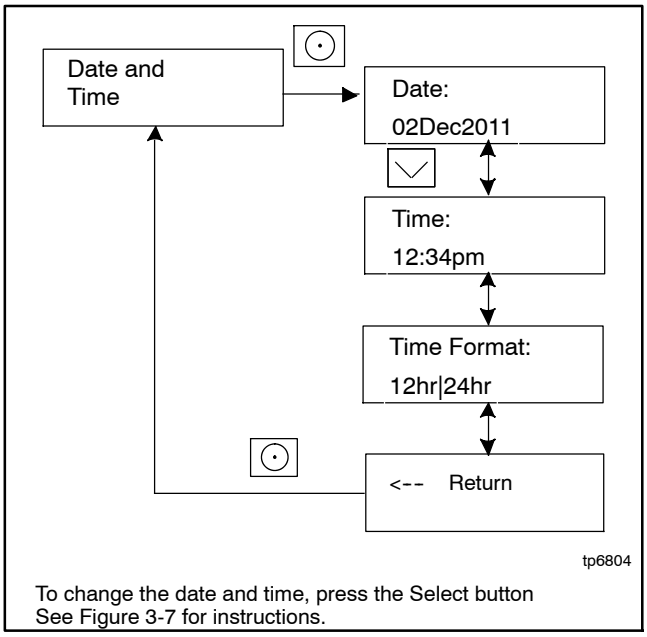

Figure 3-18 Date and Time Menu

3.18 Networking Information Menus

Use the networking menus to view and adjust communication settings for systems with remote RBUS devices such as a PIM or load shed kit, and for systems that use the Kohler OnCue® Plus Generator Management System.

RBUS is a proprietary RS-485 communications protocol.

The Networking Information menu leads to submenus for network and RBUS communication settings.

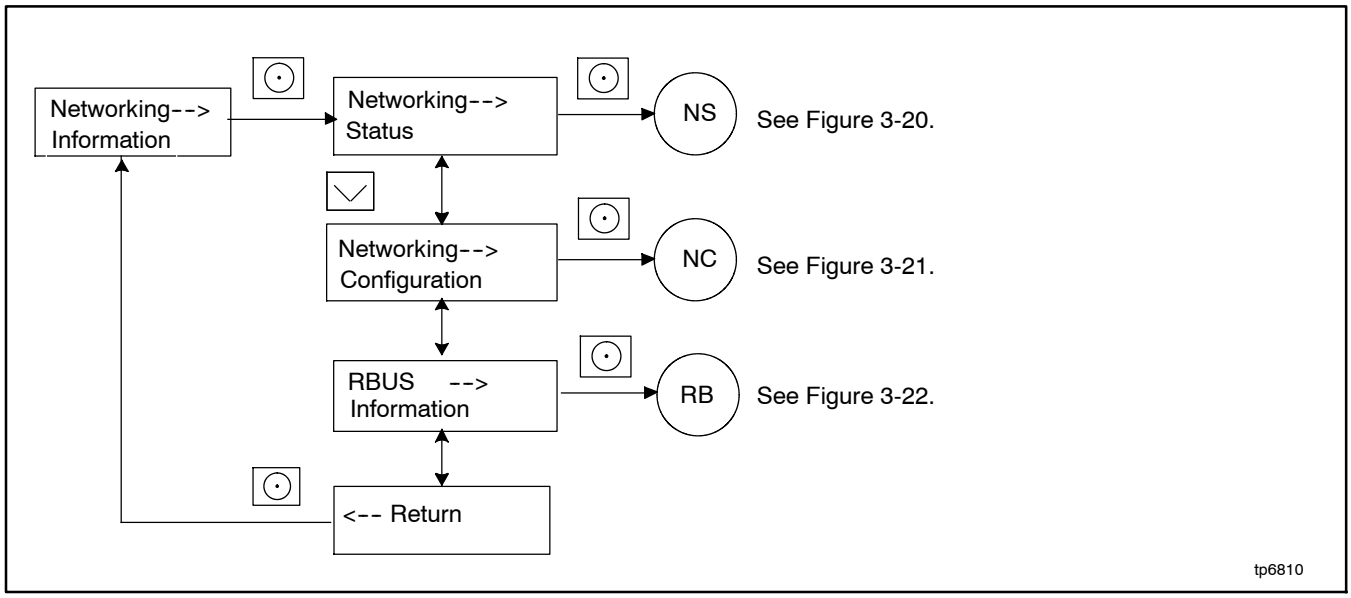

Figure 3-19 Networking Information Menu

3.18.1 Networking Status Submenu

The Networking Status submenu contains settings for OnCue®. Changes to these settings are not typically required.

If DHCP is enabled, IP parameters are not displayed. If DHCP is disabled (i.e., if a static IP address is used), the IP parameters are displayed.

To enable or disable DHCP and change the IP settings, go to the Networking Configuration menu. See Section 3.18.2.

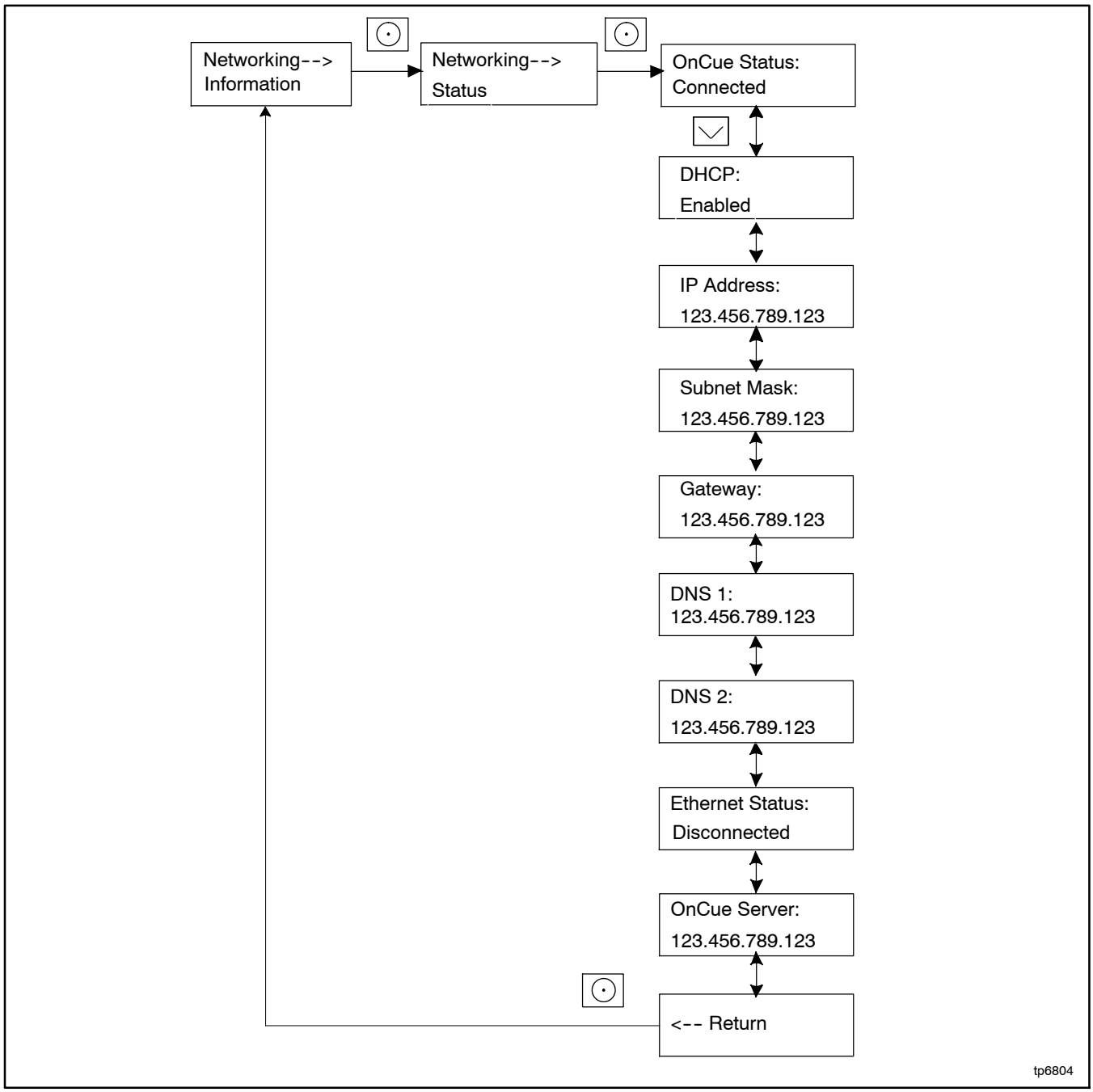

Figure 3-20 Network Status Submenu

3.18.2 Networking Configuration Submenu (OnCue Password)

The Networking Configuration menu includes settings used for communication with the Kohler OnCue® Plus Generator Management System.

Password

Note: Use the OnCue password shown on the controller display for OnCue or OnCue Plus applications.

For the initial OnCue Plus setup, you will be required to reset the OnCue password on the RDC2 controller, and then enter it into the OnCue Plus application. To reset the password, follow the instructions in Figure 3-21.

Note: The password is displayed for only 10 seconds. Be sure to write down the password and serial number.

A new password is generated each time the reset password procedure is performed. If the password is reset after the OnCue Plus system has been set up, the connection will be lost. Disconnect the battery power to the controller, wait a minute, then reconnect power.

DHCP Submenu

For most applications, the Dynamic Host Configuration Protocol (DHCP) is enabled and the IP settings cannot be changed from the controller keypad. If DHCP is enabled, IP parameters are not displayed.

If DHCP is disabled (i.e., if a static IP address is required), then the IP parameters can be modified. For applications that require a static IP address, press and hold the select button to enable editing, press the down arrow to disable DHCP, and then step to the next parameters and enter the information. See Figure 3-21.

If an error occurs while setting a parameter, an error message is displayed and then the controller exits the edit mode. Previous settings are preserved.

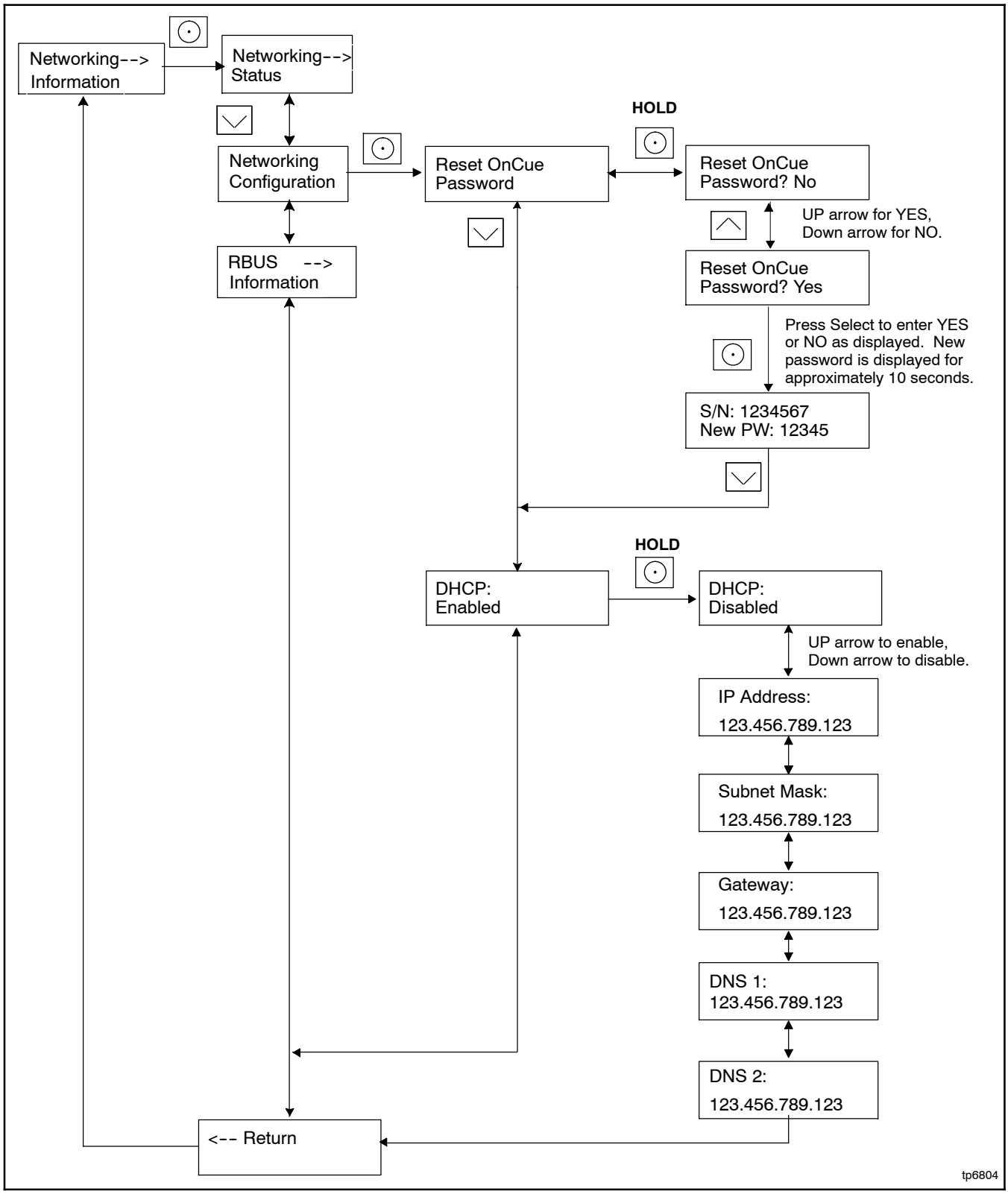

Figure 3-21 Networking Configuration Submenu

3.18.3 RBUS Information

The RBUS Information menu contains settings for remote modules that communicate with the RDC2 controller using RBUS protocol. This includes the following optional modules:

- Model RXT transfer switch
- Combined interface/load managment board on the RXT transfer switch
- Programmable Interface Module (PIM)
- Load shed kit
- PowerSync® Automatic Paralleling Module (APM)

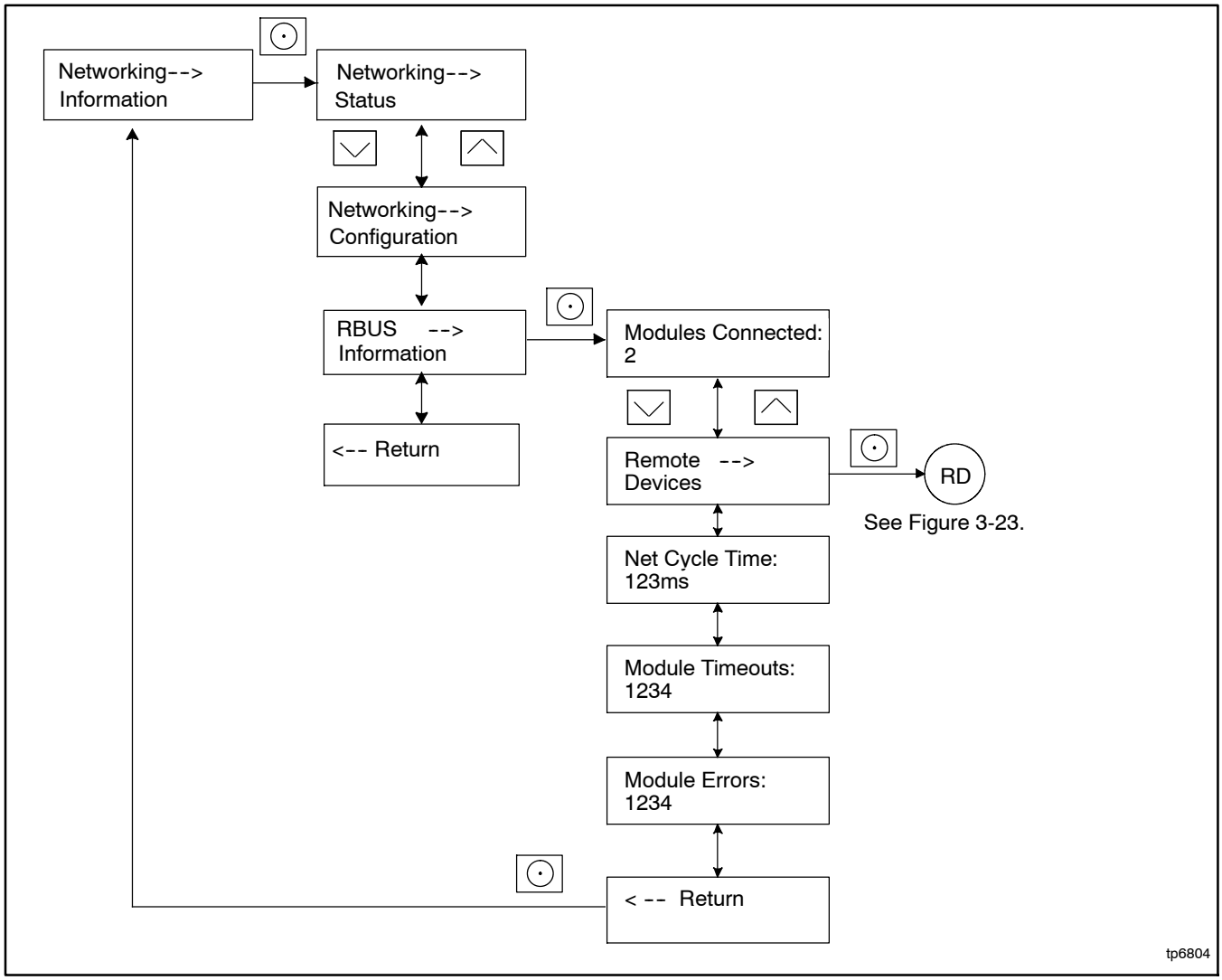

Figure 3-22 RBUS Information Submenu

3.18.4 Remote Devices Submenu

Check the status of remote devices communicating through RBUS. Device types can include:

- Model RXT ATS
- Programmable Interface Module (PIM)
- Load shed kit or combined interface/load management board on a Model RXT transfer switch
- PowerSync® Automatic Paralleling Module (APM)

The serial number for the RBUS module is shown on the circuit board inside the module enclosure.

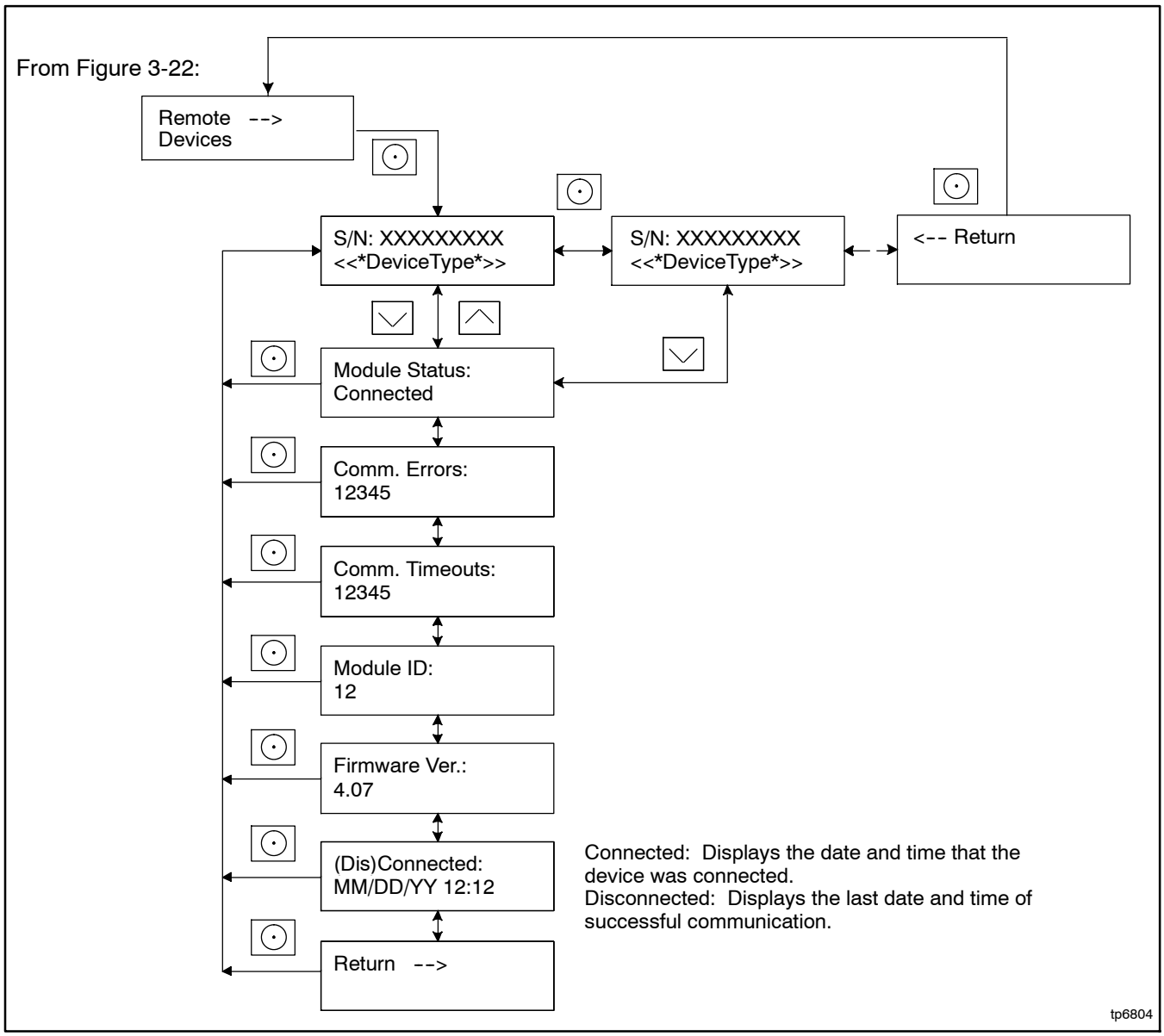

Figure 3-23 Remote Devices Submenu

3.19 Programmable Interface Module (PIM) Status Menu

The PIM status menu displays the status of inputs and outputs connected to the programmable interface module (PIM). this menu appears only if a PIM is connected. This is a status display menu only. Input and output settings cannot be changed from the RDC2 controller's user interface.

A personal computer running Kohler SiteTech™ software is required to change the input and output settings. Contact an authorized distributor or dealer for service.

The Kohler® OnCue® Plus Generator Management System can be used to turn outputs on and off. See the OnCue Plus Operation Manual for instructions.

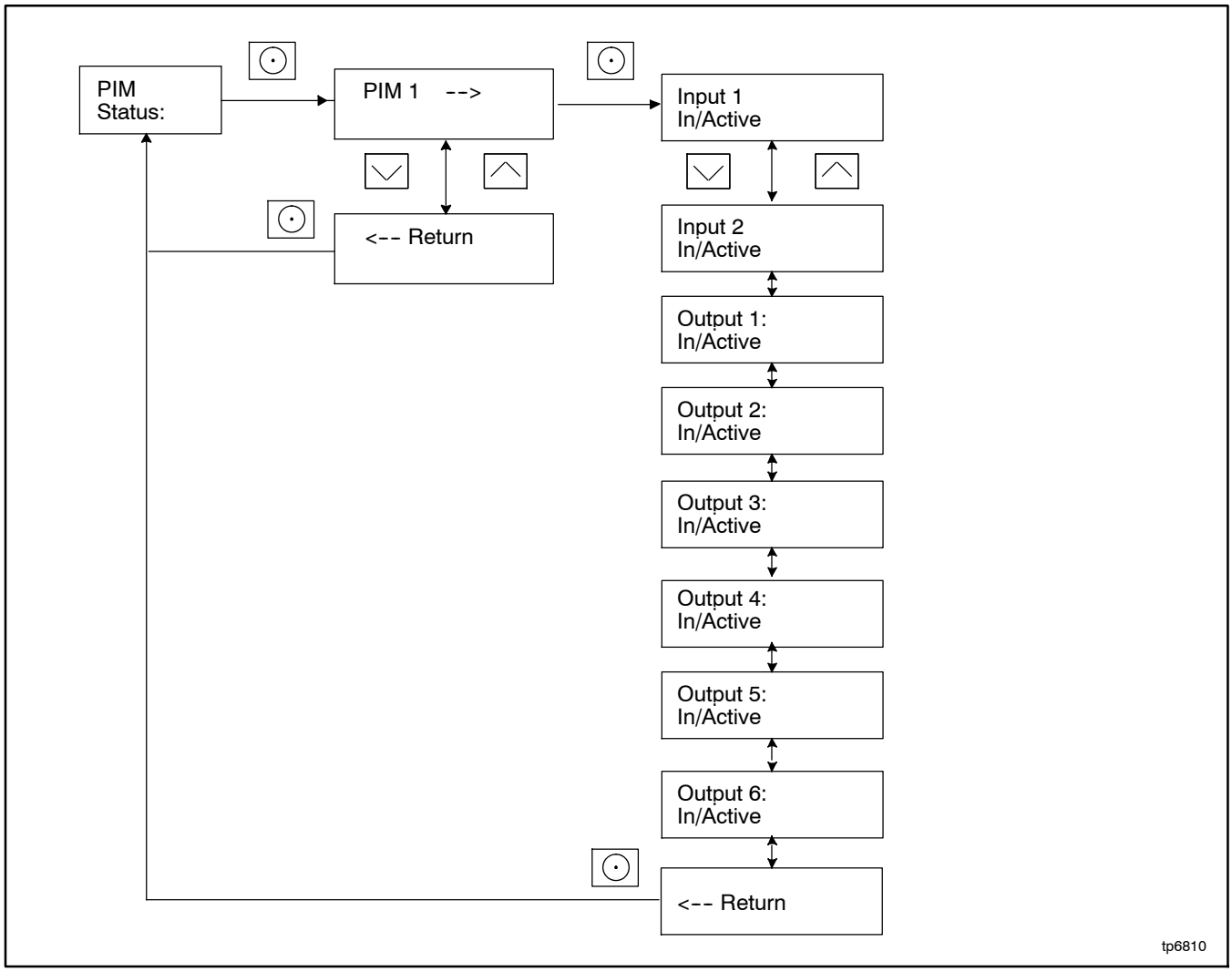

Figure 3-24 Programmable Interface Module (PIM) Status Menu

3.20 Load Control Menus

The Load Control menu displays the status of the load management device inputs and outputs, and allows a test of the load control output relays. This menu appears only if a load management device (load shed kit or Model RXT transfer switch with the combined interface/load management board) is connected.

Generator current is displayed as a percent of the maximum generator capacity. The load control module adds and sheds loads based on the generator current.

The test function cycles the relays in the order of their priority. For detailed information, refer to the instructions provided with the load shed kit. For the RXT combined interface/load management board, refer to the RXT automatic transfer switch Operation and Installation Manual.

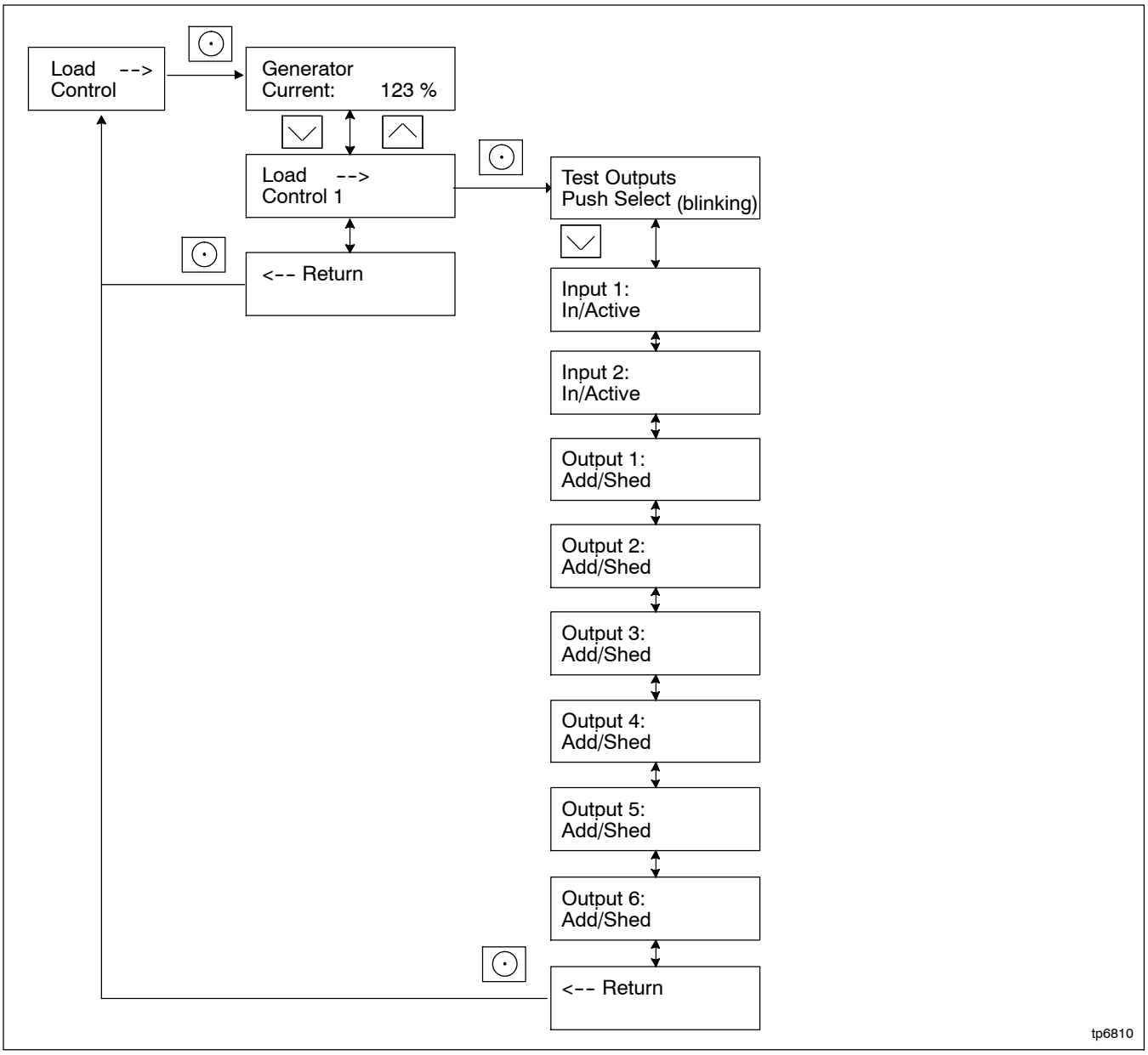

Figure 3-25 Load Control Status Menu

3.21 Event Log

The event log displays up to 1000 controller faults and notices, starting with the most recent event. Events are numbered 1–1000, with 1 being the most recent. Each event is displayed with the date and time of the event, the number of the event, a code to indicate whether the event was a warning (W), shutdown (S), or informational notice (I), the engine hours at the time of the event, and the event description.

The time and date for notices (I) are not stored in the controller.

Procedure to View Event History

1. Press Select to enter the main menu.
2. Press the down arrow to step down to the event log.
3. Press Select to display the most recent event.
4. Press the down arrow to step to the next event.
5. Use the up and down arrow buttons to view events.
6. Press the Select button to exit the event log.

To stop viewing the event history before the last event, press the select button to return to the main menu.

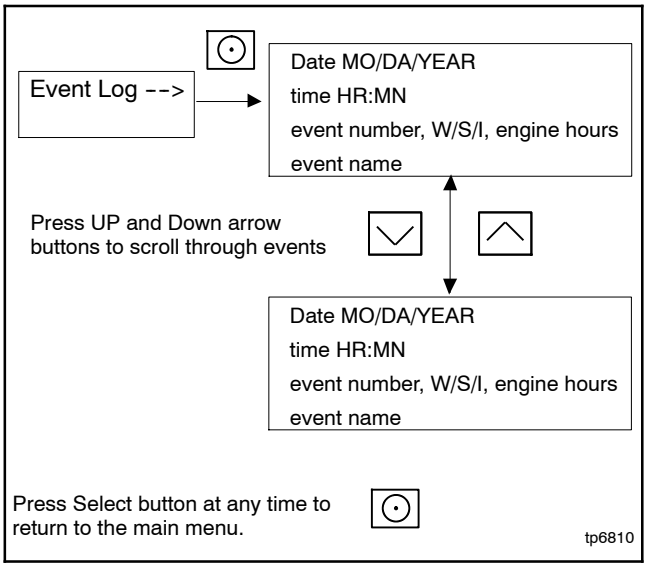

Figure 3-26 Event Log

⚠ WARNING

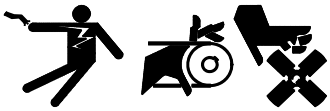

Accidental starting.
Can cause severe injury or death.

Disconnect the battery cables before working on the generator set. Remove the negative (–) lead first when disconnecting the battery. Reconnect the negative (–) lead last when reconnecting the battery.

Disabling the generator set. Accidental starting can cause severe injury or death. Before working on the generator set or equipment connected to the set, disable the generator set as follows: (1) Press the generator set off/reset button to shut down the generator set. (2) Disconnect the power to the battery charger, if equipped. (3) Remove the battery cables, negative (–) lead first. Reconnect the negative (–) lead last when reconnecting the battery. Follow these precautions to prevent the starting of the generator set by the remote start/stop switch.

⚠ DANGER

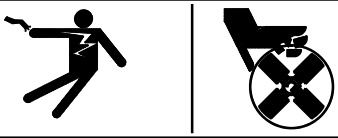

Hazardous voltage. Moving parts.
Will cause severe injury or death.

Operate the generator set only when all guards and electrical enclosures are in place.

⚠ WARNING

Hot engine and exhaust system.
Can cause severe injury or death.

Do not work on the generator set until it cools.

Servicing the exhaust system. Hot parts can cause severe injury or death. Do not touch hot engine parts. The engine and exhaust system components become extremely hot during operation.

4.1 Scheduled Maintenance

Refer to the following service schedules and the runtime hours displayed on the controller to schedule routine maintenance. Intervals are shown in hours of operation and/or time intervals (i.e. weekly, monthly, quarterly, etc.) Have an authorized distributor/dealer service the generator set at the designated intervals in the service schedule for the life of the generator set. Service units subject to extreme weather, long operating hours, or dusty or dirty conditions more frequently.

Contact an authorized distributor/dealer for parts.

4.1.1 Service Schedule, 14 kW Models

System Component or Procedure	See Section	Procedure: Visually Inspect	Check	Change	Clean	Test	Frequency
Fuel							
Flexible lines and connections		X		R			Quarterly
Main tank supply level			X				Weekly
Fuel piping		X					Yearly
Lubrication	4.2						
Oil level		X	X				Every 8 hours of engine operation
Crankcase breather hose		X					Yearly or 500 hours
Change oil				X			Yearly or 100 hours
Replace filter				X			Yearly or 200 hours
Cooling	4.5						
Air ducts, louvers			X		X		Yearly
Exhaust Line	4.6						
Leakage		X	X				Weekly
Insulation, fire hazards		X					Yearly
Obstructions or combustible materials near exhaust outlet		X					Weekly
DC Electrical System	4.7						
Check battery charger operation, charge rate		X					Monthly
Remove corrosion, clean and dry battery and rack		X			X		Yearly
Clean and tighten battery terminals and inspect boots		X	X				Yearly
Battery electrolyte level and specific gravity *			X				Yearly
AC Electrical System							
Tighten control and power wiring connections			X				Yearly
Remote control system, if equipped						X	Monthly
Visible wear or damage		X					Quarterly
Wire abrasions where subject to motion		X	X				Six Months
Wire-cable insulation condition		X					3 Years or 500 hours
Engine and Mounting							
Visible wear or damage		X					Weekly
Air cleaner service †	4.4		150	300			Yearly or hours shown
Spark plugs	4.3			300			
Replace stepper motor coupling and bushing				D			500 hours
Generator							
Visible wear or damage		X					Quarterly
Exercise generator set						X	Weekly
Brushes and collector ring		D			D		Yearly or 300 hours
Measure and record resistance readings of windings with insulation tester (Megger®, with SCR assembly or rectifier and load leads disconnected) *						D	3 Years
General Condition of Equipment							
Evidence of vibration, leakage, excessive noise, temperature, or deterioration		X	X		X		Weekly
Interior of sound enclosure		X			X		Quarterly

* Not necessary for maintenance-free batteries.
† Service more frequently under extremely dusty/dirty conditions.
Megger® is a registered trademark of Biddle Instruments.

X Action
D Authorized distributor/dealer only
R Replace as necessary

4.1.2 Service Schedule, 20 kW Models

System Component or Procedure	See Section	Procedure: Visually Inspect	Check	Change	Clean	Test	Frequency
Fuel							
Flexible lines and connections		X		R			Quarterly
Main tank supply level			X				Weekly
Fuel piping		X					Yearly
Lubrication	4.2						
Oil level			X				Every 8 hours of engine operation
Change oil				X			Yearly or 150 hours
Replace filter				X			Yearly or 150 hours
Crankcase breather hose		X					Yearly or 500 hours
Oil cooler		X			X		Yearly or 150 hours
Cooling	4.5						
Air ducts, louvers			X		X		Yearly
Exhaust System	4.6						
Leakage		X	X				Weekly
Insulation, fire hazards		X					Yearly
Obstructions or combustible materials near exhaust outlet		X					Weekly
DC Electrical System	4.7						
Check battery charger operation, charge rate		X					Monthly
Remove corrosion, clean and dry battery and rack		X			X		Yearly
Clean and tighten battery terminals and inspect boots		X	X				Yearly
Battery electrolyte level and specific gravity *			X				Yearly
AC Electrical System							
Tighten control and power wiring connections			X				Yearly
Remote control system, if equipped						X	Monthly
Visible wear or damage		X					Quarterly
Wire abrasions where subject to motion		X	X				Six Months
Wire-cable insulation condition		X					3 Years or 500 hours
Engine and Mounting							
Visible wear or damage		X					Weekly
Air cleaner service †	4.4		150	300			Yearly or hours shown
Spark plugs	4.3		150	300			
Replace stepper motor coupling and bushing				D			500 hours
Generator							
Visible wear or damage		X					Quarterly
Exercise generator set						W	Weekly
Brushes and collector ring		D			D		Yearly or 300 hours
Measure and record resistance readings of windings with insulation tester (Megger®, with SCR assembly or rectifier and load leads disconnected)						D	3 Years
General Condition of Equipment							
Evidence of vibration, leakage, deterioration, unusual or excessive noise or temperature		X	X		X		Weekly
Interior of sound enclosure		X			X		Quarterly

* Not necessary for maintenance-free batteries.
† Service more frequently under extremely dusty/dirty conditions.
Megger® is a registered trademark of Biddle Instruments.

X Action
D Authorized distributor/dealer only
R Replace as necessary

4.2 Lubrication System

See the service schedules in Section 4.1 for oil change and oil filter replacement intervals. See the service views in Section 1.8 for the oil drain, oil check, oil fill, and oil filter locations.

⚠ WARNING

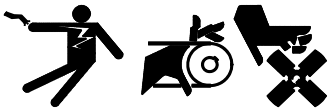

Accidental starting.
Can cause severe injury or death.

Disconnect the battery cables before working on the generator set. Remove the negative (–) lead first when disconnecting the battery. Reconnect the negative (–) lead last when reconnecting the battery.

Disabling the generator set. Accidental starting can cause severe injury or death. Before working on the generator set or equipment connected to the set, disable the generator set as follows: (1) Press the generator set off/reset button to shut down the generator set. (2) Disconnect the power to the battery charger, if equipped. (3) Remove the battery cables, negative (–) lead first. Reconnect the negative (–) lead last when reconnecting the battery. Follow these precautions to prevent the starting of the generator set by the remote start/stop switch.

⚠ WARNING

Hot engine and exhaust system.
Can cause severe injury or death.

Do not work on the generator set until it cools.

4.2.1 Low Oil Pressure Shutdown

The low oil pressure (LOP) shutdown feature protects the engine against internal damage if the oil pressure drops below a minimum pressure because of oil pump failure or other malfunction.

Note: The LOP shutdown feature does not protect against damage caused by operating when the oil level is low; it is not a low oil level shutdown. Check the oil level regularly, and add oil as needed.

4.2.2 Oil Check

The generator set is shipped with oil. Before operating the generator set, check the engine oil in the crankcase.

To check the oil level, shut down the generator set and wait several minutes. Remove the dipstick and wipe the end clean, reinsert, and remove. See Figure 4-1. Maintain the oil level between the Add and Full marks on the dipstick. Add 5W-30 or 10W-30 synthetic oil when the oil level is low.

Check the oil level before each use. For extended operation, check the oil level every 8 hours. Do not check the oil level when the generator set is running.

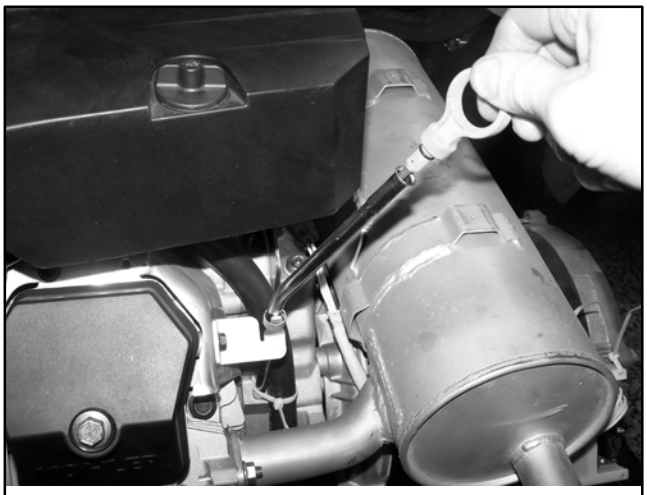

6515

Figure 4-1 Oil Check (typical)

4.2.3 Engine Oil Recommendation

Use 5W-30 or 10W-30 API (American Petroleum Institute) Service Class SG, SH, or SJ synthetic oil. Synthetic oil oxidizes and thickens less than other oils and leaves the engine intake valves and pistons cleaner.

4.2.4 Oil Change Procedure

Note: Dispose of all waste materials (engine oil, fuel, filter, etc.) in an environmentally safe manner.

Drain the oil while it is still warm.

1. **Drain the oil.**

   a. Press the OFF button on the generator set controller.

   b. Disconnect the utility power to the generator set.

   c. Disconnect the generator set engine starting battery, negative (–) lead first.

   d. Remove the end panels from the enclosure by lifting the panels up and out. Then lift off the service-side panel to access the oil drain valve and hose.

   e. Clean the area around the dipstick and oil fill cap.

   f. Remove the oil drain hose from its retaining clip. Remove the cap from the oil drain hose and lower the hose into an oil collection container.

   g. Open the oil drain valve on the engine.

   h. Remove the dipstick and oil fill cap. Allow time for the engine oil to drain completely.

   i. Close the oil drain valve. Replace the cap on the oil drain hose. Replace the oil drain hose in its retaining clip.

   j. Replace the dipstick.

2. **Replace the oil filter.**

   a. Clean the area around the oil filter.

   b. Loosen the oil filter by rotating it counterclockwise with an oil filter wrench. On 20 kW models, allow the oil to drain from the filter. Then remove the oil filter.

   c. Clean the gasket sealing surface of the oil filter adapter.

   d. Apply a light coat of clean oil to the rubber seal of the new oil filter.

   e. Install the new oil filter following the instructions provided with the filter.

3. **Fill with oil.**

Note: When the oil is drained, some oil remains in the engine. The amount of oil needed to refill the engine may be less than the capacity shown in Figure 4-2. Use the dipstick shown in Figure 4-1 to check the oil level during the fill. Do not fill past the full mark on the dipstick.

Note: See Section 4.2.3 for the recommended oil type.

Generator Set Model	Oil Capacity, L (qt.)
14 kW	1.8 (1.9)
20 kW	1.9 (2.0)

Figure 4-2 Engine Oil Capacity

   a. Add oil through the oil fill port; see Figure 4-3.

   b. Use the dipstick to check the oil level before starting to add the final quart of oil. Fill the engine to the F mark on the dipstick.

   c. Reinstall the dipstick and the oil fill cap.

Note: 20 kW model shown; 14 kW model is similar

1. Dipstick
2. Oil cooler located under shroud (20 kW only)
3. Oil fill location

Figure 4-3 Oil Fill Components

d. Reconnect the generator set engine starting battery, negative (–) lead last.

e. Reconnect the utility power to the generator set.

f. Press the RUN button on the generator set controller. The generator set will start.

g. Run the generator set for a minute to allow the oil pressure to reach operating range.

h. Stop the generator set, wait 1 minute, and then recheck the oil level. Add oil to bring the level up to the F mark on the dipstick.

4. **Check for leaks.**

   a. Check for oil leaks.

   b. Fix leaks and recheck the oil level.

   c. Reinstall the housing side panel.

5. **Reset the maintenance timer on the controller.**

4.2.5 Resetting the Maintenance Timer

1. From the Overview menu, step down to the Genset Run Time menu.

2. Press the Select button and then step down to the Next Maintenance screen.

3. Press the Select button.

4. Press the Up arrow button so that “Reset Maint Timer? Yes” is displayed.

5. Press the Select button. **After about two minutes,** the new maintenance interval and date are displayed.

4.2.6 Oil Cooler (20RCA/RCAL only)

Inspect and clean the oil cooler at the intervals indicated in the service schedule. The oil cooler must be kept free of debris.

See Figure 4-3 and Figure 4-4 for the oil cooler location. The oil cooler is located under the No. 2 cylinder shroud. Remove the top mounting screw and loosen the two side screws, then lift off the cylinder shroud.

Clean the outside of the oil cooler fins with a brush or with compressed air.

Note: See Figure 4-3 for location.

1. Oil cooler

62 590 01

Figure 4-4 Oil Cooler

4.3 Spark Plugs

⚠ WARNING

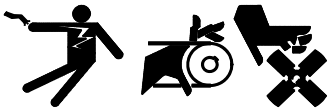

Accidental starting.
Can cause severe injury or death.

Disconnect the battery cables before working on the generator set. Remove the negative (–) lead first when disconnecting the battery. Reconnect the negative (–) lead last when reconnecting the battery.

Disabling the generator set. Accidental starting can cause severe injury or death. Before working on the generator set or equipment connected to the set, disable the generator set as follows: (1) Press the generator set off/reset button to shut down the generator set. (2) Disconnect the power to the battery charger, if equipped. (3) Remove the battery cables, negative (–) lead first. Reconnect the negative (–) lead last when reconnecting the battery. Follow these precautions to prevent the starting of the generator set by the remote start/stop switch.

⚠ WARNING

Hot engine and exhaust system.
Can cause severe injury or death.

Do not work on the generator set until it cools.

Reset the spark plug gap or replace the plugs with new plugs as necessary.

1. Clean the area around the base of the spark plug to keep dirt and debris out of the engine.

2. Remove the spark plug and check its condition. Replace the spark plug if it is worn or if its reuse is questionable.

3. Check the spark plug gap using a wire feeler gauge. See Figure 4-5 for the recommended spark plug gap. Adjust the gap by carefully bending the ground electrode. See Figure 4-6 and Figure 4-7.

4. Reinstall the spark plug into the cylinder head. Torque the spark plug to 24.4–29.8 Nm (18–22 ft. lb.)

Generator Set Model	Spark Plug Gap
14 and 20 kW models	0.76 mm (0.030 in.)

Figure 4-5 Spark Plug Gap

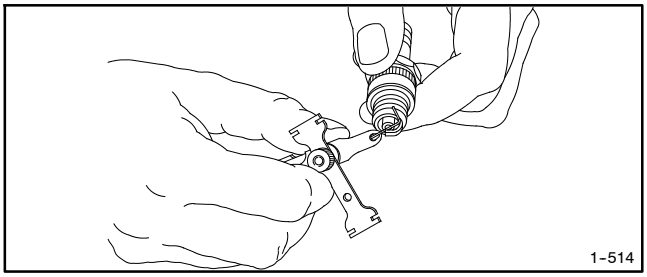

Figure 4-6 Checking the Spark Plug Gap

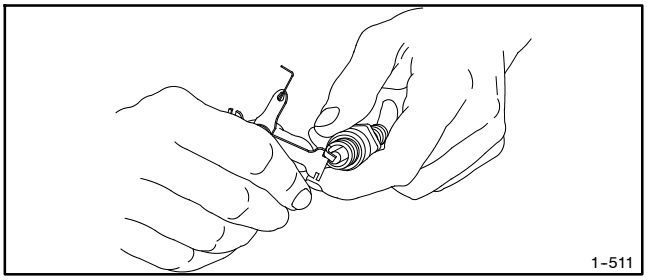

Figure 4-7 Adjusting the Spark Plug Gap

4.4 Air Cleaner Service

⚠ WARNING

Risk of fire.
Can cause severe injury or death.

Do not smoke or permit flames or sparks near fuels or the fuel system.

Servicing the air cleaner. A sudden backfire can cause severe injury or death. Do not operate the generator set with the air cleaner removed.

4.4.1 Air Cleaner, 14 kW Models

The engine has a replaceable high-density paper air cleaner element. See Figure 4-8.

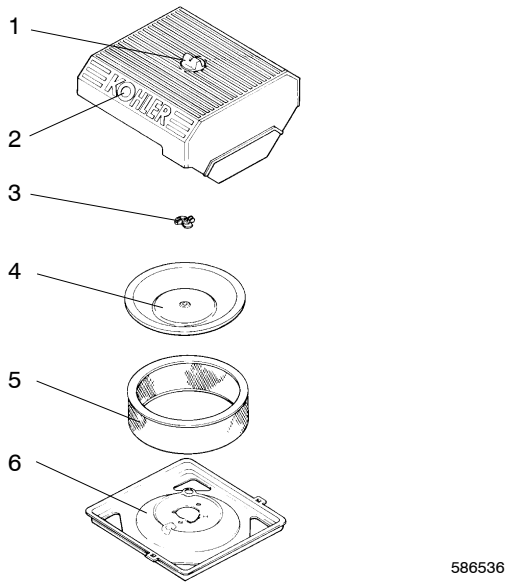

1. Cover knob
2. Air cleaner cover
3. Element cover nut
4. Element cover
5. Air cleaner element
6. Air cleaner base

Figure 4-8 Air Cleaner Components

Check for a buildup of dirt and debris around the air cleaner system. Keep this area clean. Also check for loose or damaged components. Replace all bent or damaged air cleaner components.

Note: Operating the engine with loose or damaged air cleaner components could allow unfiltered air into the engine causing premature wear and failure.

Air Cleaner Service

Use the following procedure to replace the paper element at the intervals specified in the service schedule. Replace the paper element more often under extremely dusty or dirty conditions.

1. Press the OFF button on the generator set controller.
2. Disconnect the utility power to the generator set.
3. Disconnect the generator set engine starting battery, negative (–) lead first.
4. Loosen the cover retaining knob and remove the cover.
5. Remove the element cover nut, element cover, and the paper element.

   Note: Do not wash the paper element or clean it with pressurized air, as this will damage the element.

6. Replace the element if it is dirty, bent, or damaged.
7. Check the air cleaner base. Make sure it is secure and not bent or damaged. Also check the element cover for damage and fit. Replace all damaged air cleaner components. Remove any loose dirt or debris from the air cleaner base. Wipe the base carefully so that no dirt drops into the intake throat. Check the condition of the rubber seal on the air cleaner stud and replace the seal if necessary.
8. Reinstall the paper element, element cover, element cover nut, and the air cleaner cover. Secure the cover with the cover retaining knob.
9. Reconnect the utility power to the generator set.
10. Reconnect the generator set engine starting battery, negative (–) lead last.

4.4.2 Air Cleaner, 20 kW Models

The engine is equipped with a replaceable, high density paper air cleaner element. See Figure 4-9.

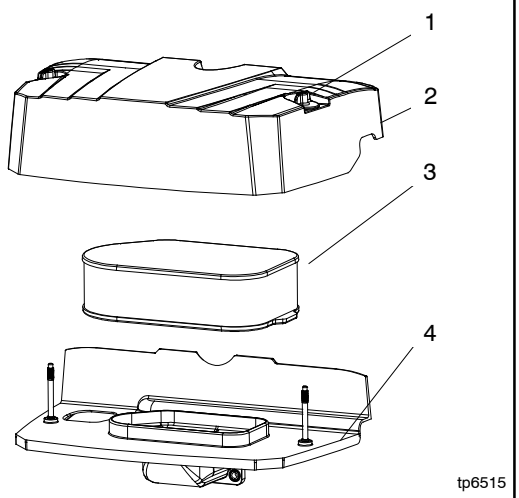

1. Knobs (qty.2)
2. Cover
3. Paper element
4. Base

Figure 4-9 Air Cleaner Components

Check the air cleaner daily or before starting the engine. Check for a buildup of dirt and debris around the air cleaner system. Keep this area clean. Also check for loose or damaged components. Replace all bent or damaged air cleaner components.

Note: Operating the engine with loose or damaged air cleaner components could allow unfiltered air into the engine causing premature wear and failure.

Air Cleaner Service

Replace the paper element at the intervals indicated in the service schedule. See Section 4.1.2 for the service schedule. See Figure 4-9 for the air cleaner components.

1. Loosen the two cover retaining knobs and remove the cover.
2. Remove the paper element.
3. Do not wash the paper element or use pressurized air, as this will damage the element. Replace a dirty, bent, or damaged element. Handle new elements carefully; do not use if the sealing surfaces are bent or damaged.
4. When servicing the air cleaner, check the air cleaner base. Make sure it is secured and not bent or damaged. Also, check the element cover for damage or improper fit. Replace all damaged air cleaner components.

Note: If any loose dirt or debris fell on the air cleaner base when the element was removed, carefully remove it and wipe the base clean. Be careful that none of it drops into the intake throat.

5. Reinstall the paper element onto the air cleaner base. Make sure the element is flat and properly seated.
6. Install the air cleaner cover and secure with the two retaining knobs.
7. When element replacement is necessary, order genuine Kohler parts.

4.5 Cooling System

The engine fan draws cooling air through the openings in the sides and end near the battery. The alternator fan draws cooling air through openings on the side walls of the enclosure. The cooling air mixes with the engine exhaust and is discharged at the exhaust outlet. See the service view in Section 1.8 for air intake and exhaust locations. To prevent generator set damage caused by overheating, keep the housing cooling inlets and outlets clean and unobstructed at all times.

Note: Do not block the generator set cooling air inlets or mount other equipment above them. Overheating and severe generator damage may occur.

4.6 Exhaust System

⚠ WARNING

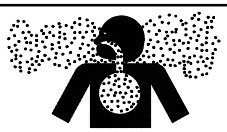

Carbon monoxide.
Can cause severe nausea, fainting, or death.

The exhaust system must be leakproof and routinely inspected.

Remove all combustible materials from the exhaust location. Combustible materials include building materials as well as natural surroundings. Keep dry field grass, foliage, and combustible landscaping material a minimum of 1.2 m (4 ft.) from the exhaust outlet.

Periodically inspect the exhaust system components for cracks, leaks, and corrosion.

- Check for corroded or broken metal parts and replace them as needed.
- Check that the exhaust outlet is clear.

4.7 Battery

⚠ WARNING

Sulfuric acid in batteries.
Can cause severe injury or death.

Wear protective goggles and clothing. Battery acid may cause blindness and burn skin.

Battery electrolyte is a diluted sulfuric acid. Battery acid can cause severe injury or death. Battery acid can cause blindness and burn skin. Always wear splashproof safety goggles, rubber gloves, and boots when servicing the battery. Do not open a sealed battery or mutilate the battery case. If battery acid splashes in the eyes or on the skin, immediately flush the affected area for 15 minutes with large quantities of clean water. Seek immediate medical aid in the case of eye contact. Never add acid to a battery after placing the battery in service, as this may result in hazardous spattering of battery acid.

Battery acid cleanup. Battery acid can cause severe injury or death. Battery acid is electrically conductive and corrosive. Add 500 g (1 lb.) of bicarbonate of soda (baking soda) to a container with 4 L (1 gal.) of water and mix the neutralizing solution. Pour the neutralizing solution on the spilled battery acid and continue to add the neutralizing solution to the spilled battery acid until all evidence of a chemical reaction (foaming) has ceased. Flush the resulting liquid with water and dry the area.

Battery gases. Explosion can cause severe injury or death. Battery gases can cause an explosion. Do not smoke or permit flames or sparks to occur near a battery at any time, particularly when it is charging. Do not dispose of a battery in a fire. To prevent burns and sparks that could cause an explosion, avoid touching the battery terminals with tools or other metal objects. Remove all jewelry before servicing the equipment. Discharge static electricity from your body before touching batteries by first touching a grounded metal surface away from the battery. To avoid sparks, do not disturb the battery charger connections while the battery is charging. Always turn the battery charger off before disconnecting the battery connections. Ventilate the compartments containing batteries to prevent accumulation of explosive gases.

Battery short circuits. Explosion can cause severe injury or death. Short circuits can cause bodily injury and/or equipment damage. Disconnect the battery before generator set installation or maintenance. Remove all jewelry before servicing the equipment. Use tools with insulated handles. Remove the negative (-) lead first when disconnecting the battery. Reconnect the negative (-) lead last when reconnecting the battery. Never connect the negative (-) battery cable to the positive (+) connection terminal of the starter solenoid. Do not test the battery condition by shorting the terminals together.

Refer to this section for general battery information and maintenance. Also consult the battery manufacturer's instructions for battery maintenance.

All generator set models use a negative ground with a 12-volt engine electrical system. Consult the generator set nameplate for the engine electrical system voltage. Consult the generator spec sheet for battery size and capacity recommendations for replacement purposes. Wiring diagrams provide battery connection information. See Figure 4-10 for typical battery connections.

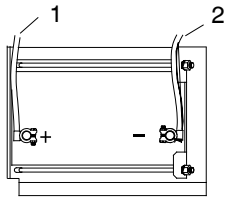

1. To positive (+) terminal on starter solenoid.
2. To ground (–) terminal on or near starter motor.

Figure 4-10 12-Volt Engine Electrical System Single Starter Motor, Typical Battery Connection

4.7.1 Cleaning the Battery

Clean the battery and cables and tighten battery terminals using the service schedule recommendations. To prevent corrosion, maintain tight, dry electrical connections at the battery terminals. To remove corrosion from battery terminals, disconnect the cables from the battery and scrub the terminals with a wire brush. Clean the battery and cables with a solution of baking soda and water. After cleaning, flush the battery and cables with clean water and wipe them with a dry, lint-free cloth.

After reconnecting the battery cables, coat the battery terminals with petroleum jelly, silicone grease, or other nonconductive grease.

4.7.2 Checking Electrolyte Level

Check the electrolyte level of batteries with filler caps monthly. Remove filler caps and verify that electrolyte level reaches bottom of filler holes. Refill as necessary with distilled water. DO NOT add fresh electrolyte. Tighten all filler caps. If water is added during freezing temperatures, run the generator set for 20–30 minutes to mix the electrolyte and water to prevent battery damage from freezing.

4.7.3 Checking Specific Gravity

Use a battery hydrometer to check the specific gravity of the electrolyte in each battery cell. While holding the hydrometer vertically, read the number on the glass bulb at the top of the electrolyte level or the number adjacent to the pointer. If the hydrometer used does not have a correction table, use the correction factors in Figure 4-13. Determine specific gravity and electrolyte temperature of battery cells. Locate temperature in Figure 4-13 and adjust the specific gravity by the amount shown.

The battery is fully charged if the specific gravity is 1.260 at an electrolyte temperature of 80°F (26.7°C). The difference between specific gravities of each cell should not exceed ±0.01. Charge the battery if the specific gravity is below 1.215 at an electrolyte temperature of 80°F (26.7°C). See Figure 4-11.

Specific Gravity, Corrected to 80°F (26.7°C)	Battery Condition
Below 1.215	Needs charging
1.260	Fully charged

Figure 4-11 Specific Gravity Interpretation

Some battery testers have four or five beads in the test tube. Draw electrolyte into the tube as performed with the battery hydrometer described previously. Use the manufacturer's instructions. Figure 4-12 interprets typical test results.

Number of Floating Beads	Battery Condition
5	Overcharged
4	Fully charged
3	Good charge
1 or 2	Low charge
0	Dead battery

Figure 4-12 Bead-Type Test Interpretation

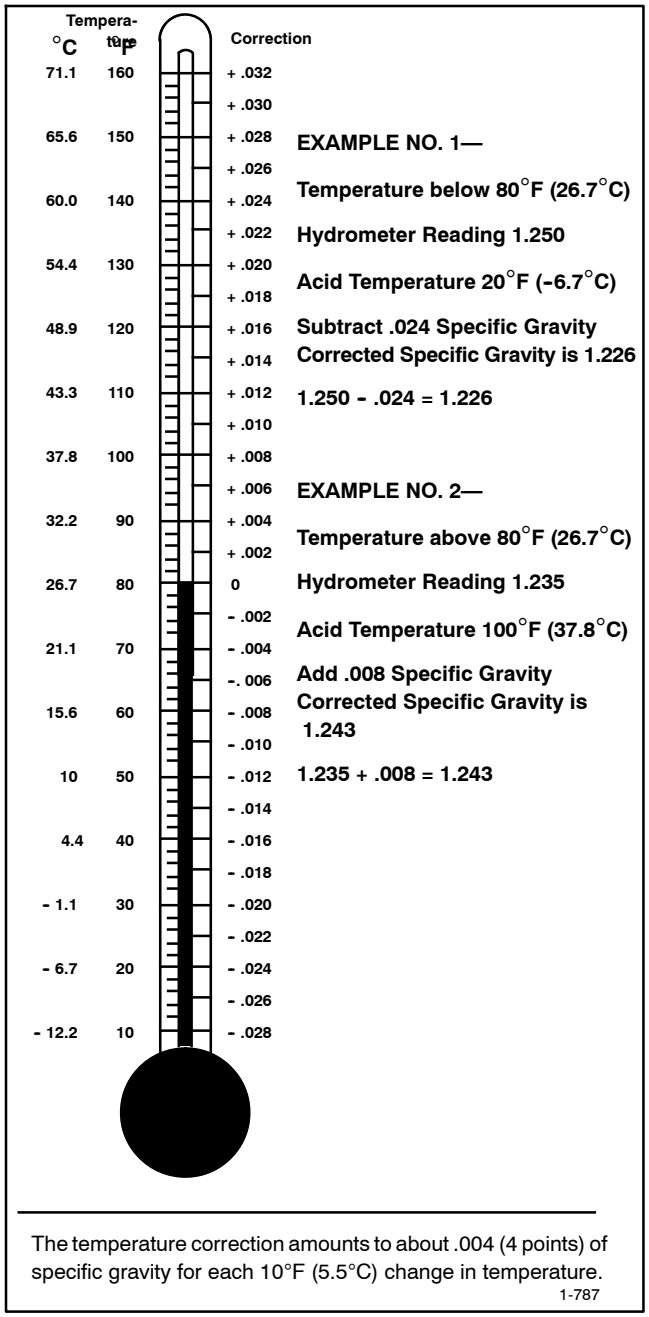

Figure 4-13 Specific Gravity Temperature Correction

4.8 Storage Procedure

Perform the following storage procedure before removing the generator set from service for three months or longer. Follow the engine manufacturer's recommendations for storage, if available.

Note: Run the generator set monthly whenever possible.

4.8.1 Lubricating System

1. Operate the generator set until it reaches operating temperature, or about 15 minutes.
2. Stop the generator set.
3. While the engine is still warm, drain the engine lubrication oil from the engine crankcase.
4. Refill engine crankcase with oil. See Section 4.2.3 for oil recommendations.
5. Run the generator set for a few minutes to distribute the clean oil.
6. Stop the generator set.

4.8.2 Fuel System

1. Start the generator set.
2. With the generator set running, shut off the gas supply.
3. Run the generator set until the engine stops.
4. Press the OFF button on the generator set controller.

4.8.3 Cylinder Lubrication

1. Remove the spark plugs.
2. Pour one tablespoon of engine oil into each spark plug hole. Install the spark plugs and *ground* the spark plug leads. *Do not connect the leads to the plugs.*
3. Crank the engine two or three revolutions to lubricate the cylinders.

4.8.4 Exterior Preparation

1. Clean the exterior surface of the generator set.
2. Seal all openings in the engine with nonabsorbent adhesive tape.
3. Mask all areas to be used for electrical contact.
4. Spread a light film of oil over unpainted metallic surfaces to prevent rust and corrosion.

4.8.5 Battery

Perform battery storage last.

1. Press the OFF button on the generator set controller.
2. Disconnect the battery, negative (–) lead first.
3. Clean the battery.
4. Place the battery in a warm, dry location.
5. Connect the battery to a float/equalize battery charger, or charge the battery monthly using a trickle charger. Follow the battery charger manufacturer's recommendations.

Notes

5.1 Introduction

Use the troubleshooting charts in this section to diagnose and correct common problems. First check for simple causes such as a dead engine starting battery, loose connections, or an open circuit breaker. The charts include a list of common problems, possible causes of the problem, and recommended corrective actions.

If the procedures in this manual do not explain how to correct the problem, contact an authorized distributor/dealer. Maintain a record of repairs and adjustments performed on the equipment. Use the record to help describe the problem and repairs or adjustments made to equipment.

5.2 Fault Messages

The controller displays fault messages to aid in troubleshooting. Selected fault messages and recommended checks are listed in Figure 2-3.

Identify and correct the cause of the fault condition. Then reset the controller after a fault shutdown. See Section 2.5.4.

5.3 Circuit Protection

If the generator set circuit breaker trips repeatedly, contact an authorized distributor/ dealer for service.

5.3.1 Controller Internal Circuit Protection

The controller is equipped with internal circuit protection. A fault message, Accy PwrOver Warning or MainPwrOverL Shutdown, is displayed if this internal protection is activated. Press OFF to reset. Contact an authorized Kohler distributor/dealer for service.

5.3.2 Line Circuit Breaker

The line circuit breaker interrupts the generator output in the event of a fault in the wiring between the generator and the load. If the circuit breaker trips, reduce the load and switch the breaker back to the ON position.

5.4 USB Port and Auxiliary Winding Mini-Breaker

The USB port is located under a small rubber cover as shown in Figure 5-1. The alternator winding circuit breaker is located on the engine side of the bulkhead as shown in Figure 5-1.

A personal computer (laptop) with Kohler® SiteTech™ software can be used to view the event history and adjust controller settings. Use a USB cable with a mini-B connector to connect the controller's USB port to your PC.

See TP-6701, SiteTech™ Software Operation Manual, for software operation instructions.

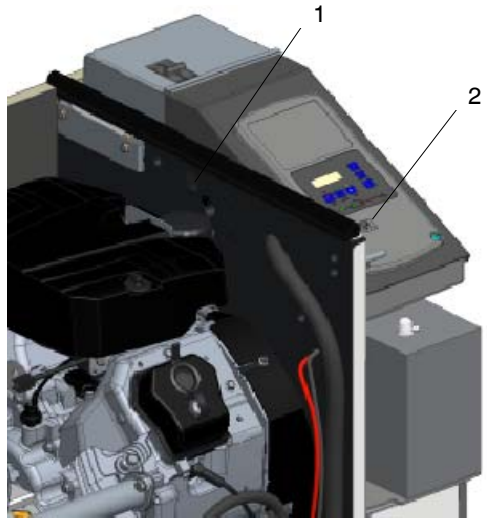

1. Mini-breaker location (access through engine compartment)
2. USB port on RDC2 controller

Figure 5-1 USB Port and Mini-Breaker Locations

5.5 Thermostat

⚠ WARNING

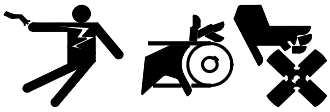

Accidental starting.
Can cause severe injury or death.

Disconnect the battery cables before working on the generator set. Remove the negative (–) lead first when disconnecting the battery. Reconnect the negative (–) lead last when reconnecting the battery.

Disabling the generator set. Accidental starting can cause severe injury or death. Before working on the generator set or equipment connected to the set, disable the generator set as follows: (1) Press the generator set off/reset button to shut down the generator set. (2) Disconnect the power to the battery charger, if equipped. (3) Remove the battery cables, negative (–) lead first. Reconnect the negative (–) lead last when reconnecting the battery. Follow these precautions to prevent the starting of the generator set by the remote start/stop switch.

⚠ WARNING

Hot engine and exhaust system.
Can cause severe injury or death.

Do not work on the generator set until it cools.

Servicing the exhaust system. Hot parts can cause severe injury or death. Do not touch hot engine parts. The engine and exhaust system components become extremely hot during operation.

The generator sets include a resettable thermostat. See Figure 5-2 for the thermostat location in the air intake area, near the fuel system. The thermostat detects excess heat inside the enclosure. If the thermostat trips, the generator will shut down and the controller will display a fault (underspeed, underfrequency, or undervoltage). Check for blocked air inlets and exhaust outlets. Then follow these steps to reset the thermostat.

Procedure to Reset the Thermostat

1. Disconnect the utility power to the generator by opening (turning OFF) the corresponding circuit breaker at the building's distribution panel.
2. Open the enclosure roof and secure it with the roof stay on the left side of the enclosure.
3. Remove the air intake panel. See Figure 5-2.
4. Press the button on the thermostat to reset it.
5. Replace the air intake panel.
6. Reconnect utility power to the generator set by closing the circuit breaker in the distribution panel.
7. Reset the fault on the controller. Refer to Section 2.5 for instructions, if necessary.

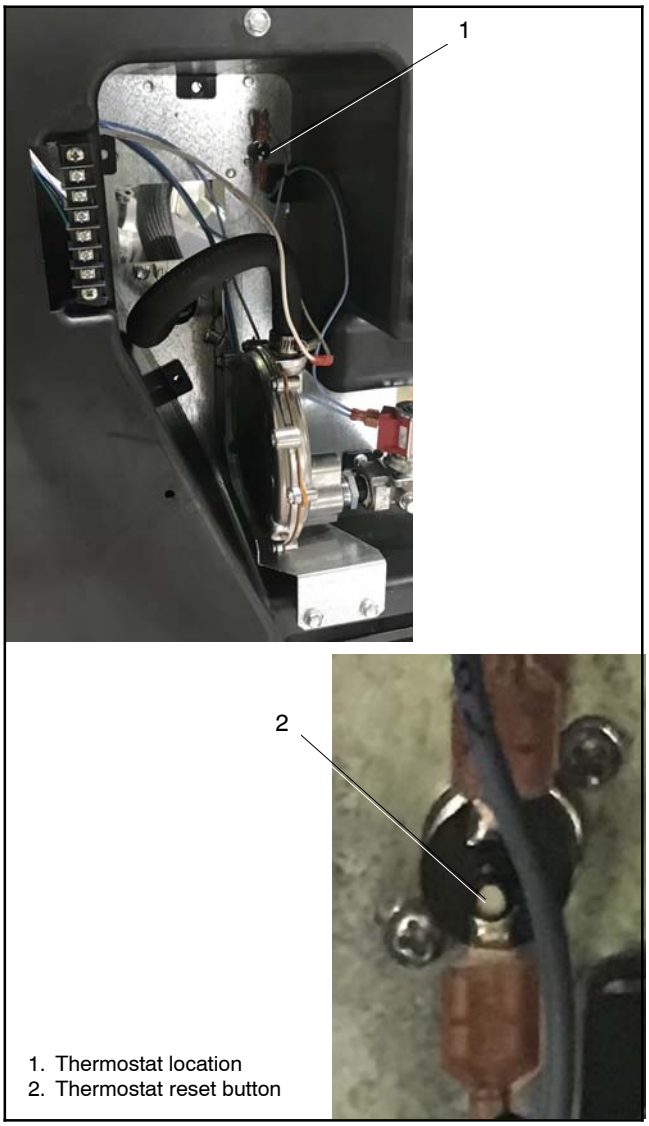

Figure 5-2 Thermostat

5.6 Troubleshooting

Figure 5-3 contains generator set troubleshooting, diagnostic, and repair information. Check for loose connections before replacing parts.

Troubleshooting Table		
Problem	**Possible Cause**	**Corrective Action**
Controller display backlight is off.	Backlight turns off after about 1 minute with no activity.	Backlight will turn on when a button is pressed or the generator set starts.
Controller display is off.	Low or no battery voltage.	Check connections. Check generator set battery. See Figure 5-3.
The generator set does not crank.	Battery weak or dead.	Recharge or replace the battery. Make sure that the AC power to the generator set controller is backed up by the generator set.
	Battery connections reversed or poor.	Check the connections.
	Fault shutdown.	Check the controller display for fault messages. See Section 2.5. Correct the fault condition and reset the controller.
	Generator set in the OFF mode.	Press the RUN button to start the engine or press AUTO to allow remote starting.
	Generator thermostat tripped.	Check for obstructed air inlets and outlets. Reset the thermostat. See Section 5.5.
The generator set cranks but does not start, starts hard, lacks power, or operates erratically.	Air cleaner clogged.	Clean and/or replace the air cleaner.
	Battery weak or dead.	Recharge or replace the battery.
	Battery connection poor.	Clean and tighten the battery connections.
	Spark plug wire connection loose.	Check the spark plug wires.
	Low oil pressure shutdown.	Check for oil leaks. Check the oil level and add oil if necessary.
	Fuel pressure insufficient.	Check the fuel supply and valves.
	Engine malfunction.	Contact an authorized distributor/dealer.
No AC output.	Line circuit breaker in the OFF position.	Place the circuit breaker in the ON position.
	Line circuit breaker tripping because of overload.	Reduce the load on the generator set by unplugging non-essential appliances.
	Line circuit breaker tripping because of short circuit.	Contact an authorized distributor/dealer for service.
	Auxiliary winding circuit breaker tripped.	Reset the circuit breaker (located in controller's service access area). Contact an authorized distributor/dealer for service if breaker trips repeatedly.
Low output or excessive drop in voltage.	Generator set overloaded.	Reduce the load by unplugging non-essential appliances.

Troubleshooting Table		
Problem	**Possible Cause**	**Corrective Action**
Generator set stops suddenly.	Low oil pressure shutdown.	Check for oil leaks. Check the oil level and add oil if necessary.
	No fuel.	Check fuel valves and fuel supply. Model 20RCA/20RCAL only: Check enclosure thermostat and reset if tripped. See Section 5.5. Check and clear air inlets and exhaust outlets.
	Overcrank shutdown.	Reset the controller. If the overcrank fault occurs again, contact an authorized distributor/dealer.
	Auxiliary winding circuit breaker tripped.	Reset the auxiliary winding circuit breaker. Contact an authorized distributor/dealer for service if breaker trips repeatedly.
	Fault shutdown.	Check the controller display for fault messages. See Section 2.5. Correct the fault condition and reset the controller.
	Generator set in the OFF mode.	Press the RUN button to start the engine or press AUTO to allow remote starting.
	Remote stop command received from a remote switch, ATS, or OnCue®Plus.	Check the remote switch position. Check OnCue®Plus.
	Generator thermostat tripped.	Check for obstructed air inlets and outlets. Reset the thermostat. See Section 5.5.
	Engine malfunction.	Contact an authorized distributor/dealer.

Figure 5-3 General Troubleshooting

Appendix A Abbreviations

The following list contains abbreviations that may appear in this publication.

A, amp	ampere
ABDC	after bottom dead center
AC	alternating current
A/D	analog to digital
ADC	advanced digital control; analog to digital converter
adj.	adjust, adjustment
ADV	advertising dimensional drawing
Ah	amp-hour
AHWT	anticipatory high water temperature
AISI	American Iron and Steel Institute
ALOP	anticipatory low oil pressure
alt.	alternator
Al	aluminum
ANSI	American National Standards Institute (formerly American Standards Association, ASA)
AO	anticipatory only
APDC	Air Pollution Control District
API	American Petroleum Institute
approx.	approximate, approximately
APU	Auxiliary Power Unit
AQMD	Air Quality Management District
AR	as required, as requested
AS	as supplied, as stated, as suggested
ASE	American Society of Engineers
ASME	American Society of Mechanical Engineers
assy.	assembly
ASTM	American Society for Testing Materials
ATDC	after top dead center
ATS	automatic transfer switch
auto.	automatic
aux.	auxiliary
avg.	average
AVR	automatic voltage regulator
AWG	American Wire Gauge
AWM	appliance wiring material
bat.	battery
BBDC	before bottom dead center
BC	battery charger, battery charging
BCA	battery charging alternator
BCI	Battery Council International
BDC	before dead center
BHP	brake horsepower
blk.	black (paint color), block (engine)
blk. htr.	block heater
BMEP	brake mean effective pressure
bps	bits per second
br.	brass
BTDC	before top dead center
Btu	British thermal unit
Btu/min.	British thermal units per minute
C	Celsius, centigrade
cal.	calorie
CAN	controller area network
CARB	California Air Resources Board
CAT5	Category 5 (network cable)
CB	circuit breaker
CC	crank cycle
cc	cubic centimeter
CCA	cold cranking amps
ccw.	counterclockwise
CEC	Canadian Electrical Code
cert.	certificate, certification, certified
cfh	cubic feet per hour
cfm	cubic feet per minute
CG	center of gravity
CID	cubic inch displacement
CL	centerline
cm	centimeter
CMOS	complementary metal oxide substrate (semiconductor)
com	communications (port)
coml	commercial
Coml/Rec	Commercial/Recreational
conn.	connection
cont.	continued
CPVC	chlorinated polyvinyl chloride
crit.	critical
CSA	Canadian Standards Association
CT	current transformer
Cu	copper
cUL	Canadian Underwriter's Laboratories
CUL	Canadian Underwriter's Laboratories
cu. in.	cubic inch
cw.	clockwise
CWC	city water-cooled
cyl.	cylinder
D/A	digital to analog
DAC	digital to analog converter
dB	decibel
dB(A)	decibel (A weighted)
DC	direct current
DCR	direct current resistance
deg., °	degree
dept.	department
dia.	diameter
DI/EO	dual inlet/end outlet
DIN	Deutsches Institut fur Normung e. V. (also Deutsche Industrie Normenausschuss)
DIP	dual inline package
DPDT	double-pole, double-throw
DPST	double-pole, single-throw
DS	disconnect switch
DVR	digital voltage regulator
E^2PROM, EEPROM	electrically-erasable programmable read-only memory
E, emer.	emergency (power source)
ECM	electronic control module, engine control module
EDI	electronic data interchange
EFR	emergency frequency relay
e.g.	for example (*exempli gratia)*
EG	electronic governor
EGSA	Electrical Generating Systems Association
EIA	Electronic Industries Association
EI/EO	end inlet/end outlet
EMI	electromagnetic interference
emiss.	emission
eng.	engine
EPA	Environmental Protection Agency
EPS	emergency power system
ER	emergency relay
ES	engineering special, engineered special
ESD	electrostatic discharge
est.	estimated
E-Stop	emergency stop
etc.	et cetera (and so forth)
exh.	exhaust
ext.	external
F	Fahrenheit, female
FHM	flat head machine (screw)
fl. oz.	fluid ounce
flex.	flexible
freq.	frequency
FS	full scale
ft.	foot, feet
ft. lb.	foot pounds (torque)
ft./min.	feet per minute
ftp	file transfer protocol
g	gram
ga.	gauge (meters, wire size)
gal.	gallon
gen.	generator
genset	generator set
GFI	ground fault interrupter
GND, ⏚	ground
gov.	governor
gph	gallons per hour
gpm	gallons per minute
gr.	grade, gross
GRD	equipment ground
gr. wt.	gross weight
H x W x D	height by width by depth
HC	hex cap
HCHT	high cylinder head temperature
HD	heavy duty
HET	high exhaust temp., high engine temp.
hex	hexagon
Hg	mercury (element)
HH	hex head
HHC	hex head cap
HP	horsepower
hr.	hour
HS	heat shrink
hsg.	housing
HVAC	heating, ventilation, and air conditioning
HWT	high water temperature
Hz	hertz (cycles per second)
IBC	International Building Code
IC	integrated circuit
ID	inside diameter, identification
IEC	International Electrotechnical Commission
IEEE	Institute of Electrical and Electronics Engineers
IMS	improved motor starting
in.	inch
in. H_2O	inches of water
in. Hg	inches of mercury
in. lb.	inch pounds
Inc.	incorporated
ind.	industrial
int.	internal
int./ext.	internal/external
I/O	input/output
IP	internet protocol
ISO	International Organization for Standardization
J	joule
JIS	Japanese Industry Standard
k	kilo (1000)
K	kelvin
kA	kiloampere
KB	kilobyte (2^{10} bytes)
kg	kilogram

kg/cm^2	kilograms per square centimeter
kgm	kilogram-meter
kg/m^3	kilograms per cubic meter
kHz	kilohertz
kJ	kilojoule
km	kilometer
kOhm, kΩ	kilo-ohm
kPa	kilopascal
kph	kilometers per hour
kV	kilovolt
kVA	kilovolt ampere
kVAR	kilovolt ampere reactive
kW	kilowatt
kWh	kilowatt-hour
kWm	kilowatt mechanical
kWth	kilowatt-thermal
L	liter
LAN	local area network
L x W x H	length by width by height
lb.	pound, pounds
lbm/ft^3	pounds mass per cubic feet
LCB	line circuit breaker
LCD	liquid crystal display
LED	light emitting diode
Lph	liters per hour
Lpm	liters per minute
LOP	low oil pressure
LP	liquefied petroleum
LPG	liquefied petroleum gas
LS	left side
L_{wa}	sound power level, A weighted
LWL	low water level
LWT	low water temperature
m	meter, milli (1/1000)
M	mega (10^6 when used with SI units), male
m^3	cubic meter
m^3/hr.	cubic meters per hour
m^3/min.	cubic meters per minute
mA	milliampere
man.	manual
max.	maximum
MB	megabyte (2^{20} bytes)
MCCB	molded-case circuit breaker
MCM	one thousand circular mils
meggar	megohmmeter
MHz	megahertz
mi.	mile
mil	one one-thousandth of an inch
min.	minimum, minute
misc.	miscellaneous
MJ	megajoule
mJ	millijoule
mm	millimeter
mOhm, mΩ	milliohm
MOhm, MΩ	megohm
MOV	metal oxide varistor
MPa	megapascal
mpg	miles per gallon
mph	miles per hour
MS	military standard
ms	millisecond
m/sec.	meters per second
mtg.	mounting
MTU	Motoren-und Turbinen-Union
MW	megawatt
mW	milliwatt
μF	microfarad
N, norm.	normal (power source)
NA	not available, not applicable
nat. gas	natural gas
NBS	National Bureau of Standards
NC	normally closed
NEC	National Electrical Code
NEMA	National Electrical Manufacturers Association
NFPA	National Fire Protection Association
Nm	newton meter
NO	normally open
no., nos.	number, numbers
NPS	National Pipe, Straight
NPSC	National Pipe, Straight-coupling
NPT	National Standard taper pipe thread per general use
NPTF	National Pipe, Taper-Fine
NR	not required, normal relay
ns	nanosecond
OC	overcrank
OD	outside diameter
OEM	original equipment manufacturer
OF	overfrequency
opt.	option, optional
OS	oversize, overspeed
OSHA	Occupational Safety and Health Administration
OV	overvoltage
oz.	ounce
p., pp.	page, pages
PC	personal computer
PCB	printed circuit board
pF	picofarad
PF	power factor
ph., ∅	phase
PHC	Phillips® head Crimptite® (screw)
PHH	Phillips® hex head (screw)
PHM	pan head machine (screw)
PLC	programmable logic control
PMG	permanent magnet generator
pot	potentiometer, potential
ppm	parts per million
PROM	programmable read-only memory
psi	pounds per square inch
psig	pounds per square inch gauge
pt.	pint
PTC	positive temperature coefficient
PTO	power takeoff
PVC	polyvinyl chloride
qt.	quart, quarts
qty.	quantity
R	replacement (emergency) power source
rad.	radiator, radius
RAM	random access memory
RBUS	RS-485 proprietary communications
RDO	relay driver output
ref.	reference
rem.	remote
Res/Coml	Residential/Commercial
RFI	radio frequency interference
RH	round head
RHM	round head machine (screw)
rly.	relay
rms	root mean square
rnd.	round
RO	read only
ROM	read only memory
rot.	rotate, rotating
rpm	revolutions per minute
RS	right side
RTDs	Resistance Temperature Detectors
RTU	remote terminal unit
RTV	room temperature vulcanization
RW	read/write
SAE	Society of Automotive Engineers
scfm	standard cubic feet per minute
SCR	silicon controlled rectifier
s, sec.	second
SI	*Systeme international d'unites,* International System of Units
SI/EO	side in/end out
sil.	silencer
SMTP	simple mail transfer protocol
SN	serial number
SNMP	simple network management protocol
SPDT	single-pole, double-throw
SPST	single-pole, single-throw
spec	specification
specs	specification(s)
sq.	square
sq. cm	square centimeter
sq. in.	square inch
SMS	short message service
SS	stainless steel
std.	standard
stl.	steel
tach.	tachometer
TB	terminal block
TCP	transmission control protocol
TD	time delay
TDC	top dead center
TDEC	time delay engine cooldown
TDEN	time delay emergency to normal
TDES	time delay engine start
TDNE	time delay normal to emergency
TDOE	time delay off to emergency
TDON	time delay off to normal
temp.	temperature
term.	terminal
THD	total harmonic distortion
TIF	telephone influence factor
tol.	tolerance
turbo.	turbocharger
typ.	typical (same in multiple locations)
UF	underfrequency
UHF	ultrahigh frequency
UIF	user interface
UL	Underwriter's Laboratories, Inc.
UNC	unified coarse thread (was NC)
UNF	unified fine thread (was NF)
univ.	universal
URL	uniform resource locator (web address)
US	undersize, underspeed
UV	ultraviolet, undervoltage
V	volt
VAC	volts alternating current
VAR	voltampere reactive
VDC	volts direct current
VFD	vacuum fluorescent display
VGA	video graphics adapter
VHF	very high frequency
W	watt
WCR	withstand and closing rating
w/	with
WO	write only
w/o	without
wt.	weight
xfmr	transformer

Notes

Notes

TP-7092 8/18

© 2018 by Kohler Co. All rights reserved.

KOHLER CO., Kohler, Wisconsin 53044
Phone 920-457-4441, Fax 920-459-1646
For the nearest sales/service outlet in the
US and Canada, phone 1-800-544-2444
KOHLERPower.com