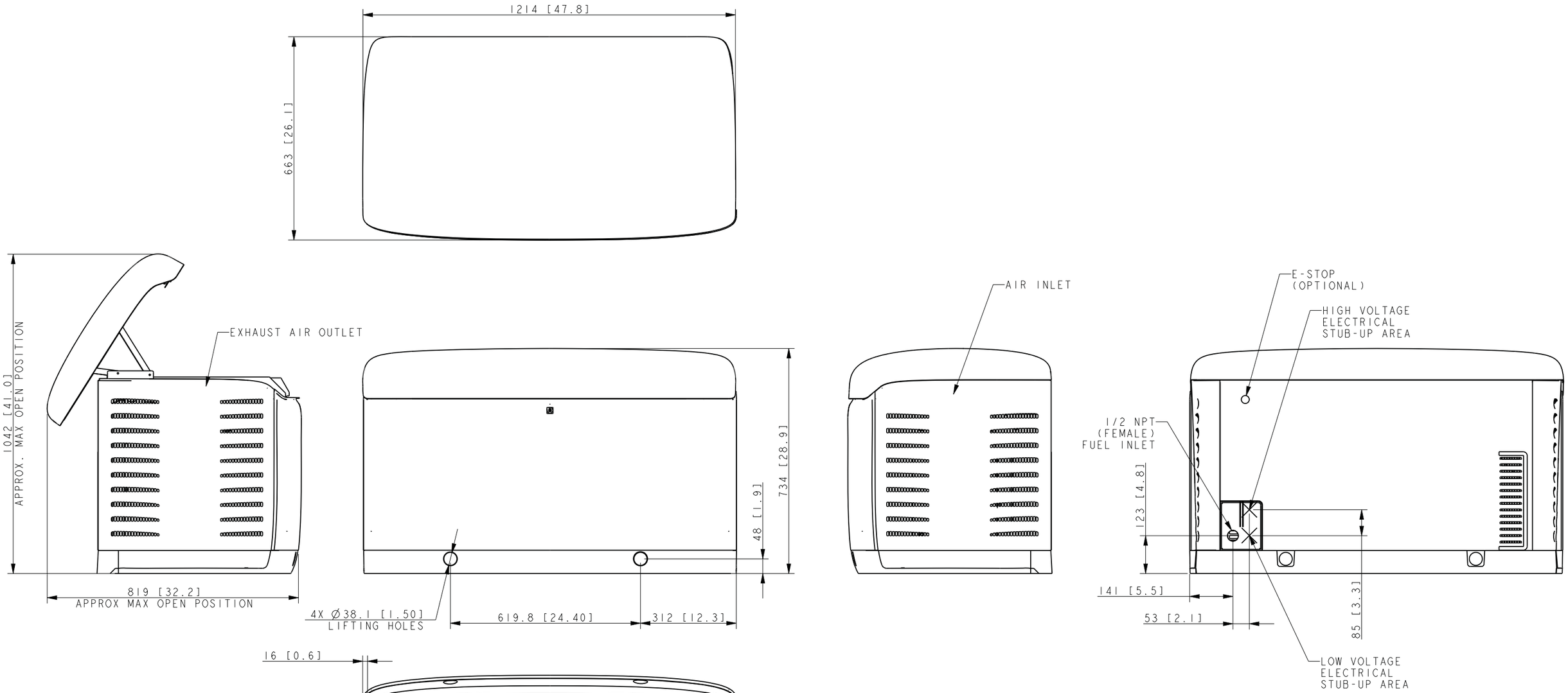

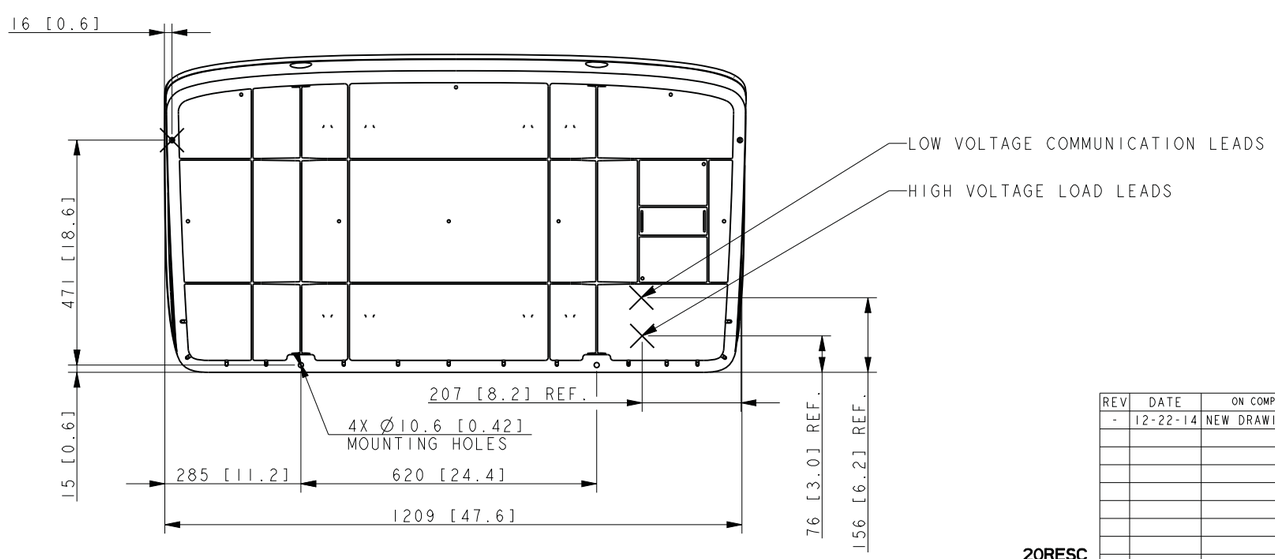

NOTE: DIMENSIONS IN [] ARE INCH EQUIVALENTS.

REV	DATE	ON COMPOSITE DWGS, SEE PART NO. FOR REVISION LEVEL	BY
-	12-22-14	NEW DRAWING [CT101550]	BGW

UNLESS OTHERWISE SPECIFIED -
1) DIMENSIONS ARE IN MILLIMETERS
2) TOLERANCES ARE:
X.XX ±
X.X ±
X ±
ANGLES ±

SURFACE FINISH ✓ MAX.

THIRD ANGLE PROJECTION

APPROVALS		DATE
DRAWN	BGW	12-22-14
CHECKED	KJB	12-22-14
APPROVED	KJB	12-22-14

KOHLER CO. METRIC PRO-E

POWER SYSTEMS, KOHLER, WI 53044 U.S.A.

THIS DRAWING IN DESIGN AND DETAIL IS KOHLER CO. PROPERTY AND MUST NOT BE USED EXCEPT IN CONNECTION WITH KOHLER CO. WORK. ALL RIGHTS OF DESIGN OR INVENTION ARE RESERVED.

TITLE **DIMENSION PRINT, 20RESC**

SCALE 0.16 | CAD NO. | SHEET 1 of 4

DWG NO. **ADV-8754** | **D**

20RESC

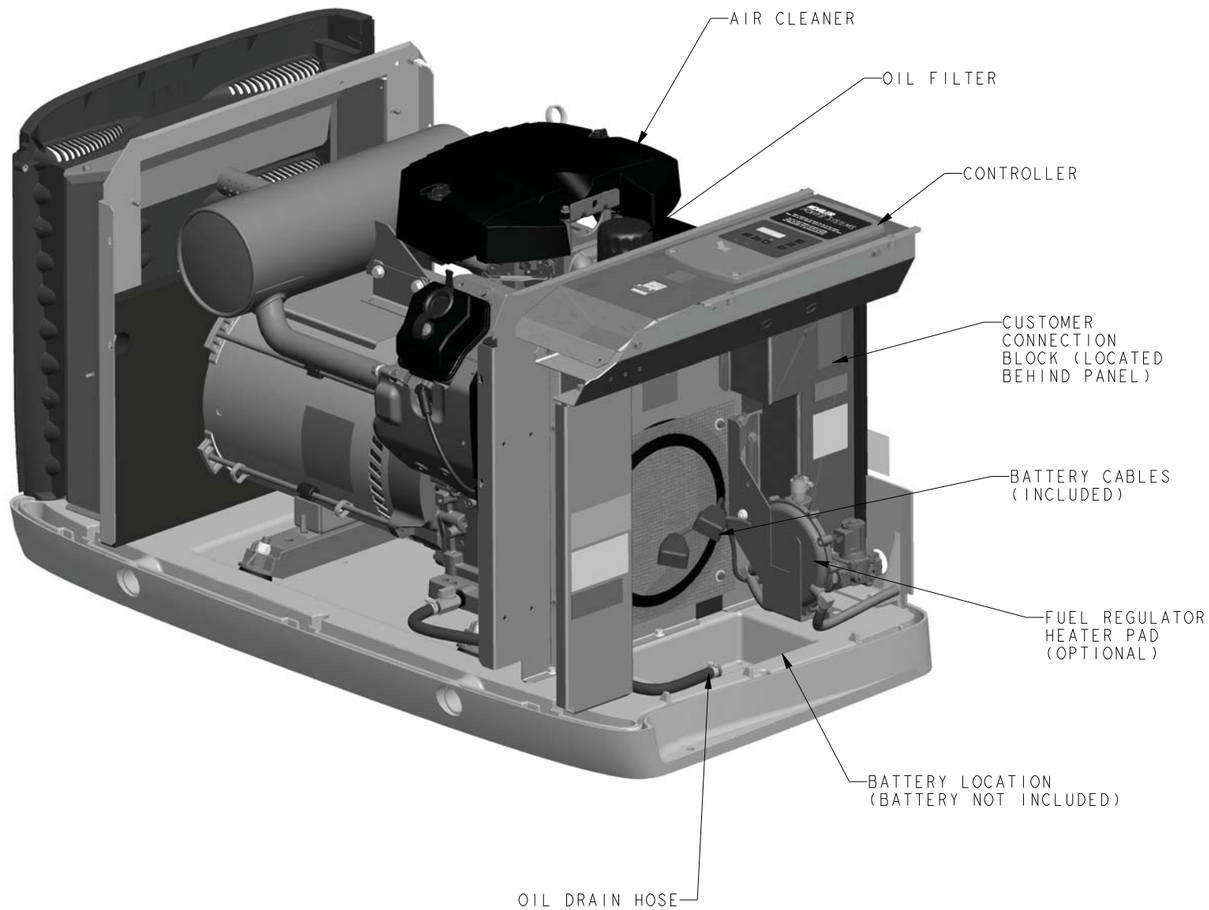

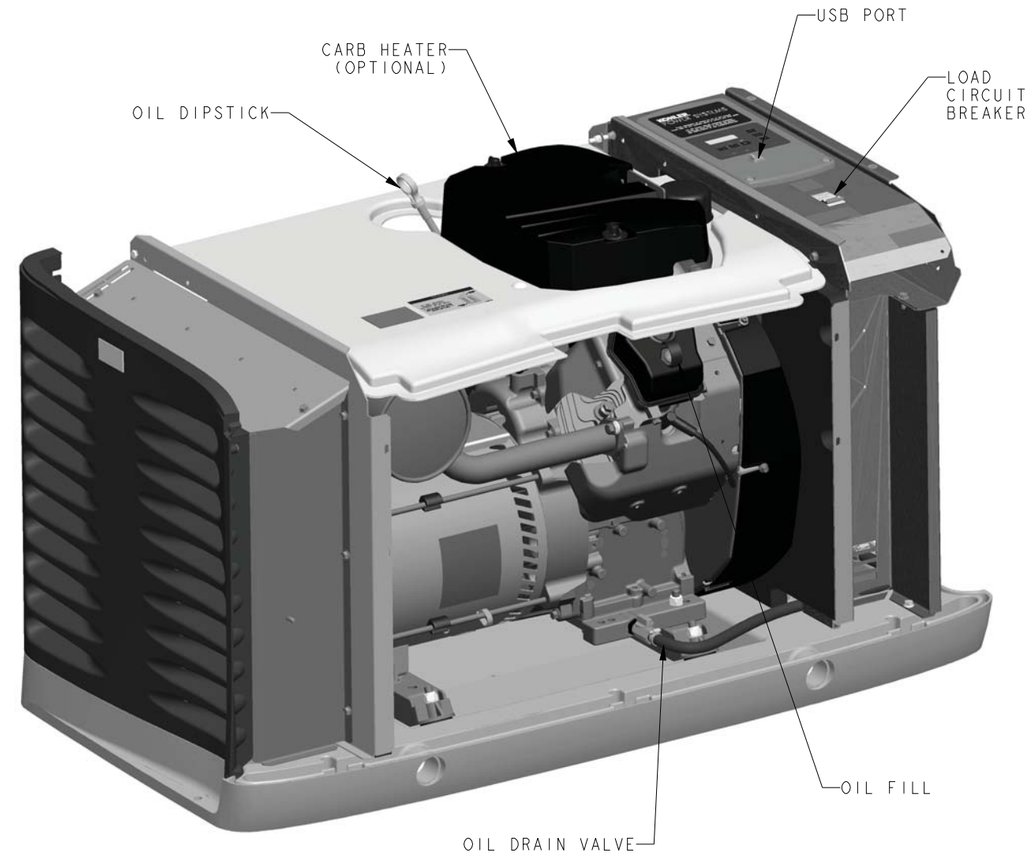

REV	DATE	ON COMPOSITE DWGS, SEE PART NO. FOR REVISION LEVEL	BY
-	12-22-14	NEW DRAWING [CT101550]	BGW

20RESC

UNLESS OTHERWISE SPECIFIED -
1) DIMENSIONS ARE IN MILLIMETERS
2) TOLERANCES ARE:
X.XX ±
X.X ±
X ±
ANGLES ±

SURFACE FINISH MAX.

THIRD ANGLE PROJECTION

APPROVALS		DATE
DRAWN	BGW	12-22-14
CHECKED	KJB	12-22-14
APPROVED	KJB	12-22-14

KOHLER CO. METRIC | PRO-E

POWER SYSTEMS, KOHLER, WI 53044 U.S.A.

THIS DRAWING IN DESIGN AND DETAIL IS KOHLER CO. PROPERTY AND MUST NOT BE USED EXCEPT IN CONNECTION WITH KOHLER CO. WORK. ALL RIGHTS OF DESIGN OR INVENTION ARE RESERVED.

TITLE

DIMENSION PRINT, 20RESC

SCALE 0.25 | CAD NO. | SHEET 2 of 4

DWG NO. **ADV-8754** | **D**

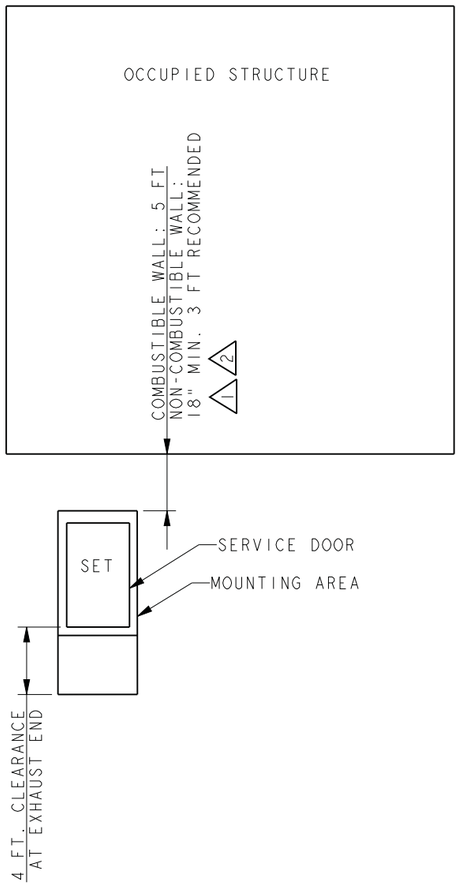

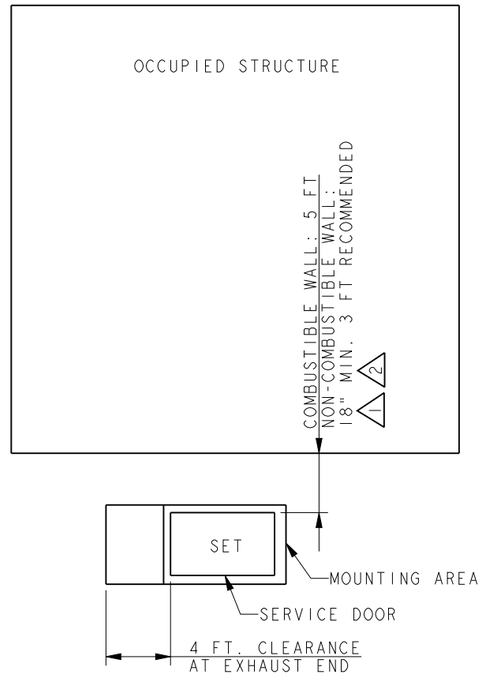

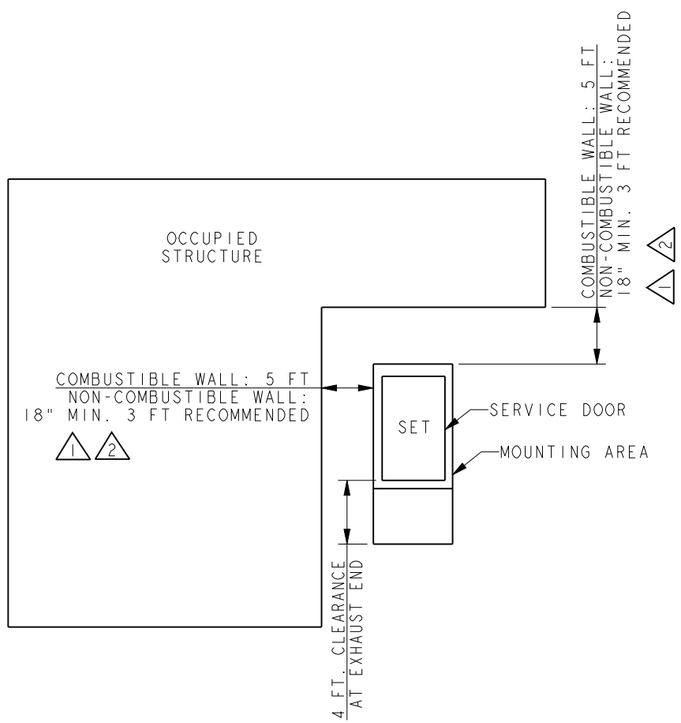

NOTE:

1. THE RECOMMENDED DISTANCE FROM A STRUCTURE IS DEPENDENT ON STATE AND LOCAL CODES. NFPA 37, STANDARDS FOR THE INSTALLATION AND USE OF STATIONARY COMBUSTION ENGINES AND GAS TURBINES, STATES THIS DISTANCE SHOULD BE AT LEAST 5 FEET FROM A COMBUSTIBLE MATERIAL.
2. FOR INSTALLATIONS NEAR NON-COMBUSTIBLE STRUCTURE, A MINIMUM DISTANCE OF 18" IS REQUIRED TO ENSURE PROPER GENERATOR COOLING.

ACCEPTABLE

1) EXHAUST IS AIMED AWAY OR PARALLEL TO STRUCTURE.
2) EXHAUST IS NOT DIRECTED AT PLAY AREAS, PATIOS OR OTHER AREAS WHERE PEOPLE CONGREGATE.
3) THE NEAREST WINDOW, VENT, DOOR OR SIMILAR STRUCTURE OPENING IS AT LEAST 5 FEET FROM THE EXHAUST END OF THE SET.
4) SET HAS PROPER OFFSET FROM STRUCTURE.
5) WINDOWS & DOORS ON ADJACENT WALLS ARE CLOSED.
6) FURNACE AND OTHER SIMILAR INTAKES ARE AT LEAST 10 FEET FROM EXHAUST END OF SET.
7) WEED BARRIER AND 3 INCH THICK GRAVEL BASE OR CONCRETE PAD LOCATED TO PREVENT GRASS & WEEDS FROM GROWING TOO CLOSE TO THE SET.
8) NO PLANTS, SHRUBS OR OTHER COMBUSTIBLES ALLOWED IN CLEARANCE AREA. (MINIMUM 4 FT. FROM EXHAUST END).
9) REFER TO OWNERS MANUAL FOR OTHER INSTALLATION CONSTRAINTS.
10) NO PLANTS, SHRUBS, OR OTHER COMBUSTIBLES ALLOWED WITHIN 18" OF AIR INTAKE.

20RESC SINGLE UNIT CONFIGURATION

REV	DATE	ON COMPOSITE DWGS, SEE PART NO. FOR REVISION LEVEL	BY
-	12-22-14	NEW DRAWING [CT101550]	BGW

UNLESS OTHERWISE SPECIFIED -
1) DIMENSIONS ARE IN MILLIMETERS
2) TOLERANCES ARE:
X.XX ±
X.X ±
X ±
ANGLES ±
SURFACE FINISH MAX.
THIRD ANGLE PROJECTION

APPROVALS		DATE
DRAWN	BGW	12-22-14
CHECKED	KJB	12-22-14
APPROVED	KJB	12-22-14

KOHLER CO. METRIC PRO-E

POWER SYSTEMS, KOHLER, WI 53044 U.S.A.

THIS DRAWING IN DESIGN AND DETAIL IS KOHLER CO. PROPERTY AND MUST NOT BE USED EXCEPT IN CONNECTION WITH KOHLER CO. WORK. ALL RIGHTS OF DESIGN OR INVENTION ARE RESERVED.

TITLE **DIMENSION PRINT, 20RESC**

SCALE 0.40 | CAD NO. | SHEET 3 of 4

DWG NO. **ADV-8754** | **D**

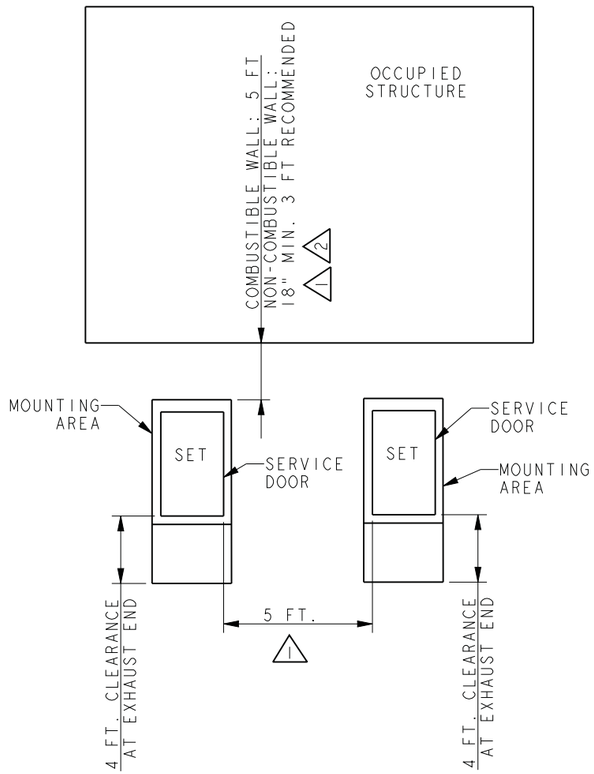

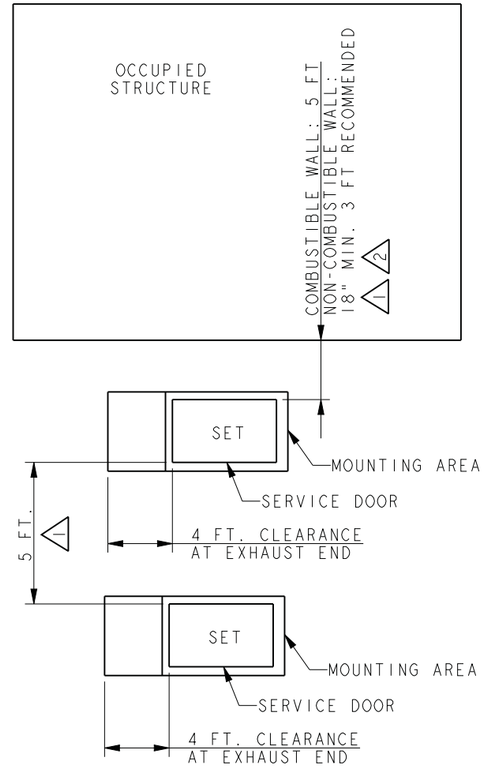

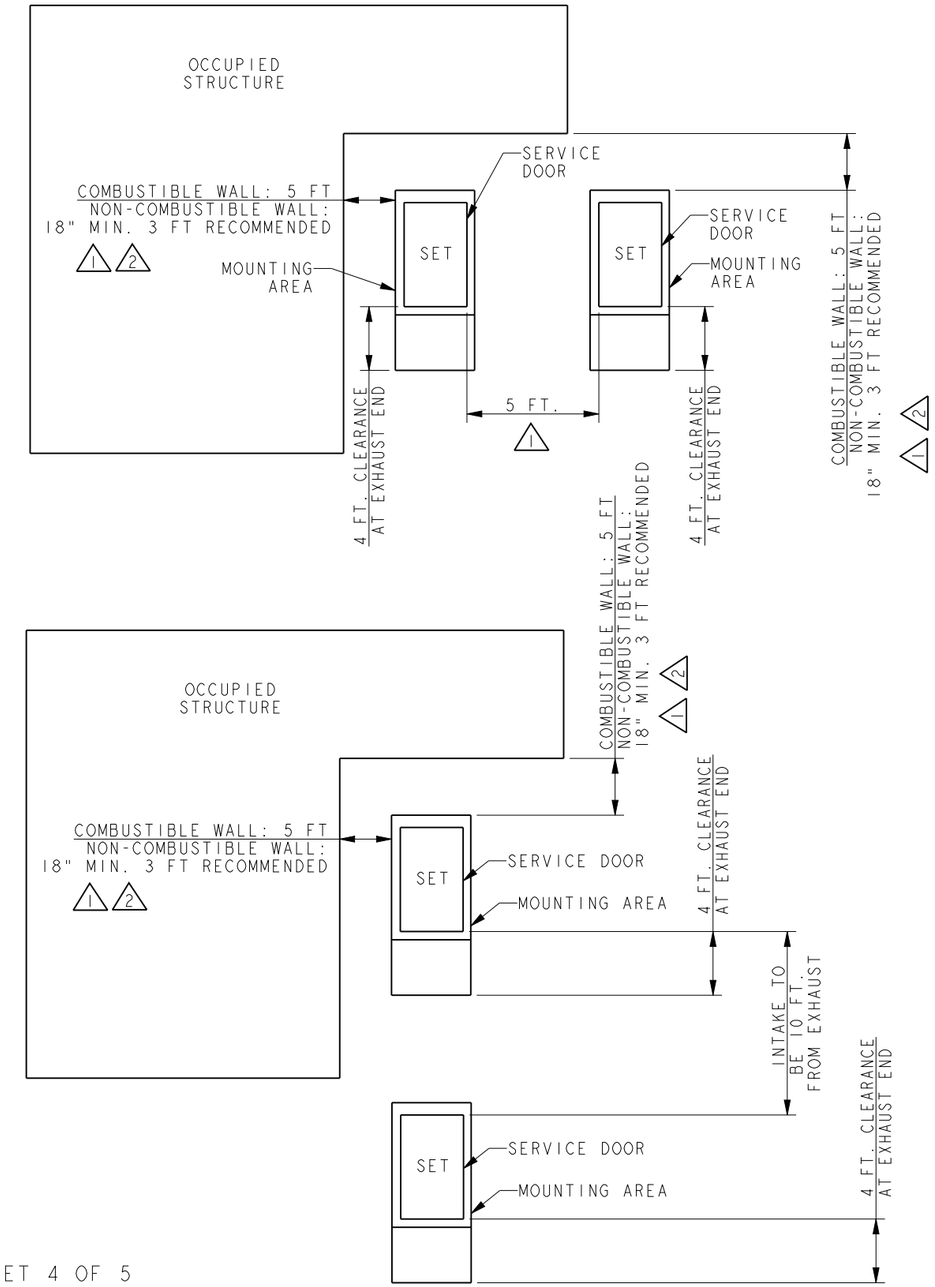

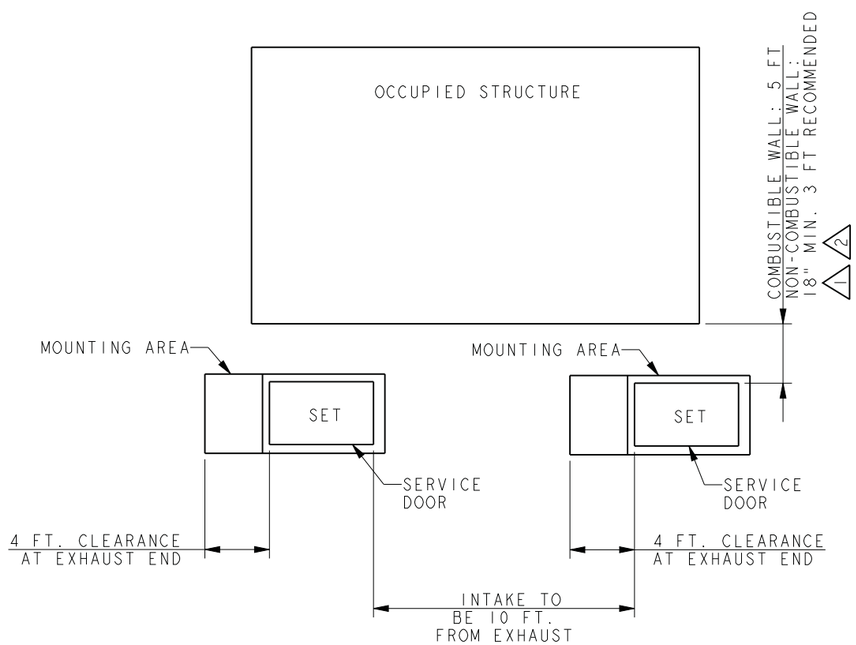

NOTE:
APPLY NOTES ON SHEET 4 OF 5
TO SHEET 5 OF 5.

REV	DATE	ON COMPOSITE DWGS, SEE PART NO. FOR REVISION LEVEL	BY
-	12-22-14	NEW DRAWING [CT101550]	BGW

UNLESS OTHERWISE SPECIFIED -
1) DIMENSIONS ARE IN MILLIMETERS
2) TOLERANCES ARE:
X.XX ± 0.25
X.X ± 1.0
X ± 1.5
ANGLES ± 0° 30'
SURFACE FINISH MAX.
THIRD ANGLE PROJECTION

APPROVALS		DATE
DRAWN	BGW	12-22-14
CHECKED	KJB	12-22-14
APPROVED	KJB	12-22-14

KOHLER CO. METRIC PRO-E
POWER SYSTEMS, KOHLER, WI 53044 U.S.A.

THIS DRAWING IN DESIGN AND DETAIL IS KOHLER CO. PROPERTY AND MUST NOT BE USED EXCEPT IN CONNECTION WITH KOHLER CO. WORK. ALL RIGHTS OF DESIGN OR INVENTION ARE RESERVED.

TITLE
DIMENSION PRINT, 20RESC

SCALE 0.16 | CAD NO. | SHEET 4 of 4
DWG NO. ADV-8754 | D

20RESC PARALLEL UNIT CONFIGURATION