Please read and save this Repair Parts Manual. Read this manual and the General Operating Instructions carefully before attempting to assemble, install, operate or maintain the product described. Protect yourself and others by observing all safety information. The Safety Instructions are contained in the General Operating Instructions. Failure to comply with the safety instructions accompanying this product could result in personal injury and/or property damage! Retain instructions for future reference. AMT reserves the right to discontinue any model or change specifications at any time without incurring any obligation.

©2016 AMT Pump Company, A Subsidiary of The Gorman-Rupp Company, All Rights Reserved.

Periodic maintenance and inspection is required on all pumps to insure proper operation. Unit must be clear of debris and sediment. Inspect for leaks and loose bolts. Failure to do so voids warranty.

IPT Series 3P9X & 3S9X

Refer to pump manual 1808-633-00 for General Operating and Safety Instructions.

DESCRIPTION

IPT engine driven pumps are commercial duty, centrifugal, self-priming (to 25 ft. vertical lift after initially filling casing with liquid), portable units. Pumps are equipped with industry standard mechanical shaft seals. Iron suction and discharge manifolds are standard male NPT threads for direct connection to swivel hose fitting with gasket, or standard NPT pipe fittings. Discharge manifold can be rotated 180˚ (in 90˚ increments); left side discharge, front discharge or right side discharge. Pump components will handle liquids with a temperature range of 40˚ to 180˚F (4˚ to 82˚ C). Pump only nonflammable liquids compatible with pump component materials. Standard pumps are close coupled to internal combustion engines manufactured by Honda, Briggs & Stratton, & Hatz. All engines meet current EPA emissions requirements, per the engine manufacturer. Pumps (70cc and larger) are preempted from emissions regulation in California. Bearing housing/pedestal drive pumps are also available for direct or drive belt connection.

SPECIFICATIONS

Standard units are constructed of cast aluminum with cast iron impeller (“P” series - cast aluminum), cast iron volute, and cast iron suction and discharge manifolds. Standard shaft seals for 3S pumps are Viton with silicon carbide wear faces, for 3P pumps are Viton with silicon carbide/carbon wear faces. All models feature EPDM/EPR O-rings, Flapper Valve & Gaskets.

IMPORTANT: Not for use with petroleum based liquids.

UNPACKING

1. Remove pump from packaging materials.
2. Package should include: pump/engine mounted in roll frame, strainer, general/safety manual, specification/parts manual, engine manual. Pump kits: Pump end, general safety manual, and specification/parts manual.
3. Make sure all components are accounted for before discarding packaging material.
4. Inspect all components for damage.
5. No assembly is required for standard engine driven pumps. Pump kits must be constructed on appropriate engine.

PREPARING UNIT FOR OPERATION

Placing Pump

1. Always place the pump as close to the liquid source as possible. Priming efficiency and pump output will be reduced if a long (>25 ft.) suction line is used. Keep all lines as short and straight as possible. Avoid any sharp bends. Suction line cannot have loops or high spots, hose must have a gradual slope up to pump.
2. Pump/engine must be located on a solid level surface.

Connecting Hose or Piping

1. All suction hose/piping connection must be air tight. Pump will not prime if there are any air leaks in the suction line or connections.
2. Use only non-collapsible hose or pipe on the suction. If collapsible hose is used on the discharge, the end of discharge line is submerged in liquid, or a check valve is placed in the discharge line, a means of venting air out of the pump during the priming cycle must be employed.
3. Always use a suction strainer to keep large debris out of the pump. Position strainer well below liquid surface and on a bed of rocks or other suitable surface. If possible tie strainer up so it is suspended off pit bottom. As a last resort tie the strainer in a large submerged bucket if bottom of water source is too soft or muddy.

Before Starting Engine

1. Fill engine crankcase with oil. Follow engine manufacturer recommendations for service classification and viscosity of oil as detailed in engine manual.
2. Fill fuel tank with clean, fresh, fuel. Follow engine manufacturer’s guidelines as listed in engine manual.
3. Always fill pump with liquid through the priming port located on top of the discharge manifold or pump casing before starting engine. Remember the pump is self-priming only when the pump is filled with liquid.

Operation

1. Make certain pump is filled with liquid before starting engine. Failure to do so will result in damage to the mechanical shaft seal. Never run pump dry

⚠WARNING

DO NOT USE PUMP IN EXPLOSIVE ATMOSPHERE. DO NOT PUMP VOLATILE OR FLAMMABLE LIQUIDS.

2. Follow engine manufacturer’s starting procedure. Run engine at full speed during priming. After pump has primed speed may be reduced to regulate pump output.
3. Pump will self-prime to a vertical height of 10’ in less than one minute, 20’ in 2 minutes, 25’ may take up to 4 minutes. If pump doesn’t prime: Check for air leaks, move pump closer to liquid, shorten suction line, remove loops and high spots from suction line, refill pump with liquid, see troubleshooting guide in this manual.
4. Always allow engine to cool before refueling.

After Pump is Shut Down

1. Always flush the pump out at the end of operation if the liquid being pumped may leave a solid or sticky residue inside of pump, or if a buildup of sediment inside the pump is expected.
2. Always drain pump completely of liquid if there is a chance of freezing.

Storing Pump

1. When pump is out of service for an extended period of time, completely drain liquid from casing, store pump in a dry, protected, well-ventilated area.
2. Add fuel stabilizer to engine fuel tank or drain fuel from tank. Turn fuel tank

IPT Series 3P9X & 3S9X Pumps

valve to off position.

COMPLETE PUMP ASSEMBLY PROCEDURE

Reference Repair/Replacement Part Exploded View and Lists

NOTE: Do not use petroleum based lubricants with EPDM rubber seal parts and O-rings. Petroleum based products will damage EPDM components.
NOTE: Apply a small amount of anti-seize lubricant to internal threads of stub shaft. If petroleum based anti-seize lubricant is used do not allow it to contact EPDM components.

Install Adapter

1. Lay engine (Ref. No. B6) down on recoil starter with PTO shaft straight up.
2. Locate adapter (Ref. No. B3) on engine. Fasten with screws (Ref. No. B4). Tighten screws to 12 ft-lb torque.

Install Seal Plate & Bracket

1. Lay seal plate (Ref. No. B1) down on a stable surface with machined face up.
2. Lubricate rubber cup or o-ring of shaft seal seat (Ref. No. A11) with soapy water.
3. Locate seal seat in seal plate bore with finished lap surface of seat up. Press seal seat firmly into seal plate until fully seated.
4. Locate seal plate onto adapter. Align seal plate outside diameter with adapter diameter.
5. Install o-ring (Ref. No. D2) into bore of bracket (Ref. No. A1).
6. Install bracket onto adapter. Align bracket feet with engine mounting surface.
7. Install screws (Ref. No. B5). Tighten screws to 12 ft-lb torque.

Install Studs into Bracket

1. Install stud (Ref. No. A2), the longer stud, into threaded hole at 7:30 (lower left) position in bracket. Use a liquid thread locker similar to Loctite.
2. Install stud (Ref. No. A3), the shorter stud, into threaded hole at 2:30 (upper right) position in bracket. Use a liquid thread locker similar to Loctite.
3. Secure studs in position with a lock nut (Ref. No. A4).

Install Shaft Sleeve

1. Install shaft sleeve (Ref. No. A9) on engine shaft. Locate chamfered id towards engine. Make certain end of sleeve mates against shaft shoulder.
2. Lubricate inside diameter of rubber portion of shaft seal head (Ref. No. A10) with soapy water. Locate seal head onto shaft sleeve with seal head rotating ring face towards seal seat installed in seal plate. Slide seal head onto shaft sleeve until seal faces touch.
3. Alternate procedure: mark height of seal seat face on the shaft sleeve with a pencil or marker. Remove shaft sleeve from shaft. Slide seal head onto shaft sleeve until rotating face is at marked height. Re-install shaft sleeve with seal head onto engine shaft.
4. Install seal head spring if it was removed.

Install Impeller (3S) Semi-Open Impeller

1. Install shims (Ref. No. A8) onto engine shaft.
2. Install impeller (Ref. No. A7) onto engine shaft. Tighten clockwise until fully seated against shims and shaft sleeve.
3. Install volute (Ref. No. A5) onto studs in bracket. Slide on, locate volute in bracket machined locating diameter. Hold volute against the bracket

⚠ CAUTION

Disable engine ignition so engine cannot start when engine shaft is rotated.

4. Rotate engine shaft. If impeller installed on engine shaft spins freely add shims until it scraps against volute wear face. If impeller scrapes volute wear face or if shaft will not turn because impeller is tight against volute wear face proceed to next step.
5. Remove a (one) shim. Try to rotate engine shaft again. Repeat process of removing one shim at a time and trying to rotate engine shaft until impeller is clear and engine shaft turns with no interference.
6. Clearance between the impeller face and the volute face should be set to 0.01” to 0.03”.
7. Install hex nuts (Ref. No. A6) fastening volute to bracket. Tighten nuts to 50 in-lb torque.

Install Impeller (3P) Closed Impeller

1. Install impeller (Ref. No. A7) onto engine shaft. Tighten clockwise until fully seated against shaft sleeve.
2. Install volute (Ref. No. A5) onto studs in bracket. Slide on, locate volute in bracket machined locating diameter. Install hex nuts (Ref. No. A6) fastening volute to bracket. Tighten nuts to 50 in-lb torque.

⚠ CAUTION

Disable engine ignition so engine cannot start when engine shaft is rotated.

3. Rotate engine shaft. Impeller should rotate freely. Slight rubbing is acceptable.
4. If impeller is tight against volute or drag is considerable loosen hex nuts holding volute. Shift volute to reduce or eliminate binding. Tighten the hex nuts.

Install Casing (All Pumps)

1. Install check valve (Ref. No. D1) on end of volute. Orient hinge of flapper at the top 12:00 position.
2. Install #378 o-ring (Ref. No. D3) onto casing (Ref. No. C1).
3. Install six screws (Ref. No. C2) through casing ears. Fix screws in position by sliding a #109 o-ring (Ref. No. C3) over each screw into casing ear back bore.
4. Install a #117 o-ring (Ref. No. D4) onto a plug (Ref. No. D5). Lubricate o-ring with soapy water. Install plug into casing drain port.
5. Position casing onto bracket, locate casing o-ring nose into bracket front bore. Slide casing into bore until it bottoms. Tighten all six hex screws in a diagonal pattern fastening casing to bracket. Tighten screws to 100 in-lb torque.
6. Check operation of check valve. Check valve must swing freely.

Install Suction Flange

1. Position a flange gasket (Ref. No. D6) on the casing suction flange.
2. Position suction flange (Ref. No. C4) on flange gasket. Install four screws (Ref. No. C5) tighten to 100 in-lb torque. Alternate tightening screws in a cross pattern to reduce the chance of crushing the flange gasket.

Install Discharge Manifold

1. Position a flange gasket (Ref. No. D6) on the casing discharge flange.
2. Position discharge manifold (Ref. No. C6) on flange gasket. Install four screws (Ref. No. C7) tighten to 100 in-lb torque. Alternate tightening screws in a cross pattern to reduce the chance of crushing the flange gasket.
3. Install a #117 o-ring (Ref. No. D4) onto a plug (Ref. No. D5). Lubricate o-ring with soapy water. Install plug into discharge manifold fill port.

IPT Series 3P9X & 3S9X Pumps

REPAIR AND MAINTENANCE INSTRUCTIONS

Shaft Seal Replacement

1. Loosen six screws (Ref. No. C2) until they disengage the bracket (Ref. No. A1). Remove casing (Ref. No. C1) from bracket.
2. Remove hex nuts (Ref. No. A6). Remove volute (Ref. No. A5).
3. Remove impeller (Ref. No. A7). Impeller unthreads counter-clockwise.
4. Remove impeller shims (Ref. No. A8) if so equipped (3S pumps).
5. Remove shaft sleeve (Ref. No. A9)/seal head (Ref. No. A10) assembly. Remove seal head from shaft sleeve. Discard old seal. Thoroughly clean shaft sleeve. If it is damaged or the old elastomer can't be removed replace with a new shaft sleeve.
6. Loosen bracket foot screws (Ref. No. E5). Remove screws (Ref. No. B5). Remove bracket (Ref. No. A1)
7. Remove seal plate (Ref. No. B1).
8. Pry old seal seat (Ref. No. A11) from seal plate. Discard old seal. Thoroughly clean the seal seat bore.
9. Replace any worn or damaged o-rings.
10. Rebuild pump with a new shaft seal. Follow complete pump assembly procedure.

Cleaning Pump

1. Remove casing assembly from bracket.
2. Clean-out any debris.
3. Remove hex nuts fastening volute to bracket. Remove volute.
4. Clean-out any debris from volute.
5. (3S pump) Clean any debris from impeller vanes.

NOTE: 3P pumps are equipped with a closed impeller. Closed impellers are not suited for use with liquid containing solids that are large enough to clog in the closed impeller passages. Closed impellers are difficult to clean.

6. (3P pump) Remove impeller. Impeller unthreads counterclockwise. Run a heavy wire through impeller passages to dislodge any accumulated debris.
7. Reassemble the pump.

Periodic Maintenance

1. Clean outside of pump and engine to remove accumulated dirt, oil and grime.
2. Maintain engine according to engine manufacturer's recommendations.
3. It is recommended that a replacement shaft seal and seal kit be kept on hand at all times.
4. Check for leaks during pump operation. Leaks may occur at shaft seal, casing to bracket connection, suction and discharge manifold connections, and through pump casing and bracket. Investigate and repair any leaks immediately.

NOTE: Engine failure due to water intrusion into crankcase caused by a leaking seal will not be covered by engine or pump warranty.

5. Mechanical shaft seals are a wear item and require periodic replacement. Seal life is dependent on many factors including liquid pumped, sediment type, operating point, and suction conditions.
6. Inspect for loose fasteners. Tighten any loose fasteners immediately.

BEARING HOUSING REPLACEMENT FOR PEDESTAL MODELS

1. Remove the front pump assembly as described under Shaft Seal Replacement.
2. Disassemble the pedestal drive kit (Ref. No. B3) from pump adapter by removing the four screws and O-rings.
3. Remove pedestal drive kit (Ref. No. B3) and replace entire unit as recommended by factory to insure proper operation.
4. Reverse steps 1 thru 3 to reassemble pump.

IMPORTANT: After pump is assembled, it is necessary to rotate pump shaft by hand to check for striking of the impeller. If striking or rubbing occurs, adjust impeller shims as required (See Shim Adjustment).

IPT Series 3P9X & 3S9X Pumps

Problem	Possible Cause(s)	Corrective Action
Pump fails to prime	1 Pump not filled with liquid	1 Add liquid to pump through priming port
	2 Air leak at suction line connection	2 Add sealant to connection
	3 Worn suction connection gasket	3 Replace suction gasket
	4 Leaking suction line	4 Inspect, repair or replace suction line
	5 Engine speed too low	5 Run engine at maximum speed
	6 Worn or broken volute or impeller	6 Replace parts as required
	7 Leaking/worn mechanical shaft seal	7 Replace mechanical shaft seal
	8 Clogged suction strainer/line	8 Clean strainer and suction line
	9 Suction lift too great (25 ft. max)	9 Reduce lift
	10 Suction line too long	10 Reduce length to under 30 feet
	11 Pump is air locked	11 Vent pump discharge through priming port
Priming remedies that will NOT work:		
	Holding suction line out of liquid source and forcing liquid into end while pump is running.	
	Pinching off the discharge line to “build up pressure”.	
	Holding hand against end of suction line or pump suction port to “feel” for suction.	
Follow above priming troubleshooting guide.		
If pump still will not prime after all corrective action is exhausted, check pump priming capacity by:		
	1. Install a vacuum gauge on capped suction port. Gauge to suction port connection must be 100% air tight.	
	2. Fill pump casing completely with water.	
	3. Run pump at full speed, some water will be thrown out of discharge.	
	4. Vacuum gauge should register 18-22 inches of mercury within a minute or so.	
	a. If vacuum registers below 18 in of hg check gauge to pump connection for air leaks, inspect/replace volute, impeller and shaft seal as required.	
	b. If vacuum gauge value is within range pump is working correctly. The problem is not the pump.	
Reduced capacity or discharge pressure	1. Clogged strainer or lines	1. Clean strainer, suction and discharge lines
	2. High friction loss in line	2. Remove kinks and elbows, reduce length
	3. Discharge head too high	3. Lower end of discharge line, remove nozzles
	4. Engine speed too low	4. Increase engine speed
	5. Drop in engine output	5. Repair engine
	6. Clogged impeller	6. Remove clog
	7. Worn/damaged impeller or volute	7. Replace parts as required
Pump will not work/engine will not turn over	1. Clogged pump	1. Remove clog between impeller and volute
	2. Pump parts rusted together	2. Disassemble pump, free parts
	3. Damaged impeller or volute	3. Replace volute or impeller
	4. Engine seized	4. Remove pump from engine, check engine itself
Pump will not work/engine runs	1. Impeller stripped/key sheared	1. Disassemble pump, replace parts/engine
	2. Pump impeller/volute clogged	2. Clean pump
	3. Will not prime	3. See Priming troubleshooting section
	4. Insufficient liquid supply	4. Increase liquid supply

IPT Series 3P9X & 3S9X Pumps

For Repair Parts contact dealer where pump was purchased.

Please provide following information:
-Model Number
-Serial Number (if any)

Part description and number as shown in parts list

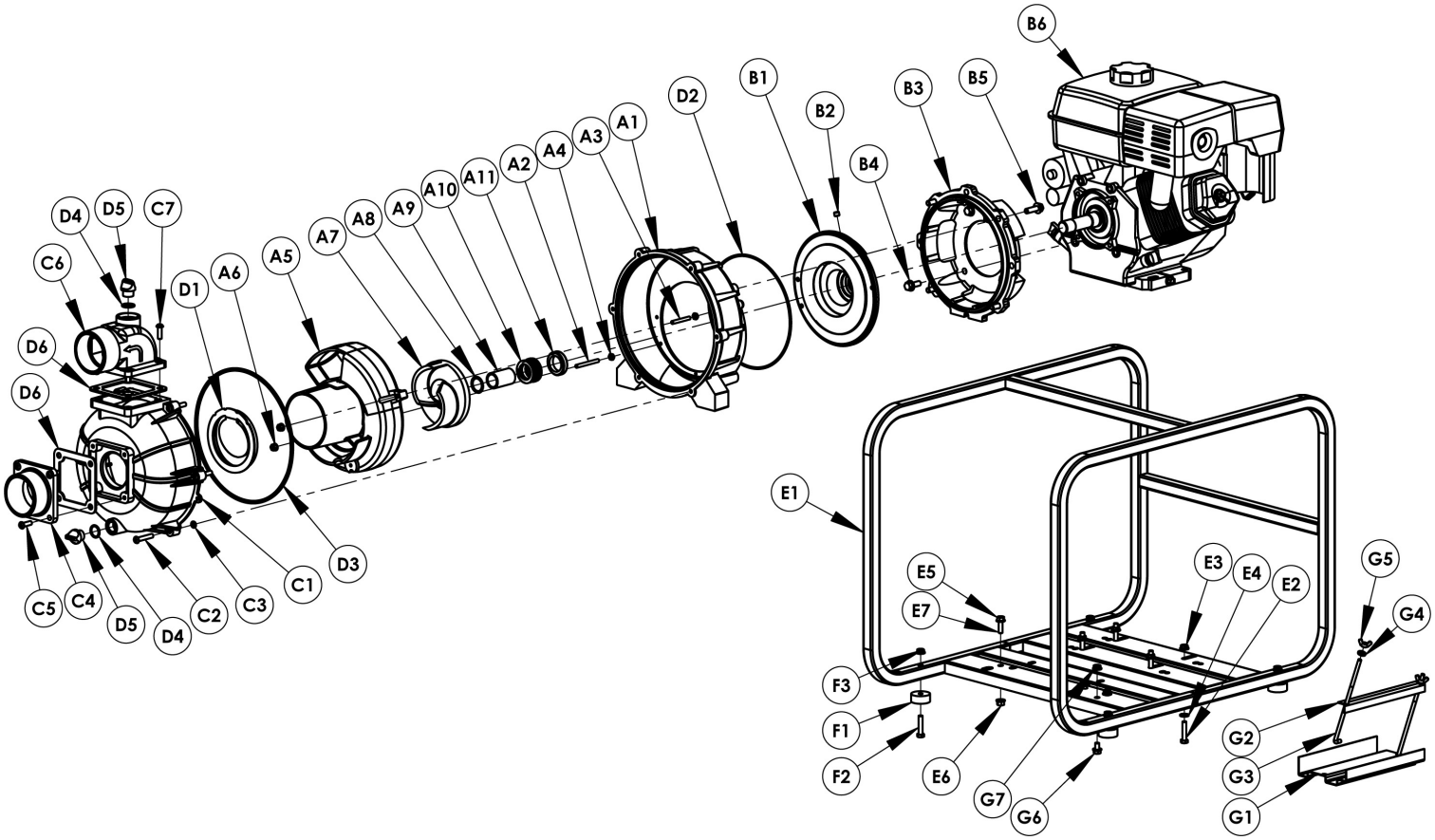

Figure 1 - Repair Parts Illustrations

Repair Parts List

Ref No.	Engine Description	Part Number for Models: Vanguard 10 3P9XAR	Honda GX270 3P9XHR	Hatz 1B40 3P9XZR	Yanmar L100 3P9XYR	Pedestal 3P9XP	Vanguard 10 3S9XAR	Honda GX270 3S9XHR	Hatz 1B40 3S9XZR	Yanmar L100 3S9XYR	Pedestal 3S9XP	Qty
A1	Bracket Kit	3P9X-030-96	3P9X-030-96	3P9X-030-96	3P9X-030-96	3P9X-030-96	3S9X-030-96	3S9X-030-96	3S9X-030-96	3S9X-030-96	3S9X-030-96	1
	(includes Ref. Nos. A1, A2, A3 , A4 & B5)											
A2	1/4-20x2.5" Stud	Incl. w/Ref. A1	Incl. w/Ref. A1	Incl. w/Ref. A1	Incl. w/Ref. A1	Incl. w/Ref. A1	Incl. w/Ref. A1	Incl. w/Ref. A1	Incl. w/Ref. A1	Incl. w/Ref. A1	Incl. w/Ref. A1	1
A3	1/4-20x2.5" Stud	Incl. w/Ref. A1	Incl. w/Ref. A1	Incl. w/Ref. A1	Incl. w/Ref. A1	Incl. w/Ref. A1	Incl. w/Ref. A1	Incl. w/Ref. A1	Incl. w/Ref. A1	Incl. w/Ref. A1	Incl. w/Ref. A1	1
A4	1/4-20 Jam Nut	Incl. w/Ref. A1	Incl. w/Ref. A1	Incl. w/Ref. A1	Incl. w/Ref. A1	Incl. w/Ref. A1	Incl. w/Ref. A1	Incl. w/Ref. A1	Incl. w/Ref. A1	Incl. w/Ref. A1	Incl. w/Ref. A1	2
A5	Volute Kit	3P9X-150-95	3P9X-151-95	3P9X-151-95	3P9X-151-95	3P9X-151-95	3S9X-150-95	3S9X-150-95	3S9X-150-95	3S9X-150-95	3S9X-150-95	1
	(includes Ref. Nos. A5 & A6)											
A6	1/4-20 Hex Nut	Incl. w/Ref. A5	Incl. w/Ref. A5	Incl. w/Ref. A5	Incl. w/Ref. A5	Incl. w/Ref. A5	Incl. w/Ref. A5	Incl. w/Ref. A5	Incl. w/Ref. A5	Incl. w/Ref. A5	Incl. w/Ref. A5	2
A7	Impeller Kit	3P9X-010-96	3P9X-011-96	3P9X-011-96	3P9X-011-96	3P9X-012-96	3S9X-010-95	3S9X-011-95	3S9X-011-95	3S9X-011-95	3S9X-012-95	1
	(includes Ref. Nos. A7, A8 & A9)											
A8	Shim	N/A	N/A	N/A	N/A	N/A	Incl. w/Ref. A7	Incl. w/Ref. A7	Incl. w/Ref. A7	Incl. w/Ref. A7	Incl. w/Ref. A7	1
A9	Shaft Sleeve	Incl. w/Ref. A7	Incl. w/Ref. A7	Incl. w/Ref. A7	Incl. w/Ref. A7	Incl. w/Ref. A7	Incl. w/Ref. A7	Incl. w/Ref. A7	Incl. w/Ref. A7	Incl. w/Ref. A7	Incl. w/Ref. A7	1
A10 & A11	Shaft Seal Kit	1646-421-00	1646-421-00	1646-421-00	1646-421-00	1646-421-00	1646-323-00	1646-323-00	1646-323-00	1646-323-00	1646-323-00	1
B1	Seal Plate Kit	3S9X-020-95	3S9X-020-95	3S9X-020-95	3S9X-020-95	3S9X-020-95	3S9X-020-95	3S9X-020-95	3S9X-020-95	3S9X-020-95	3S9X-020-95	1
	(includes Ref. Nos. B1 & B2)											
B2	1/8" NPT Plug	Incl. w/Ref. B1	Incl. w/Ref. B1	Incl. w/Ref. B1	Incl. w/Ref. B1	Incl. w/Ref. B1	Incl. w/Ref. B1	Incl. w/Ref. B1	Incl. w/Ref. B1	Incl. w/Ref. B1	Incl. w/Ref. B1	1
B3	Adapter Kit	3S9X-033-96	3S9X-033-96	3S9X-034-96	3S9X-034-96	3P9X-035-96	3S9X-033-96	3S9X-033-96	3S9X-034-96	3S9X-034-96	3P9X-035-96	1
	(includes Ref. Nos. B3, B4 & B5)											
B4	3/8-16x1" Screw	Incl. w/Ref. B3	Incl. w/Ref. B3	Incl. w/Ref. B3	Incl. w/Ref. B3	Incl. w/Ref. B3	Incl. w/Ref. B3	Incl. w/Ref. B3	Incl. w/Ref. B3	Incl. w/Ref. B3	Incl. w/Ref. B3	4
B4	M8x35mm Screw	Incl. w/Ref. B3	Incl. w/Ref. B3	Incl. w/Ref. B3	Incl. w/Ref. B3	Incl. w/Ref. B3	Incl. w/Ref. B3	Incl. w/Ref. B3	Incl. w/Ref. B3	Incl. w/Ref. B3	Incl. w/Ref. B3	4
B5	3/8-16x2" Screw	Incl. w/Ref. A1	Incl. w/Ref. A1	Incl. w/Ref. A1	Incl. w/Ref. A1	Incl. w/Ref. A1	Incl. w/Ref. A1	Incl. w/Ref. A1	Incl. w/Ref. A1	Incl. w/Ref. A1	Incl. w/Ref. A1	4
	3/8-16 Hex Nut (not shown)	Incl. w/Ref. A1	Incl. w/Ref. A1	Incl. w/Ref. A1	Incl. w/Ref. A1	Incl. w/Ref. A1	Incl. w/Ref. A1	Incl. w/Ref. A1	Incl. w/Ref. A1	Incl. w/Ref. A1	Incl. w/Ref. A1	4
B6	Engine	1639-060-00	1639-026-00	1630-040-0	Discontinued	N/A	1639-060-00	1639-026-00	1630-040-00	Discontinued	N/A	1
C1	Casing Kit	3S5X-005-96	3S5X-005-96	3S5X-005-96	3S5X-005-96	3S5X-005-96	3S5X-005-96	3S5X-005-96	3S5X-005-96	3S5X-005-96	3S5X-005-96	1
	(includes Ref. Nos. C1, C2 & C3)											
C2	5/16-18x1.75" Screw	Incl. w/Ref. C1	Incl. w/Ref. C1	Incl. w/Ref. C1	Incl. w/Ref. C1	Incl. w/Ref. C1	Incl. w/Ref. C1	Incl. w/Ref. C1	Incl. w/Ref. C1	Incl. w/Ref. C1	Incl. w/Ref. C1	6
C3	Screw Keeper #109 O-ring	Incl. w/Ref. C1	Incl. w/Ref. C1	Incl. w/Ref. C1	Incl. w/Ref. C1	Incl. w/Ref. C1	Incl. w/Ref. C1	Incl. w/Ref. C1	Incl. w/Ref. C1	Incl. w/Ref. C1	Incl. w/Ref. C1	6
C4	Suction Flange Kit	3S5X-050-95	3S5X-050-95	3S5X-050-95	3S5X-050-95	3S5X-050-95	3S5X-050-95	3S5X-050-95	3S5X-050-95	3S5X-050-95	3S5X-050-95	1
	(includes Ref. Nos. C4 & C5)											
C5	5/16-18x1" Screw	Incl. w/Ref. C4	Incl. w/Ref. C4	Incl. w/Ref. C4	Incl. w/Ref. C4	Incl. w/Ref. C4	Incl. w/Ref. C4	Incl. w/Ref. C4	Incl. w/Ref. C4	Incl. w/Ref. C4	Incl. w/Ref. C4	4
C6	Discharge Manifold Kit	3S5X-080-95	3S5X-080-95	3S5X-080-95	3S5X-080-95	3S5X-080-95	3S5X-080-95	3S5X-080-95	3S5X-080-95	3S5X-080-95	3S5X-080-95	1
	(includes Ref. Nos. C6 & C7)											
C7	5/16-18x1" Screw	Incl. w/Ref. C6	Incl. w/Ref. C6	Incl. w/Ref. C6	Incl. w/Ref. C6	Incl. w/Ref. C6	Incl. w/Ref. C6	Incl. w/Ref. C6	Incl. w/Ref. C6	Incl. w/Ref. C6	Incl. w/Ref. C6	4
KIT	Gasket Kit EPDM	3S9E-300-90	3S9E-300-90	3S9E-300-90	3S9E-300-90	3S9E-300-90	3S9E-300-90	3S9E-300-90	3S9E-300-90	3S9E-300-90	3S9E-300-90	1
	(includes Ref. Nos. D1, D2, D3, D4, D5 & D6)											
D1	Check Valve	Incl. w/Ref. KIT	Incl. w/Ref. KIT	Incl. w/Ref. KIT	Incl. w/Ref. KIT	Incl. w/Ref. KIT	Incl. w/Ref. KIT	Incl. w/Ref. KIT	Incl. w/Ref. KIT	Incl. w/Ref. KIT	Incl. w/Ref. KIT	1
D2	#270 O-ring	Incl. w/Ref. KIT	Incl. w/Ref. KIT	Incl. w/Ref. KIT	Incl. w/Ref. KIT	Incl. w/Ref. KIT	Incl. w/Ref. KIT	Incl. w/Ref. KIT	Incl. w/Ref. KIT	Incl. w/Ref. KIT	Incl. w/Ref. KIT	1
D3	#378 O-ring	Incl. w/Ref. KIT	Incl. w/Ref. KIT	Incl. w/Ref. KIT	Incl. w/Ref. KIT	Incl. w/Ref. KIT	Incl. w/Ref. KIT	Incl. w/Ref. KIT	Incl. w/Ref. KIT	Incl. w/Ref. KIT	Incl. w/Ref. KIT	1
D4	#117 O-ring	Incl. w/Ref. KIT	Incl. w/Ref. KIT	Incl. w/Ref. KIT	Incl. w/Ref. KIT	Incl. w/Ref. KIT	Incl. w/Ref. KIT	Incl. w/Ref. KIT	Incl. w/Ref. KIT	Incl. w/Ref. KIT	Incl. w/Ref. KIT	2
D5	Plug	Incl. w/Ref. KIT	Incl. w/Ref. KIT	Incl. w/Ref. KIT	Incl. w/Ref. KIT	Incl. w/Ref. KIT	Incl. w/Ref. KIT	Incl. w/Ref. KIT	Incl. w/Ref. KIT	Incl. w/Ref. KIT	Incl. w/Ref. KIT	2
D6	Flange Gasket	Incl. w/Ref. KIT	Incl. w/Ref. KIT	Incl. w/Ref. KIT	Incl. w/Ref. KIT	Incl. w/Ref. KIT	Incl. w/Ref. KIT	Incl. w/Ref. KIT	Incl. w/Ref. KIT	Incl. w/Ref. KIT	Incl. w/Ref. KIT	2

Repair Parts List - Continued

Ref No.	Engine Description	Part Number for Models: Vanguard 10 3P9XAR	Honda GX270 3P9XHR	Hatz 1B40 3P9XZR	Yanmar L100 3P9XYR	Pedestal 3P9XP	Vanguard 10 3S9XAR	Honda GX270 3S9XHR	Hatz 1B40 3S9XZR	Yanmar L100 3S9XYR	Pedestal 3S9XP	Qty
E1	Frame	C401-100-00	C401-100-00		C401-100-00	N/A	C401-100-00	C401-100-00	C401-100-00	C401-100-00	N/A	1
HKIT	Frame Hardware Kit	2MP5-100-90	2MP9-100-90	2MP9-102-90	2MP9-102-90	N/A	2MP5-100-90	2MP9-100-90	2MP9-102-90	2MP9-102-90	N/A	1
	(includes Ref. Nos. E2, E3, E4, E5, E6 & E7)											
E2	5/16-18x1.75" Screw	N/A	Incl. w/Ref.HKIT	Incl. w/Ref.HKIT	Incl. w/Ref.HKIT	N/A	N/A	Incl. w/Ref.HKIT	Incl. w/Ref.HKIT	Incl. w/Ref.HKIT	N/A	4
E2	5/16-18x2-3/4" Screw	Incl. w/Ref.HKIT	N/A	N/A	N/A	N/A	Incl. w/Ref.HKIT	N/A	N/A	N/A	N/A	
E3	5/16-18 Hex Nut	Incl. w/Ref.HKIT	Incl. w/Ref.HKIT	Incl. w/Ref.HKIT	Incl. w/Ref.HKIT	N/A	Incl. w/Ref.HKIT	Incl. w/Ref.HKIT	Incl. w/Ref.HKIT	Incl. w/Ref.HKIT	N/A	4
E4	5/16 Flat Washer	Incl. w/Ref.HKIT	Incl. w/Ref.HKIT	Incl. w/Ref.HKIT	Incl. w/Ref.HKIT	N/A	Incl. w/Ref.HKIT	Incl. w/Ref.HKIT	Incl. w/Ref.HKIT	Incl. w/Ref.HKIT	N/A	4
E5	5/16-18x1" Screw	Incl. w/Ref.HKIT	Incl. w/Ref.HKIT	N/A	N/A	N/A	Incl. w/Ref.HKIT	Incl. w/Ref.HKIT	N/A	N/A	N/A	2
E5	5/16-18x1.75" Screw	N/A	N/A	Incl. w/Ref.HKIT	Incl. w/Ref.HKIT	N/A	N/A	N/A	Incl. w/Ref.HKIT	Incl. w/Ref.HKIT	N/A	2
E6	5/16 Hex Nut	Incl. w/Ref.HKIT	Incl. w/Ref.HKIT	Incl. w/Ref.HKIT	Incl. w/Ref.HKIT	N/A	Incl. w/Ref.HKIT	Incl. w/Ref.HKIT	Incl. w/Ref.HKIT	Incl. w/Ref.HKIT	N/A	2
E7	Bracket Raising Block	N/A	N/A	Incl. w/Ref.HKIT	Incl. w/Ref.HKIT	N/A	N/A	N/A	Incl. w/Ref.HKIT	Incl. w/Ref.HKIT	N/A	2
E8	Engine Raising Block (not shown)	Incl. w/Ref.HKIT	N/A	N/A	N/A	N/A	Incl. w/Ref.HKIT	N/A	N/A	N/A	N/A	2
F1	Rubber Foot Kit	C400-100-91	C400-100-91	C400-100-91	C400-100-91	N/A	C400-100-91	C400-100-91	C400-100-91	C400-100-91	N/A	1
	(includes Ref. Nos. F1, F2, & F3)											
F2	5/16-18x1.5" Screw	Incl. w/Ref. F1	Incl. w/Ref. F1	Incl. w/Ref. F1	Incl. w/Ref. F1	N/A	Incl. w/Ref. F1	Incl. w/Ref. F1	Incl. w/Ref. F1	Incl. w/Ref. F1	N/A	4
F3	5/16-18 Hex Nut	Incl. w/Ref. F1	Incl. w/Ref. F1	Incl. w/Ref. F1	Incl. w/Ref. F1	N/A	Incl. w/Ref. F1	Incl. w/Ref. F1	Incl. w/Ref. F1	Incl. w/Ref. F1	N/A	4
G1	Battery Tray Kit	N/A	N/A	C401-101-90	C401-101-90	N/A	N/A	N/A	C401-101-90	C401-101-90	N/A	1
	(includes Ref. Nos. G1, G2, G3, G4, G5, G6 & G7)											
G2	Battery Hold Down	N/A	N/A	Incl. w/Ref. G1	Incl. w/Ref. G1	N/A	N/A	N/A	Incl. w/Ref. G1	Incl. w/Ref. G1	N/A	1
G3	Hook Bolt	N/A	N/A	Incl. w/Ref. G1	Incl. w/Ref. G1	N/A	N/A	N/A	Incl. w/Ref. G1	Incl. w/Ref. G1	N/A	2
G4	Flat Washer	N/A	N/A	Incl. w/Ref. G1	Incl. w/Ref. G1	N/A	N/A	N/A	Incl. w/Ref. G1	Incl. w/Ref. G1	N/A	2
G5	Wing Nut	N/A	N/A	Incl. w/Ref. G1	Incl. w/Ref. G1	N/A	N/A	N/A	Incl. w/Ref. G1	Incl. w/Ref. G1	N/A	2
G6	5/16-18x1/2" Screw	N/A	N/A	Incl. w/Ref. G1	Incl. w/Ref. G1	N/A	N/A	N/A	Incl. w/Ref. G1	Incl. w/Ref. G1	N/A	2
G7	5/16-18 Hex Nut	N/A	N/A	Incl. w/Ref. G1	Incl. w/Ref. G1	N/A	N/A	N/A	Incl. w/Ref. G1	Incl. w/Ref. G1	N/A	2
H1	Strainer (not shown)	1680-000-00	1680-000-00	1680-000-00	1680-000-00	1680-000-00	1681-000-00	1681-000-00	1681-000-00	1681-000-00	1680-000-00	1
P1	Pedestal/Adapter Kit (not shown)	N/A	N/A	N/A	N/A	2870-090-99	N/A	N/A	N/A	N/A	2870-090-99	1

AMT Pump Company
(herein "AMT")
400 Spring Street
Royersford, PA 19468
Phone: (610) 948-3800
Fax: (610) 948-5300
www.amtpump.com

General Information

SALES POLICY: AMT products are sold through our established Distributors. We do not sell direct to the consumer or organization not entitled to trade recognition. Therefore, possession of our catalogs and/or price list(s) does not infer an offer to sell.

MINIMUM ORDER: We appreciate your order, however, all orders are subject to a minimum $35.00 net invoice charge (excluding freight). This applies to all pump and parts purchase orders.

PRICES: Prices are subject to change without notice. All orders accepted are subject to prices in effect at time of shipment.

PAYMENT TERMS: Terms, upon establishment of credit, are Net 30 days. Past due accounts may be subject to a service charge of 1.5% per month. Domestic or assignable letter of credit is required for all export trade.

PAST DUE ACCOUNTS: AMT reserves the right to withhold open account shipments on any past due account. Invoices are considered past due after thirty (30) days. In the interest of sound business, all orders are subject to approval of the Credit Department.

SHIPPING INSTRUCTIONS: All shipments will be made F.O.B. the factory. Where instructions for shipment do not appear on the order, the shipment will be made according to our best judgment. Full risk of loss (including transportation delays and losses) shall pass to the customer upon delivery of the products to the carrier at the F.O.B. point. When loss or delay occurs, primary responsibility for tracing rests with the customer. When there is LOSS or APPARENT VISIBLE DAMAGE to a shipment, when tendered for delivery, *DO NOT* give the carrier a clear receipt. Note such damage on the carrier's delivery receipt and *HAVE THE DRIVER SIGN THE RECEIPT.*

PRODUCT REVISIONS: AMT reserves the right to discontinue, change or improve its products or any portions thereof without being obligated to provide such a change or improvement for units sold and/or shipped prior to such a change or improvement.

LEAD TIME: Products designated "Quick Ship Product", also referred to as "QSP" will normally be shipped within 24 hours of receipt of a non-cancellable purchase order. Only limited quantities of "QSP" pumps are available.

STANDARD LEAD TIME: Lead time is two weeks for all non "QSP" product. AMT reserves the right to revise lead times as required due to availability of materials and all other causes beyond our control.

VIP SHIPMENT: Select AMT and IPT branded pumps are available for next day shipment for non-QSP (Quick Ship Products) items and subjected to a specific model surcharge per unit noted in the respective price book. Requires calling for availability, confirmation and a non-cancellable purchase order or credit card payment prior to shipment. The expedited shipping charges are an additional cost added separately from the VIP charges per item. AMT reserves the right to revise lead times as required due to availability of materials and all other causes beyond our control. QSP quantities are limited as determined by AMT.

ALL purchase orders must be submitted via hard copy sent to AMT customer service department by fax, EDI or e-mail.

RETURN GOODS POLICY: Goods shall not be returned without a return goods authorization number (RGA) issued by AMT customer service. The RGA number must be listed on the packing list. Only current model and part numbers with a valid date code may be returned (within one year from date of purchase). **A 20% restocking and packaging charge will apply to all returns. All shipping charges must be pre-paid. No exceptions.**

ORDER CHANGES BY CUSTOMER: Orders in process may not be changed except with written consent and may be subject to special charges.

12 Month Limited Warranty

EXTENT AND DURATION OF LIMITED WARRANTY

Coverage: AMT Pump Company (herein "AMT") or IPT Pumps by Gorman-Rupp (herein "IPT") or Gorman-Rupp Industries Division of the The Gorman-Rupp Company, Patterson, or the Gorman-Rupp Company (herein referred to as "G-R Unit) each individually warrants that its products and parts shall be free from defects in material and workmanship for twelve (12) months from the date of purchase by the original end user when installation is made and maintenance is performed in accordance with G-R Unit's recommendations. Wear and tear resulting from use and items normally consumed in use are not covered.

EXCEPTIONS

(A) This Limited Warranty shall not apply to mechanical seals in AMT or IPT pumps and the following products and parts: engines, motors, trade accessories and all other products, components, parts and materials not manufactured by the G-R Units. These items may, however, be covered by the warranties of their respective manufacturers. (B) This warranty does not extend to or apply to any unit which has been repaired or altered at any place other than by a G-R Unit, or by persons not expressly approved by a G-R Unit to make repairs or alterations, nor to any unit the serial number, model number or identification of which has been removed, defaced or altered. (C) This warranty does not extend to any product manufactured by a G-R Unit, which has been subjected to mis-use, neglect, accident, improper installation, or use in violation of instructions furnished by a G-R Unit. (D) Pump Kits: This warranty does not extend to any product sold by a G-R Unit unassembled as a Pump Kit. Pump Kits are warranted against defects in material and workmanship for 60 days from the date of shipment from a G-R Unit. Any Pump Kit parts deemed defective by a G-R Unit will be replaced free of charge within 60 days of shipment. Pump Kits are not returnable for credit.

LIMITATIONS

THE G-R UNITS' SOLE AND EXCLUSIVE WARRANTY WITH RESPECT TO THEIR PRODUCTS AND PARTS IS THIS LIMITED WARRANTY. THIS LIMITED WARRANTY IS IN LIEU OF ALL OTHER EXPRESS AND/OR IMPLIED WARRANTIES, INCLUDING IMPLIED WARRANTIES OF MERCHANTABILITY AND FITNESS FOR PARTICULAR PURPOSE.

EXCLUSIVE REMEDY AND DAMAGES

The sole and exclusive remedy for breach of this Warranty by a G-R Unit and the entire extent of its liability for such breach or for damages arising from the use of the products and parts covered under this Limited Warranty, shall be as follows:

1. **Repair or Replacement:** If inspection shows that any G-R Unit product or part covered under this Limited Warranty is defective in materials or workmanship, the G-R Unit shall repair or replace the defective or non-conforming product or part without charge, whichever the G-R Unit chooses. You must have properly maintained and used the product or part claimed to be defective in accordance with the maintenance schedule or manual, which comes with the product. No allowance will be made for labor, installation, removal, transportation or other charges incurred by you in connection with such repair or replacement.
2. To obtain the above remedy:
   - A. Immediately notify the G-R Unit upon discovery of the claimed defect in materials or workmanship and provide the serial number or date code of the product and/or part(s) or provide the G-R Unit with the invoice or bill of sale referencing the product by no later than the expiration date of the warranty period.
   - B. The G-R Unit will advise whether inspection will be necessary and how whether repair or replacement will be made. If inspection by the G-R Unit is necessary, the pump or defective part must be sent freight pre-paid to the G-R Unit. Return shipment will be F.O.B. the G-R Unit's plant.
   - C. **Return Goods Authorization Requirement:** No product will be accepted for return or replacement without the prior written authorization of the G-R Unit. Upon such authorization, and in accordance with instructions from the G-R Unit, the product will be returned to the G-R Unit, shipping charges prepaid by the Buyer.

3. **Damages:** The G-R Unit's liability for damages for breach of this Limited Warranty shall not exceed the amount of the purchase price of the product or part(s) in respect to which Such damages are claimed. **IN NO EVENT SHALL THE G-R UNITS BE LIABLE FOR INCIDENTAL, CONSEQUENTIAL OR SPECIAL DAMAGES FOR BREACH OF THIS LIMITED WARRANTY.**

Some states do not allow the exclusion or limitation of incidental or consequential damages, so the above limitation or exclusion may not apply to you. This Limited Warranty gives you specific legal rights, and you may also have other rights, which vary from state to state.