MAGNUM™
A Generac Company

DIESEL GENERATOR

MMG45IF4

With ***Power Zone***™ Controller

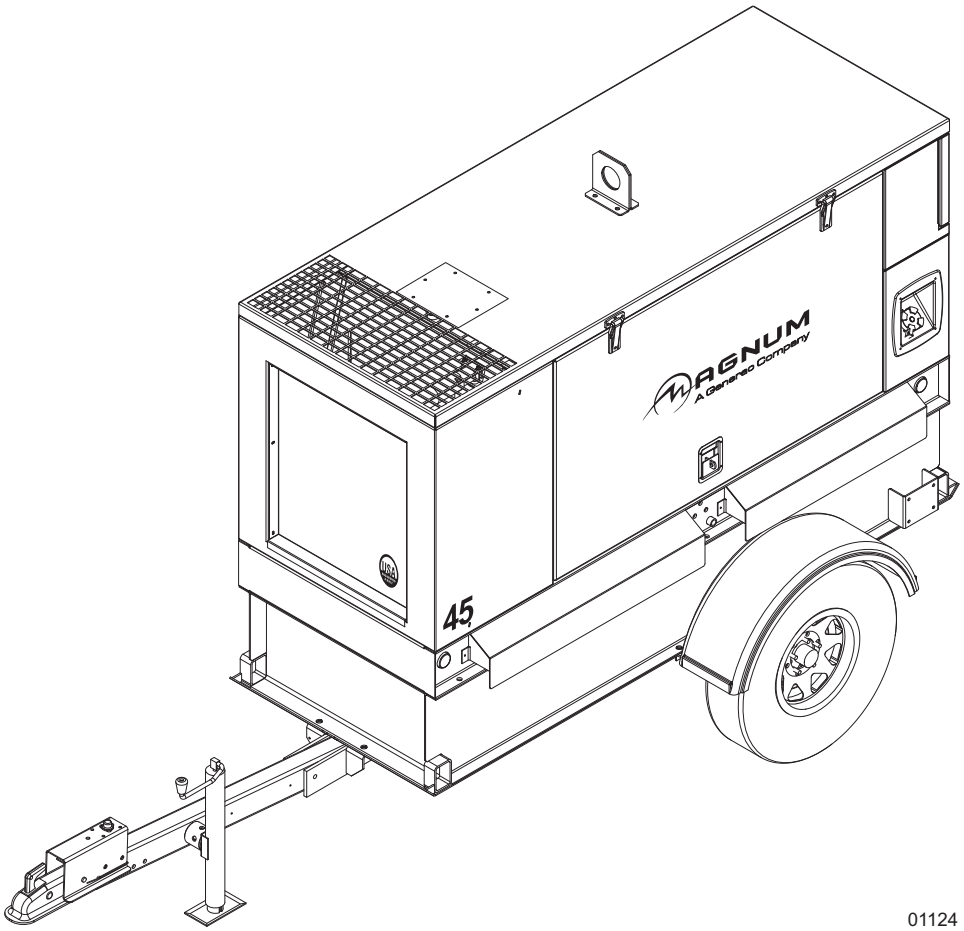

01124

PARTS MANUAL

36590 ORG 01/15

Introduction

This parts manual was prepared based on the information available at the time of publication and is subject to change without notice. Magnum Power Products LLC reserves the right to change parts at any time. To check whether a revised parts manual is available, contact Magnum Power Products LLC.

DO NOT MODIFY or use this equipment for any application other than which it was designed for. To keep your equipment fully operational, it is suggested you maintain a stock of commonly used maintenance or service parts. A recommended spare parts list can be found in the back of this manual. To order service parts, please go to the Magnum website or call Magnum Power Products LLC.

Please be prepared to provide the following information when ordering replacement parts: model number, serial number (on unit serial tag), part number, purchase order number (if applicable), shipping address, shipping method.

MAGNUM POWER PRODUCTS LLC
215 Power Drive • Berlin, WI 54923 U.S.A.
Phone: 920-361-4442
FAX: 920-361-4416
Toll Free: 1-800-926-9768
www.magnumpower.com

For technical or parts QUESTIONS, please contact the Magnum Power Products LLC Customer Support or Technical Support team at 1-800-926-9768.

Engine Make:_____
Engine Serial Number:_____
Engine Model Number: _____
Generator Make: _____
Generator Model Number:_____
Generator Serial Number: _____
Unit Model Number:_____
Unit Serial Number: _____

⚠ WARNING

CALIFORNIA PROPOSITION 65 WARNING: Diesel engine exhaust and some of its constituents are known to the state of California to cause cancer, birth defects and other reproductive harm.

Introduction ii
Parts Manual Instructions 1
Enclosure Panels 2
Unit Decals - Exterior 4
Unit Decals - Left Side Interior 5
Unit Decals - Right Side Interior 6
Unit Decals - Electrical Boxes 7
Doors, Roof, And Front Enclosure To Unit 8
Left Side Door Assembly 10
Right Side Door Assembly 12
Electrical Boxes To Unit 14
Front Enclosure Assembly 16
AC Box Assembly 18
Lug Box Assembly 20
Bottom Rear Box Assembly 22
Receptacle Panel Assembly 24
Control Box Assembly 26
Control Panel Assembly 28
Control Door Assembly 30
Lift Structure To Skid Assembly 32
Exhaust System Assembly 34
Cooling System Assembly 36
Cooling System Hoses 38
Engine And Generator To Skid Assembly 40
Engine Assembly - Left Side 42
Engine Assembly - Right Side 44
Hotstart Assembly Option 46
Engine Mount Assembly 48
Generator Assembly 50
Skid Assembly 52
Fuel Tank Assembly 54
Trailer Assembly - Single Axle 56
Trailer Assembly - Tandem Axle 58
Axle Assembly 60
Trailer Brake Lines - Single Axle 62
Trailer Brake Lines - Tandem Axle 64
Trailer Hitch Options 66
Recommended Spare Parts List 68

Parts Manual Instructions

Product illustrations are only representations. Products supplied may vary from the illustrations in this parts manual. Parts not shown are indicated by a double dash (--) in the item column.

Refer to the illustration to locate the unit ID tag and Vehicle Identification Number (VIN) tag on the unit. Important information, such as the unit serial number, model number, VIN and tire loading information are found on these tags. Record the information from these tags so it is available if the tags are lost or damaged. When ordering parts or requesting assistance, you may be asked to provide this information.

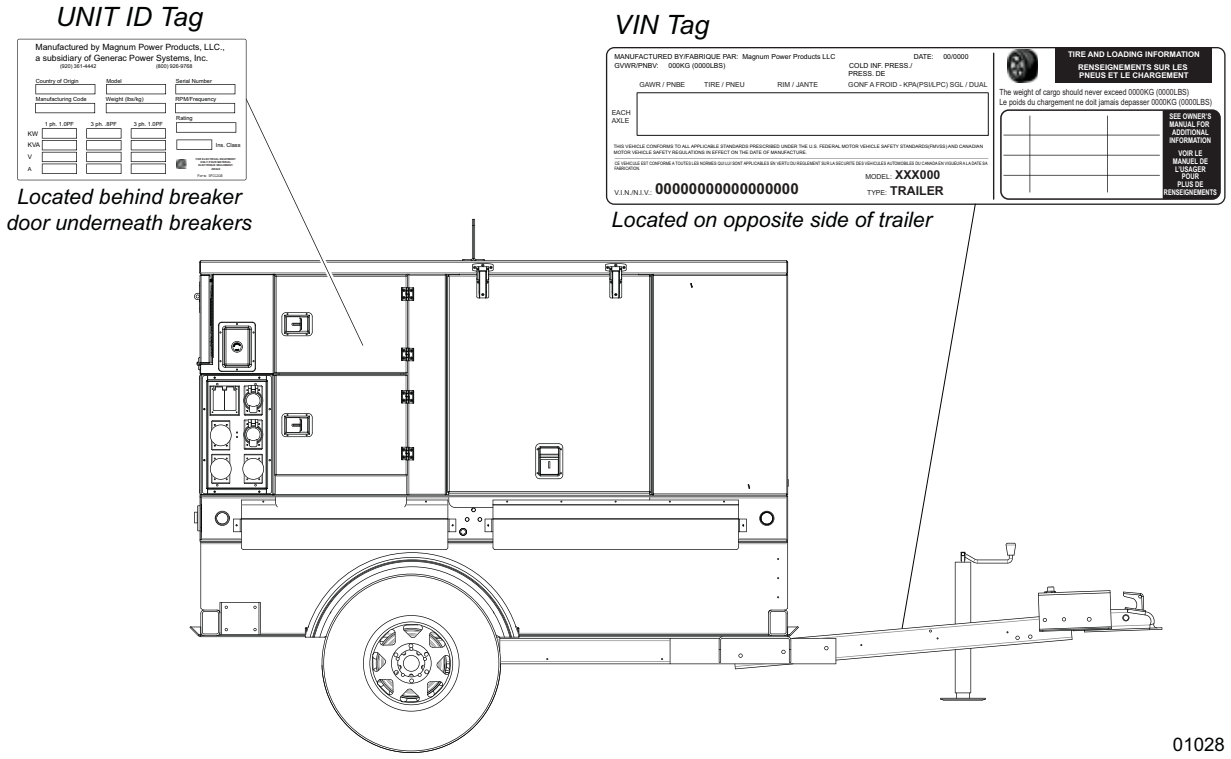

ENCLOSURE PANELS

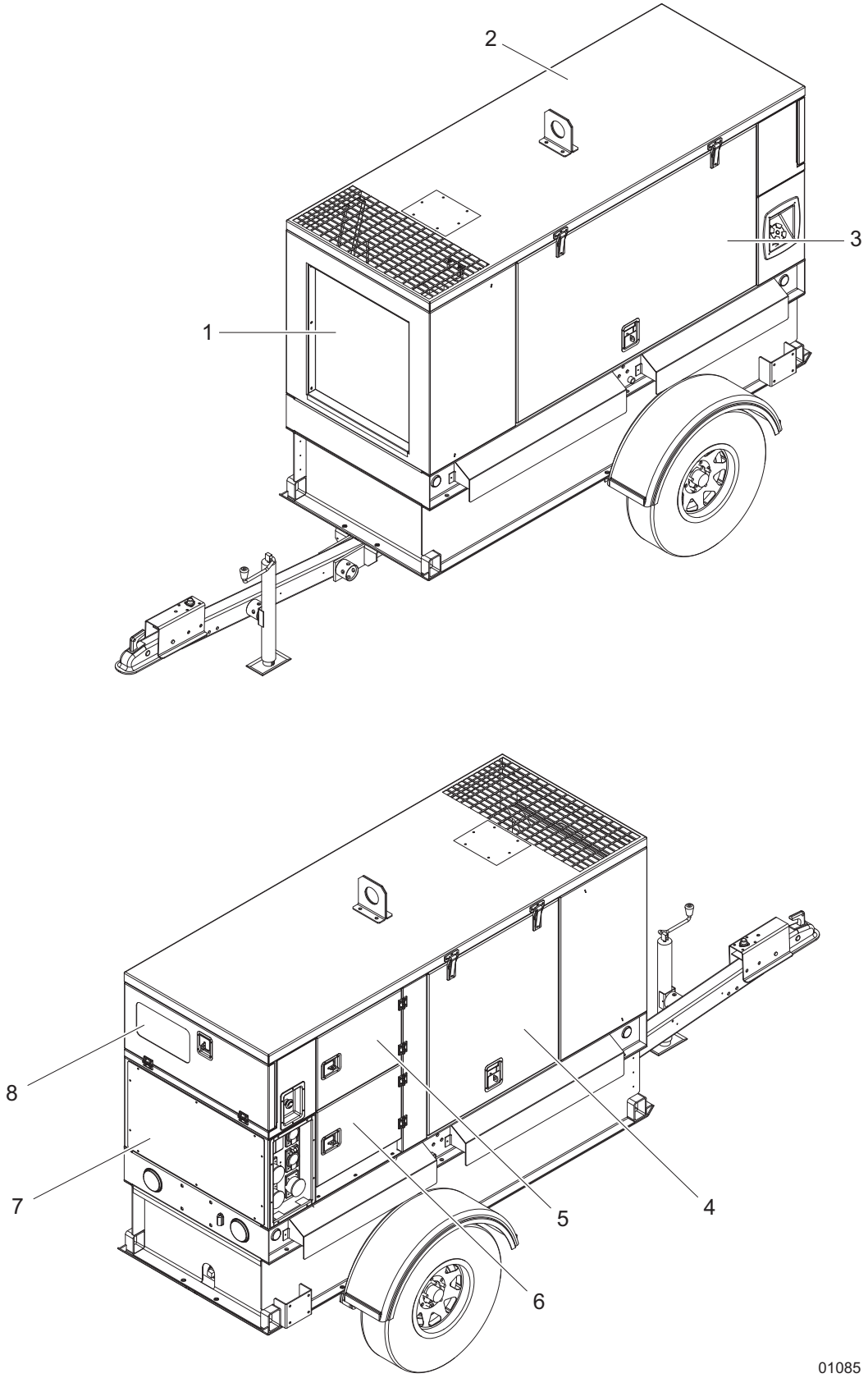

ENCLOSURE PANELS

Item	Part No.	Qty	Description	Notes
1	*Page 16*	1	Front Enclosure Assembly	
2	*Page 8*	1	Roof Assembly	
3	*Page 10*	1	Left Side Door Assembly	
4	*Page 12*	1	Right Side Door Assembly	
5	*Page 18*	1	Breaker Door Assembly	
6	*Page 18*	1	Lug/Cam Door Assembly	
7	*Page 20*	1	AC Box Assembly	
8	*Page 26*	1	Control Door Assembly	

UNIT DECALS - EXTERIOR

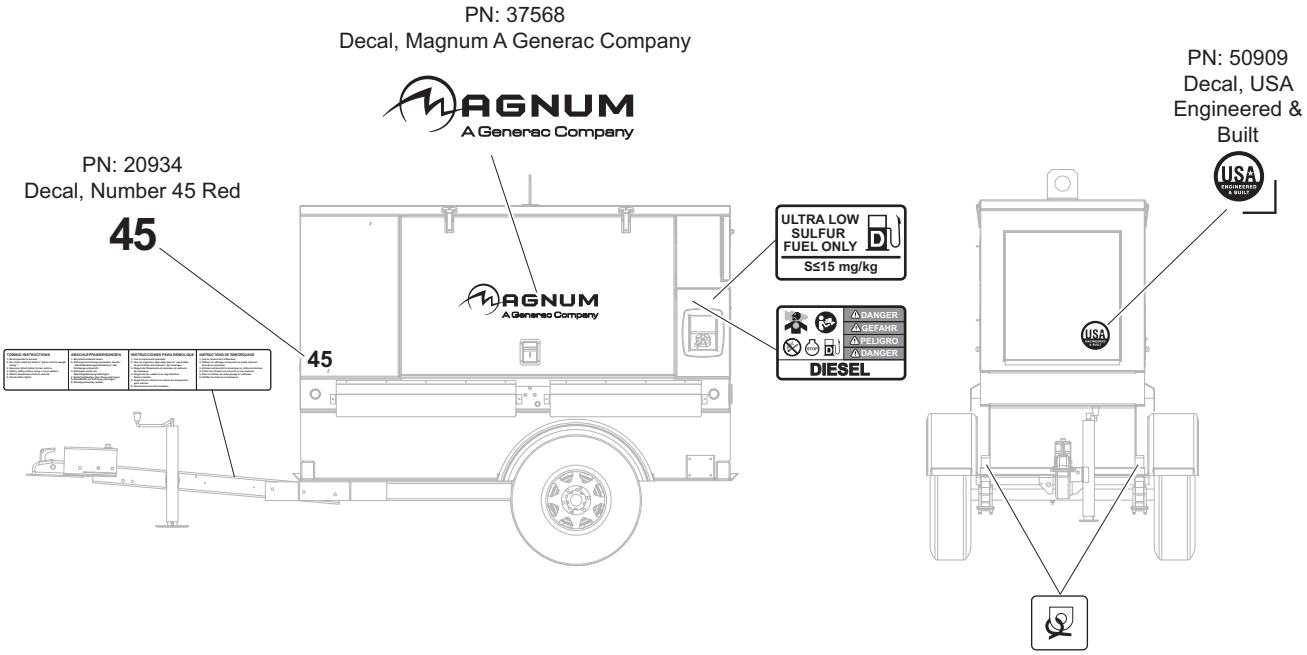

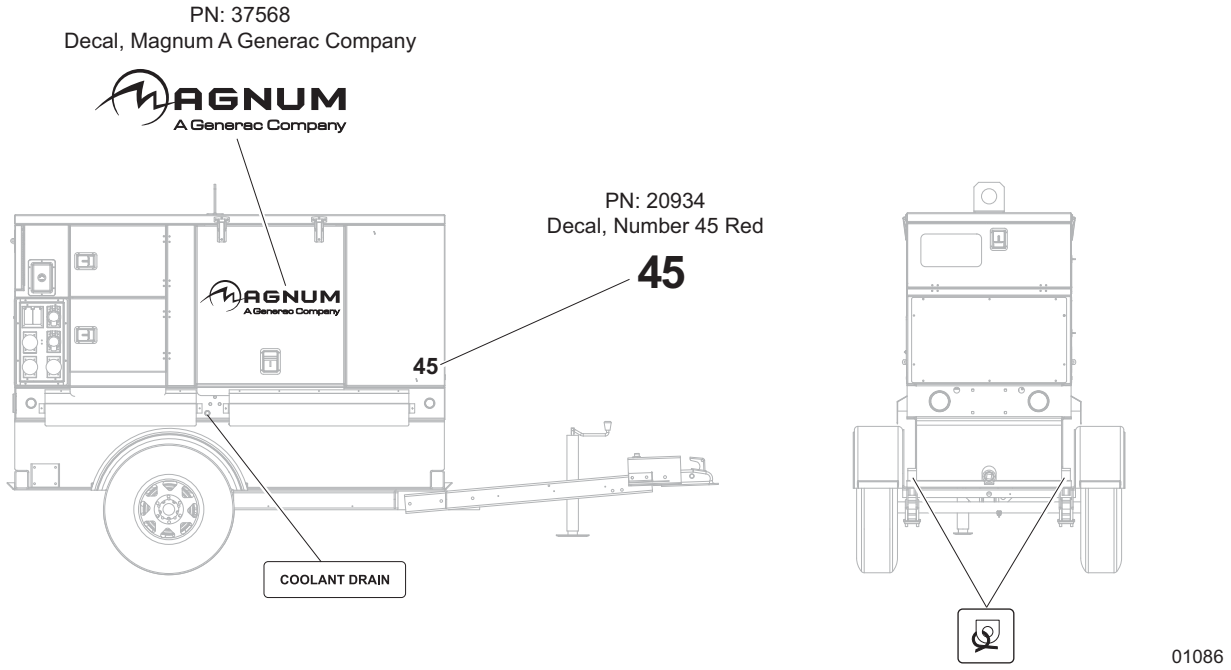

Note: *All safety and operating decals are located on decal sheet 37695, unless otherwise noted.*

UNIT DECALS - LEFT SIDE INTERIOR

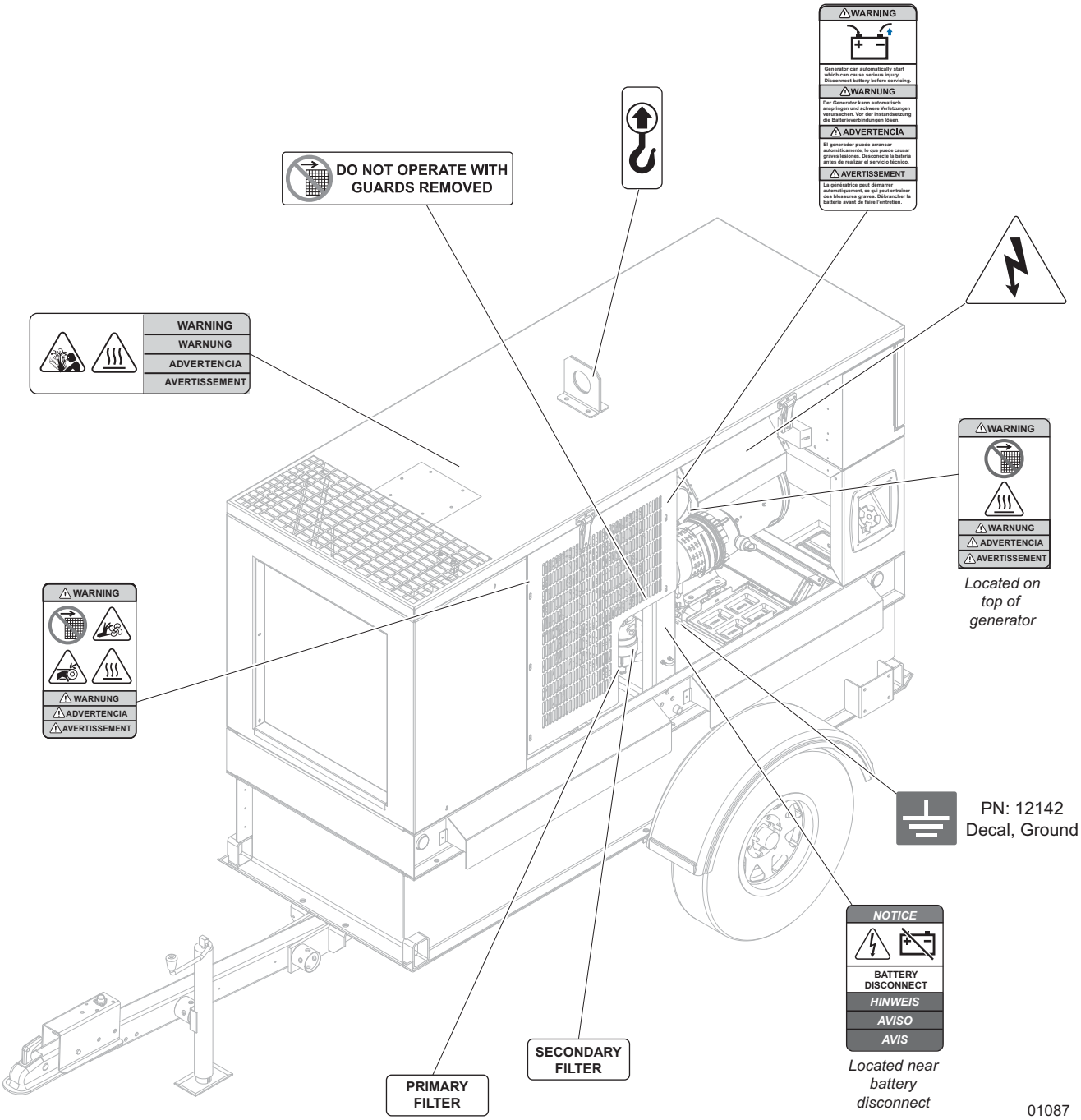

Note: *All safety and operating decals are located on decal sheet 37695, unless otherwise noted.*

UNIT DECALS - RIGHT SIDE INTERIOR

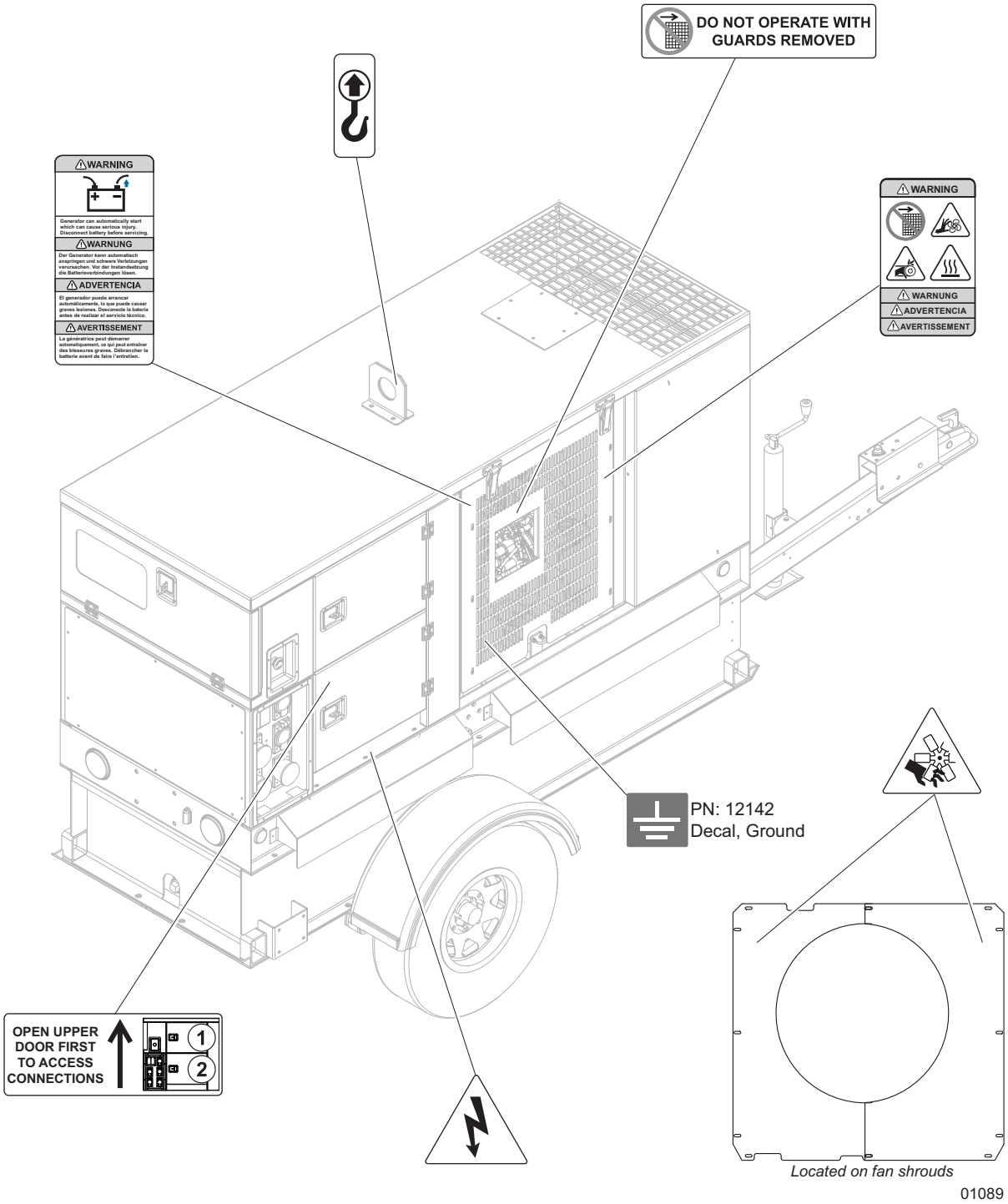

Note: *All safety and operating decals are located on decal sheet 37695, unless otherwise noted.*

UNIT DECALS - ELECTRICAL BOXES

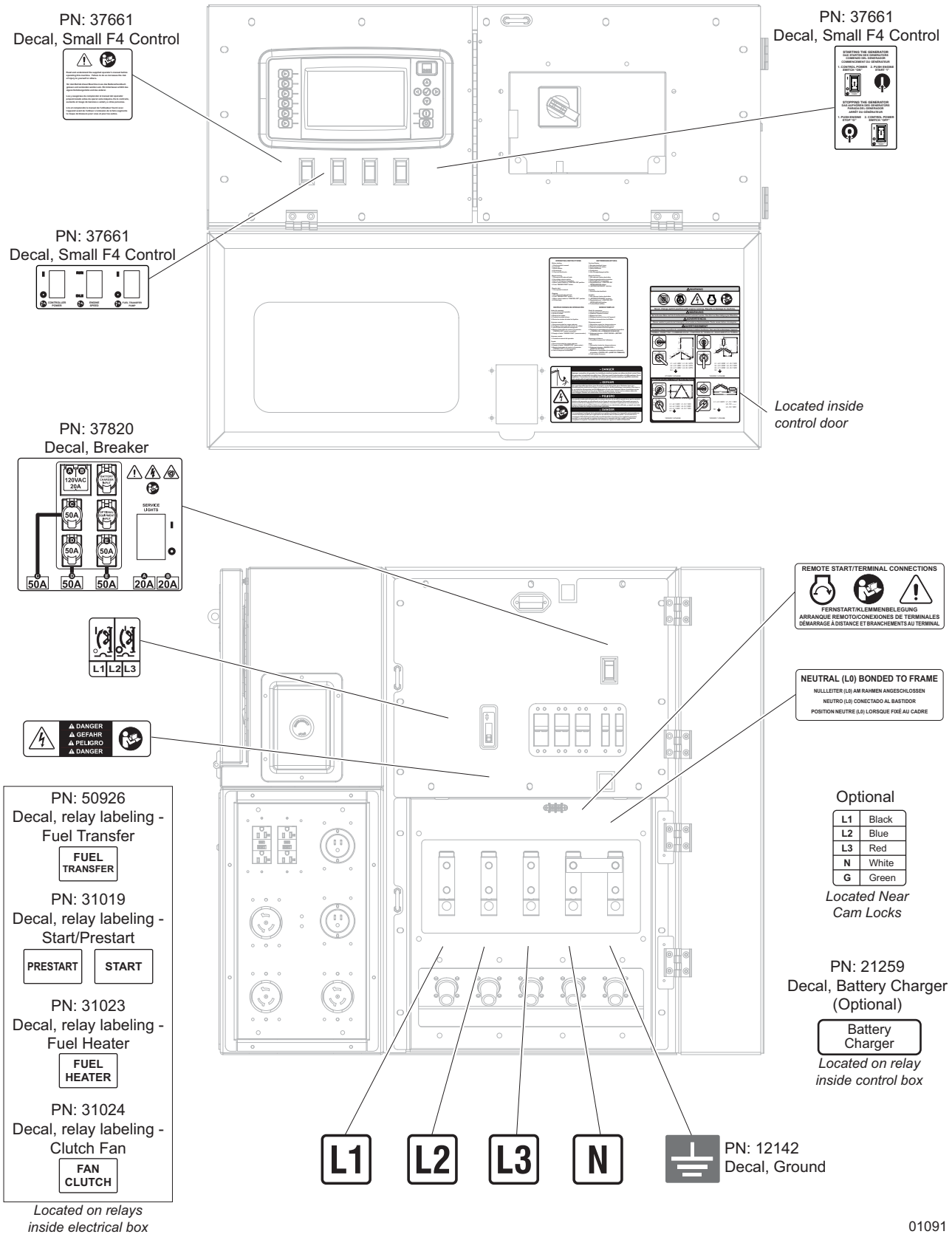

Note: *All safety and operating decals are located on decal sheet 37695, unless otherwise noted.*

DOORS, ROOF, AND FRONT ENCLOSURE TO UNIT

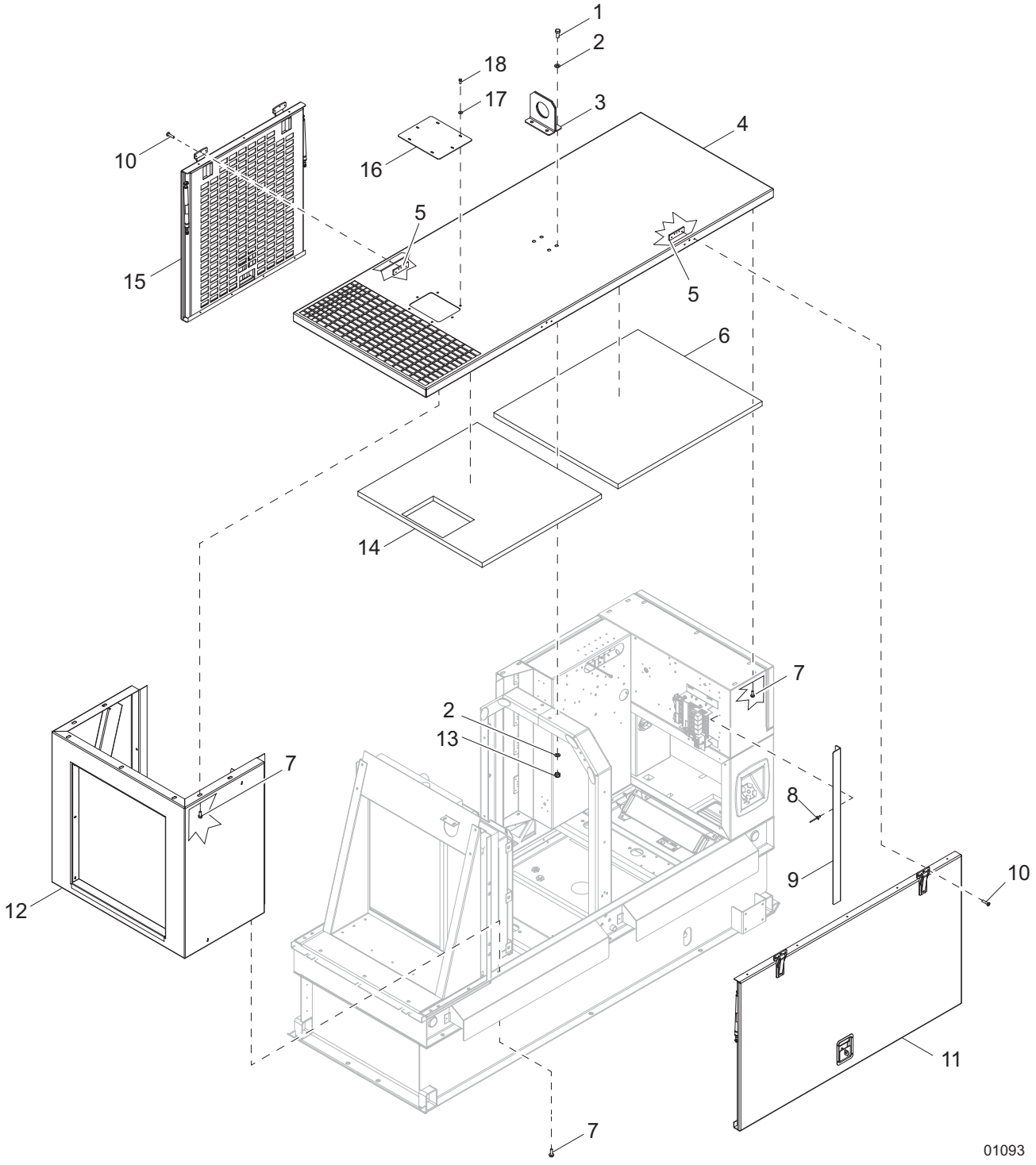

DOORS, ROOF, AND FRONT ENCLOSURE TO UNIT

Item	Part No.	Qty	Description	Notes
1	60388	4	Screw, .500-13 x 1.50 std hex, G5	
2	60309	8	Washer, .500 flat 1.060/.090	
3	37115B	1	Weldment, lifting eye	
4	35728R	1	Panel, roof	
5	37136ZC	4	Plate, hinge back - threaded	
6	37818	1	Foam, roof - rear	
7	60616	25	Screw, .312-18 x .750 sflg hex, G5	
8	60268	6	Rivet, .188 dia. x .126 to .250 grip, SS	
9	37544W	1	Flange, door	
10	35290	12	Screw, 10-24 x 1.0 flat phil, SS	
11	*Page 10*	1	Assembly, left side door	
12	*Page 16*	1	Assembly, front enclosure	
13	62221	4	Nut, .500-13 nylock, G5	
14	37816	1	Foam, roof - front	
15	*Page 12*	1	Assembly, right side door	
16	37214R	1	Panel, radiator access thru roof	
17	60452	6	Washer, .313 flat 1.125/1.0 bonded rubber, SS	
18	60684	6	Screw, .250-20 x .875 std hex, SS	
--	50197	16 ft	Weatherstripping - .06 x 1.0	Used on item 4
--	50187	8.5 ft	Seal, door - D-shaped (.750)	Used for item15
--	50187	10.83 ft	Seal, door - D-shaped (.750)	Used for item 11

LEFT SIDE DOOR ASSEMBLY

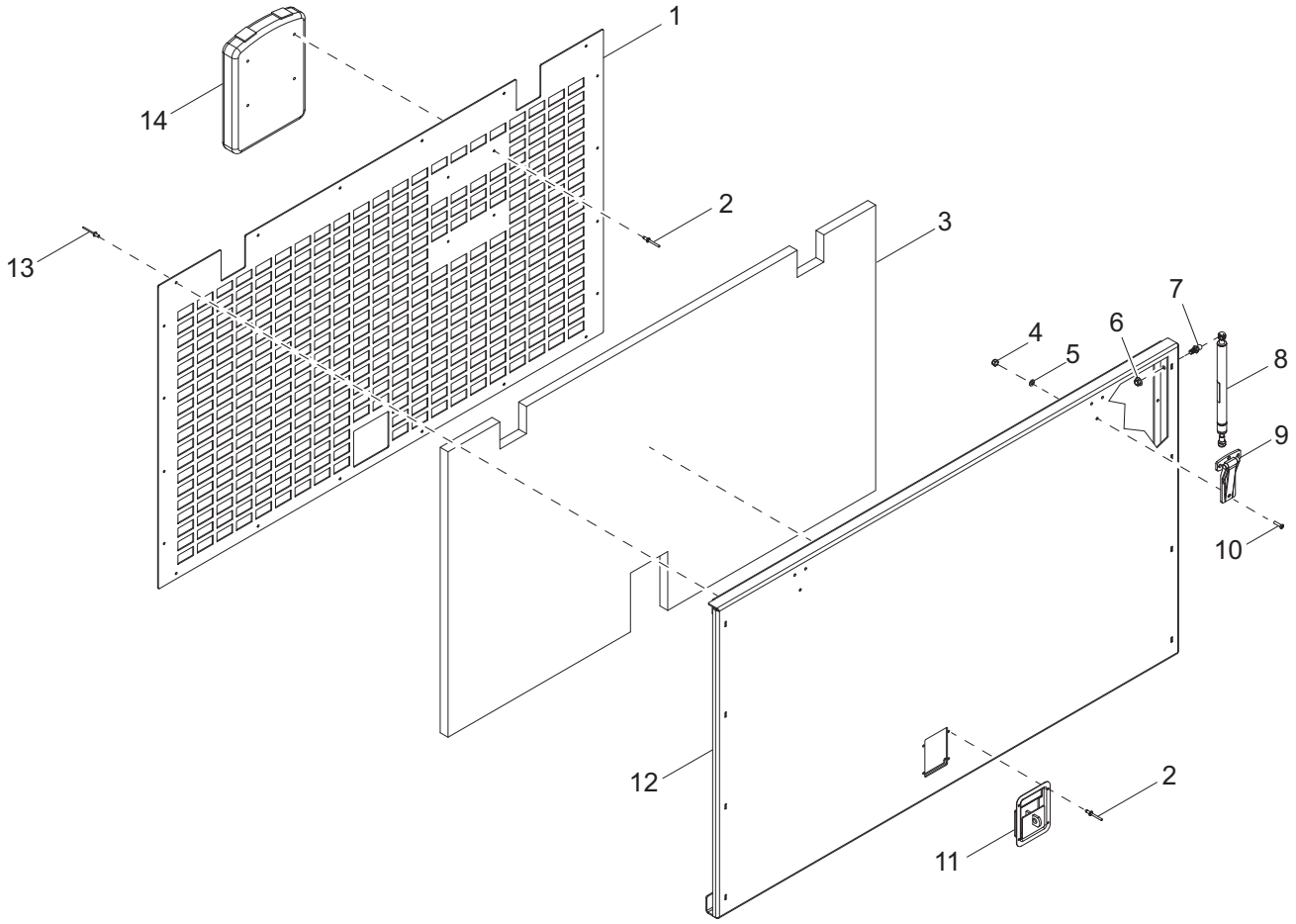

01094

LEFT SIDE DOOR ASSEMBLY

Item	Part No.	Qty	Description	Notes
1	37847W	1	Panel, inner	
2	60268	8	Rivet, .188 dia. x .126 to .250 grip, SS	
3	37050	1	Foam, door	
4	60457	6	Nut, 10-24 nylock, G2	
5	60237	6	Washer, #10 flat .495/.036	
6	60095	4	Nut, .312-18 sflg	
7	35293	4	Stud, ball - 10 mm, .312-18	
8	37821	2	Shock, gas - 150 lb, 7 in. stroke	
9	35136	2	Hinge, flush mount	
10	35290	6	Screw, 10-24 x 1.0 flat head phil, SS	
11	37145B	1	Latch, paddle - mini, black	
12	37845W	1	Weldment, large door	
13	60423	20	Rivet, .188 dia. x .250 to .375 grip	
14	24540	1	Holder, manual (plastic)	
--	50187	5 ft	Seal, door - D-shaped (.750)	
--	37844	1	Assembly, left side door	

RIGHT SIDE DOOR ASSEMBLY

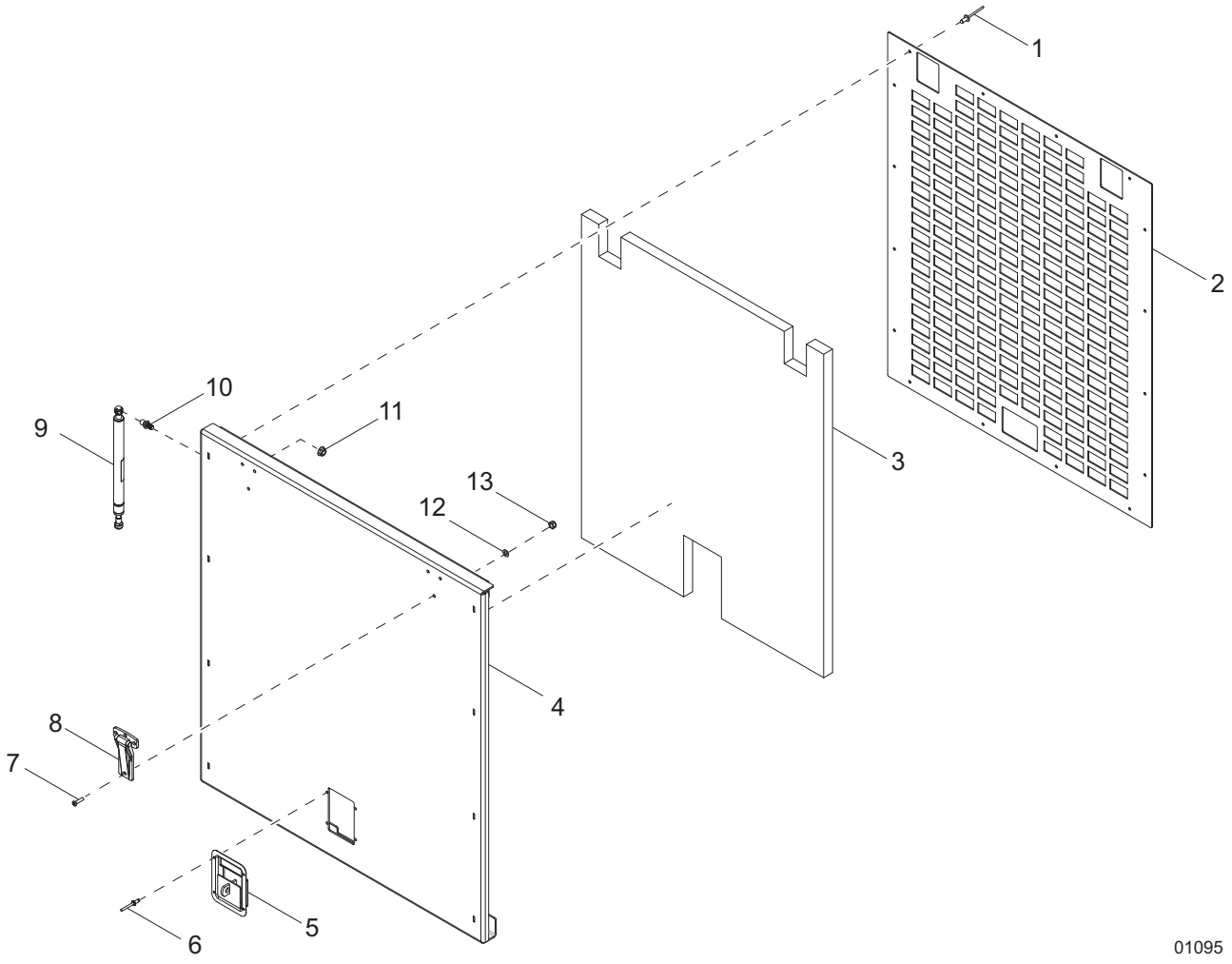

RIGHT SIDE DOOR ASSEMBLY

Item	Part No.	Qty	Description	Notes
1	60423	16	Rivet, .188 dia. x .250 to .375 grip	
2	37854W	1	Panel, inner	
3	37046	1	Foam, door	
4	37852W	1	Weldment, small door	
5	37145B	1	Latch, paddle - mini, black	
6	60268	4	Rivet, .188 dia. x .126 to .250 grip, SS	
7	35290	6	Screw, 10-24 x 1.0 flat head phil, SS	
8	35136	2	Hinge, flush mount	
9	37533	2	Shock, gas - 80 lbs, 6.75 in. stroke	
10	35293	4	Stud, ball - 10 mm, .313-18	
11	60095	2	Nut, .312-18 sflg	
12	60237	6	Washer, #10 flat .495/.036	
13	60457	6	Nut, 10-24 nylock, G2	
--	50187	2.75 ft	Seal, door - D-shaped (.750)	
--	37851	1	Assembly, right side door	

ELECTRICAL BOXES TO UNIT

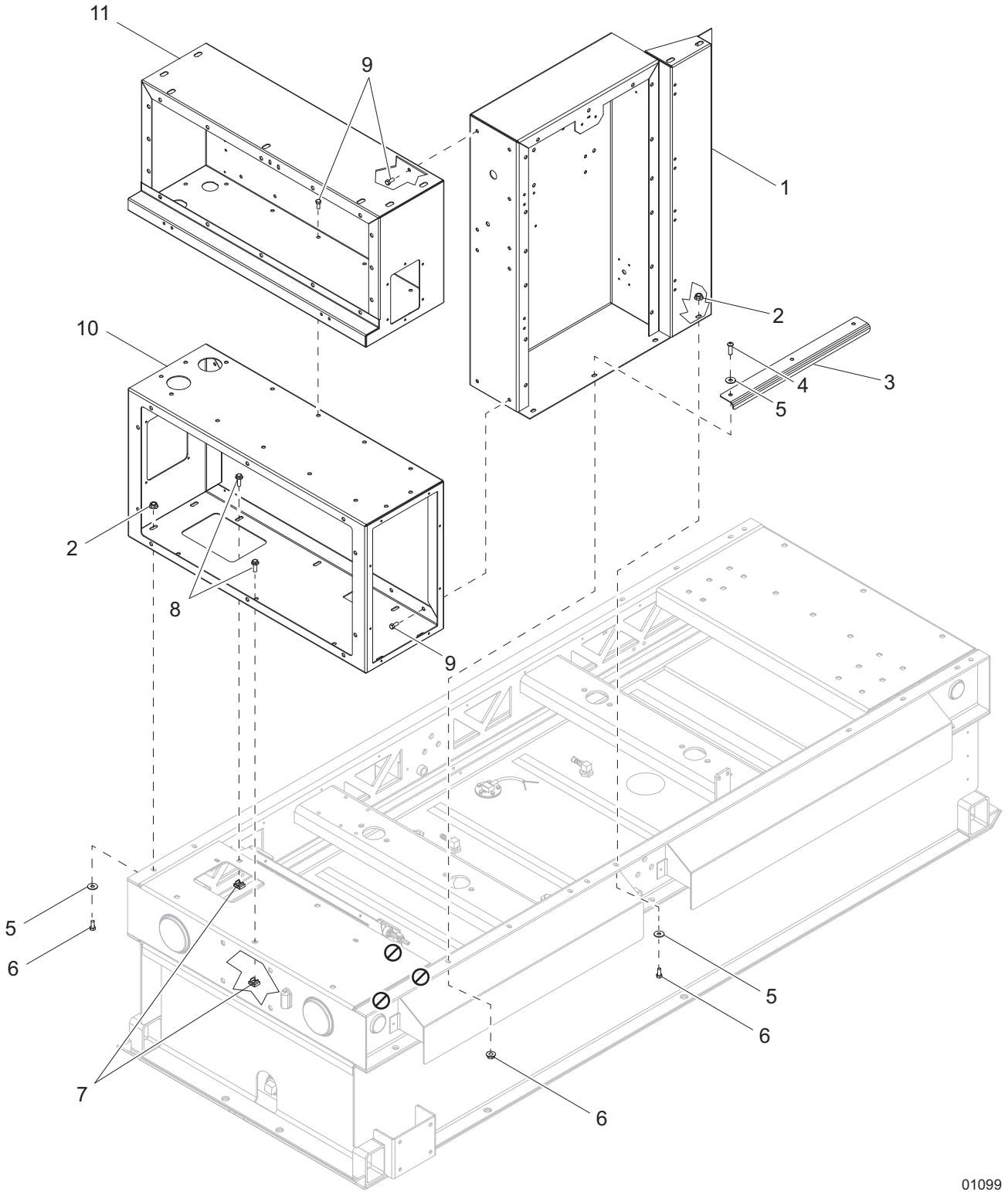

ELECTRICAL BOXES TO UNIT

Item	Part No.	Qty	Description	Notes
1	*Page 18*	1	Assembly, AC box	
2	60095	7	Nut, .312-18 sflg	
3	37817B	1	Guide, cable	
4	60654	3	Screw, .312-18 x 1.0 button hex, SS	
5	60340	7	Washer, .312 flat .875/.040, SS	
6	60507	4	Screw, .312-18 x 1.0 std hex, SS	
7	15425	5	Nut, .312-18 cage	
8	60616	5	Screw, .312-18 x .750 sflg hex, G5	
9	62052	23	Screw, .312-18 x .500 sflg hex, G5	
10	*Page 22*	1	Assembly, bottom rear box	
11	*Page 26*	1	Assembly, control box	

FRONT ENCLOSURE ASSEMBLY

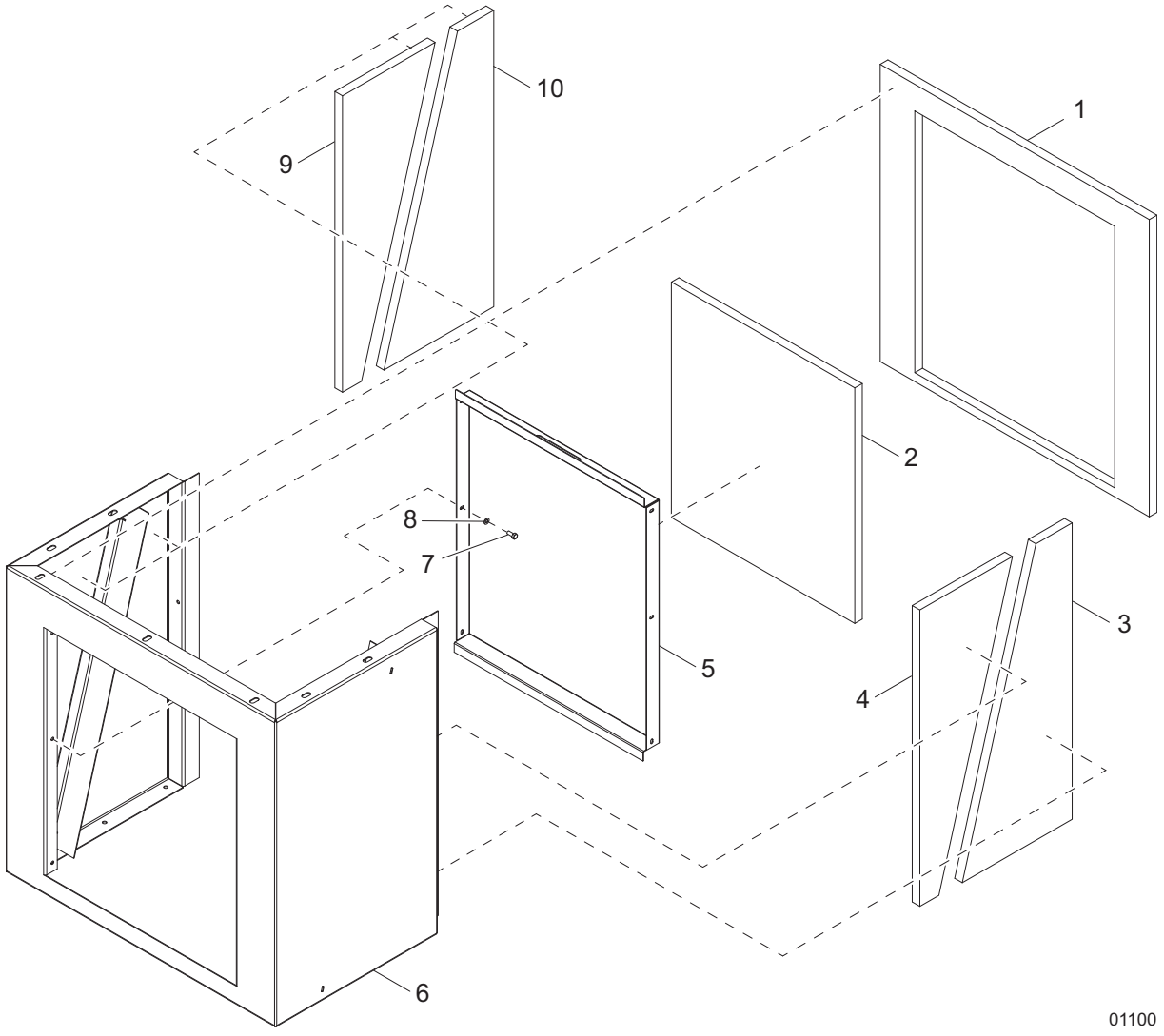

FRONT ENCLOSURE ASSEMBLY

Item	Part No.	Qty	Description	Notes
1	37111	1	Foam, front enclosure	
2	37112	1	Foam, front enclosure - insert	
3	37110	1	Foam, front enclosure - left bottom	
4	37108	1	Foam, front enclosure - left top	
5	37064W	1	Panel, front insert	
6	36932W	1	Weldment, front enclosure	
7	60620	6	Screw, .250-20 x 1.0 std hex, SS	
8	60696	6	Washer, .250 flat .625/.050, SS	
9	37106	1	Foam, front enclosure - right top	
10	37109	1	Foam, front enclosure - right bottom	
--	50197	6 ft	Weatherstripping - .06 x 1.0	Used on item 5
--	36931	1	Assembly, front enclosure	

AC BOX ASSEMBLY

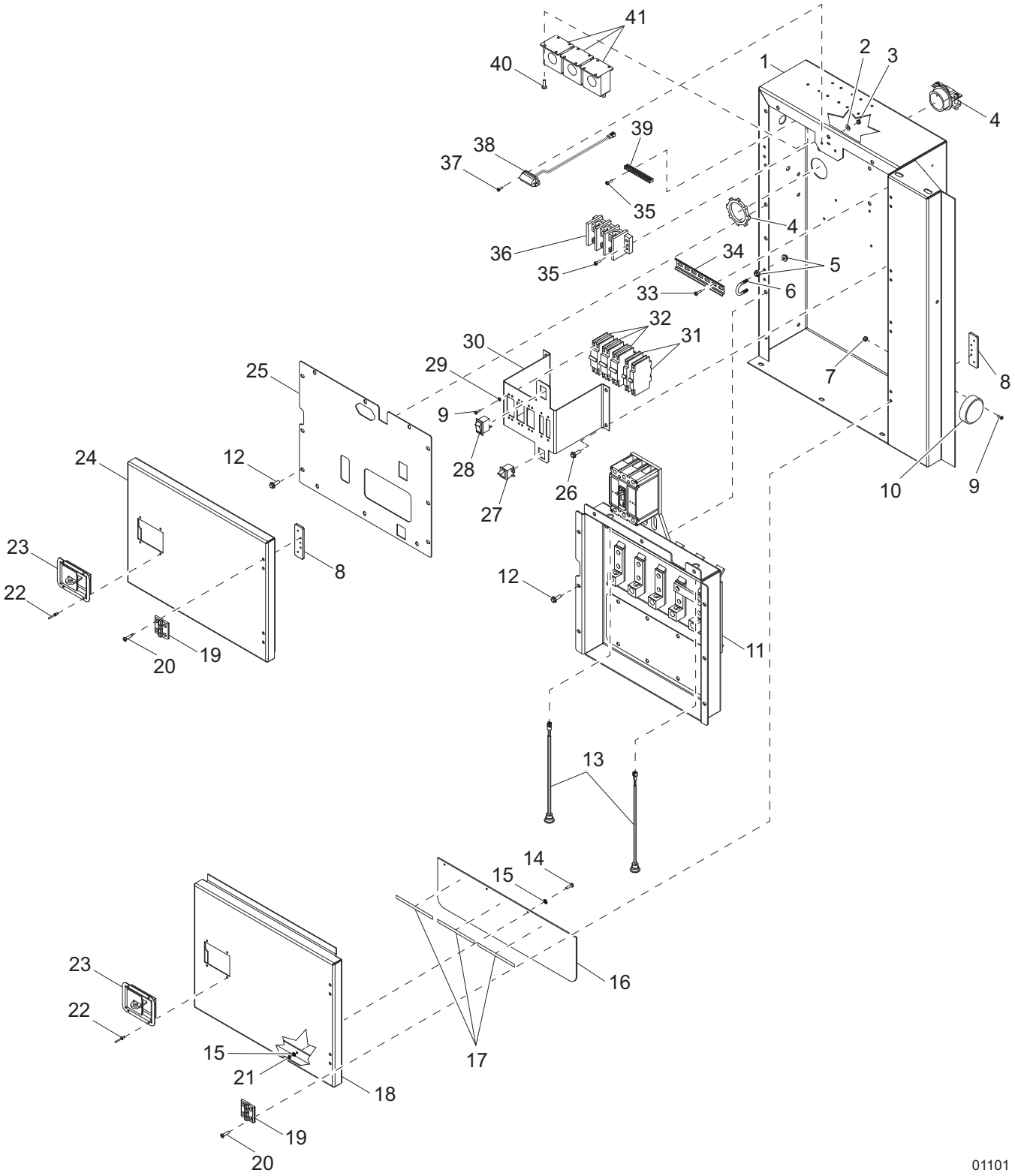

AC BOX ASSEMBLY

Item	Part No.	Qty	Description	Notes
1	37226W	1	Weldment, AC box	
2	60269	2	Washer, #8 flat .433/.036	
3	60270	2	Nut, 8-32 nylock, class 6	
4	65788	1	Strain relief - 2.0 Romex w/nut	
5	60161	8	Nut, .250-20 sflg, G5	
6	63172	2	U-bolt, .250-20 x 1.0 OD tube	
7	60728	4	Nut, 6-32 nylock, G5	
8	37136ZC	8	Plate, hinge back - threaded	
9	60046	20	Screw, 6-32 x .750 pan phil, G2	
10	68262	1	Assembly, LED light - 12V oval	
11	*Page 20*	1	Assembly, lug box	
12	33942	18	Screw, .312-18 x .750 button socket cap, G5	
13	36964	2	Assembly, controls light	
14	60540	4	Screw, 10-24 x .750 pan phil, SS	
15	60067	8	Washer, #10 flat .435/.060, SS	
16	35732	1	Flap, lug door	
17	50192	1.5 ft	Tape, .500 in., double sided, type VHB	
18	35356W	1	Door, lug/cam door	
19	35394	4	Hinge, door	
20	35290	16	Screw, 10-24 x 1.0 flat head phil, SS	
21	60457	4	Nut, 10-24 nylock, G2	
22	60268	8	Rivet, .188 dia. x .126 to .250 grip, SS	
23	37145B	2	Latch, paddle - mini	
24	35355W	1	Door, breaker	
25	37230W	1	Panel, AC box breaker	
26	60616	4	Screw, .312-18 x .750 sflg hex, G5	
27	66089	1	Switch, trigger safety, NO terminals	
28	66995	1	Switch, rocker - on/off	
29	60058	16	Washer, #6 split lock	
30	35387B	1	Bracket, breaker	
31	18091	2	Breaker, 20A, 240V, 1-pole	
32	18092	3	Breaker, 50A, 240V, 2-pole	
33	60062	2	Screw, 10-32 x .750 pan phil, G2	
34	67129	1	Rail, din - 35mm x 7.0 in	
35	60397	4	Screw, 10-32 x 1.0 pan phil, G2	
36	65356	1	Block, terminal - 3 pole, Bussman	
37	60694	2	Screw, 8-32 x .750 pan phil, SS	
38	36963	1	Assembly, license plate light	
39	14204	1	Kit, ground bar	
40	60277	12	Screw, 10-32 x .500 pan phil, G2	
41	65685	3	Transformer, current - terminals (200:5A)	
--	68143	1	Wire group - power box	
--	50187	5.67 ft	Seal, door - D-shaped	Used on item 24
--	50187	4.10 ft	Seal, door - D-shaped	Used on item 18
--	68113	1	Assembly, terminal block - PT2.5, 7 position	
--	37225	1	Assembly, AC box	

OPTIONAL FEATURES

Buck Transformer:

--	66340	1	Relay, voltage sensing (132 in, 126 out)
--	65644	1	Base, relay - 8 position
--	65461	1	Relay, 30A DPDT 120VAC power

LUG BOX ASSEMBLY

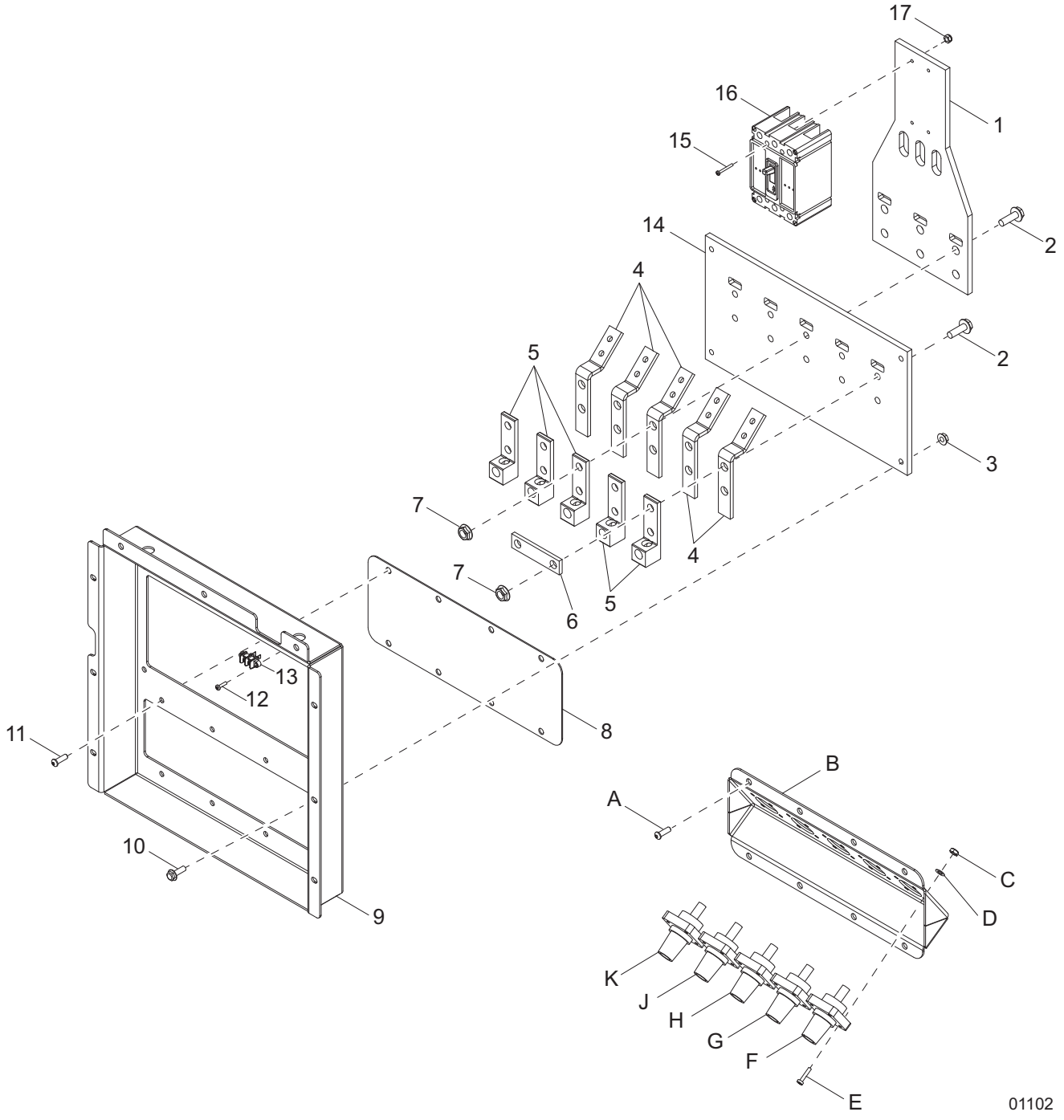

LUG BOX ASSEMBLY

Item	Part No.	Qty	Description	Notes
1	37446	1	Panel, glastic lug/breaker	
2	61103	10	Screw, .500-13 x 1.750 sflg hex	
3	60095	4	Nut, .312-18 sflg	
4	35389	5	Bus, lug	
5	65677	5	Lug, terminal single - 2 hole	
6	37218	1	Bus, neutral to ground	
7	60098	10	Nut, .500-13 sflg	
8	37336B	1	Plate, cams blockoff	
9	37219W	1	Panel, lug/cam	
10	61091	4	Screw, .312-18 x 1.0 sflg hex, G5	
11	33942	8	Screw, .312-18 x .750 button socket cap, G5	
12	60488	2	Screw, 8-32 x .750 pan phil, G2, self tapping	
13	68080	1	Block, terminal - 2 pos. feed thru	
14	35388	1	Panel, glastic lug	
15	60159	4	Screw, M4-.70 x 45 pan phil, G4.8	
16	65452	1	Breaker, 225A	
17	60051	4	Nut, M4-.7 nylock, G8.8	
--	37222	1	Assembly, lug box	
OPTIONAL FEATURES				
Cam Locks:				
A	33942	8	Screw, .312-18 x .750 button socket cap, G5	
B	37221B	1	Panel, cam lock	
C	60061	20	Nut, 10-32 nylock	
D	60237	20	Washer, #10 flat .495/.036	
E	60397	20	Screw, 10-32 x 1.0 pan phil, G2	
F	66041	1	Connector, cam lock flange female, 400A, green	
G	66040	1	Connector, cam lock flange female, 400A, white	
H	65553	1	Connector, cam lock flange female, 400A, blue	
J	65552	1	Connector, cam lock flange female, 400A, red	
K	65551	1	Connector, cam lock flange female, 400A, black	
--	68179	1	Wire group - cam locks, single	

BOTTOM REAR BOX ASSEMBLY

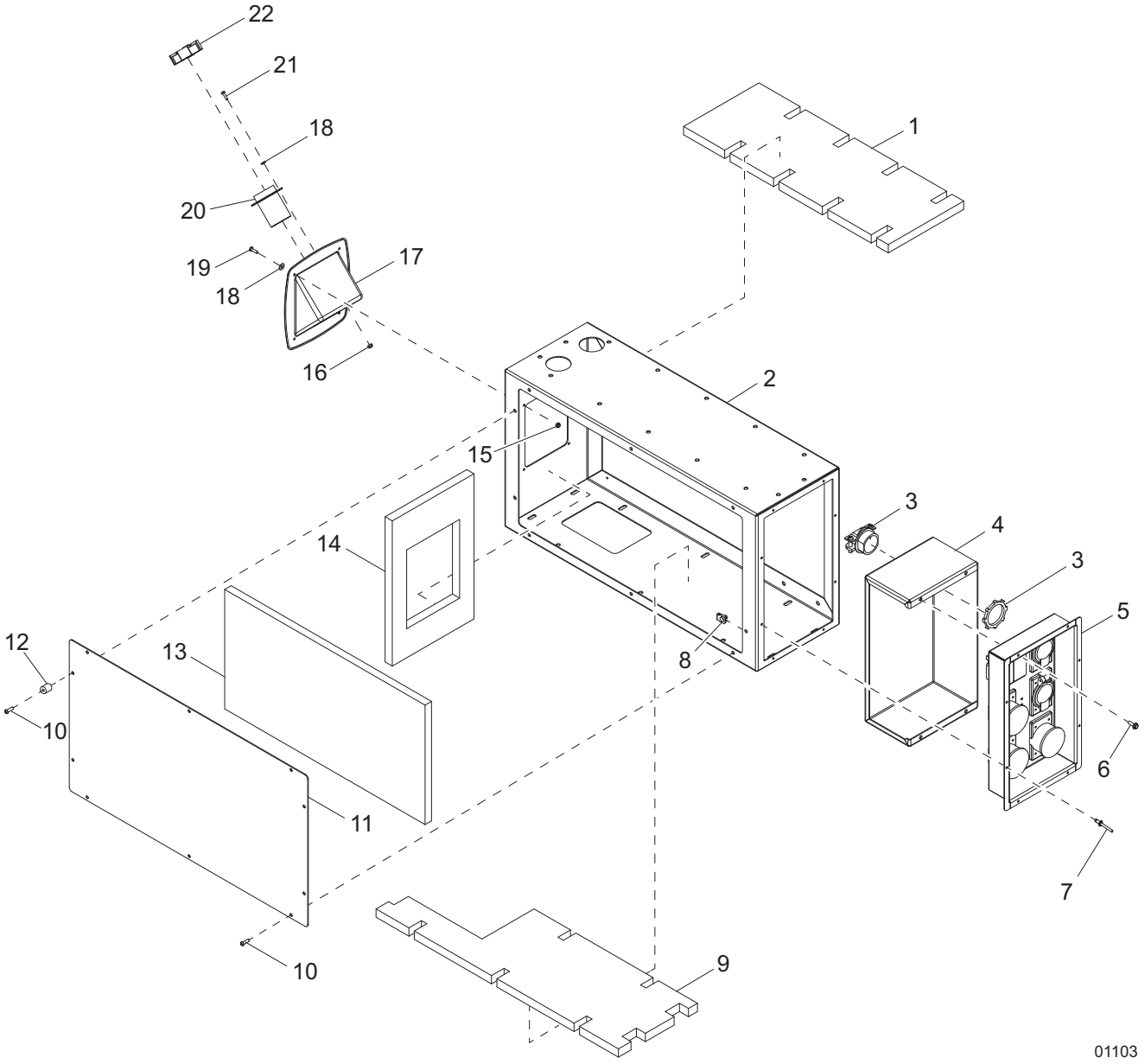

BOTTOM REAR BOX ASSEMBLY

Item	Part No.	Qty	Description	Notes
1	37118	1	Foam, bottom rear box - top	
2	35413W	1	Box, bottom rear	
3	65788	1	Strain relief - 2.0 Romex w/nut	
4	37229B	1	Panel, buck transformer mounting	
5	*Page 24*	1	Assembly, receptacle panel	
6	60479	4	Screw, .250-20 x 1.0 sflg hex, G5	
7	60260	8	Rivet, .188 dia. x .375 to .500 grip, SS	
8	61143	10	Nut, .250-20 U-clip - short type	
9	37117	1	Foam, bottom rear box - lower	
10	68070	10	Screw, .250-20 x 1.0 button hex, SS	
11	37231W	1	Panel, bottom rear box	
12	37869	2	Bumper, round - 1.25 dia. x 1.25H	
13	37113	1	Foam, bottom rear box - face	
14	37116	1	Foam, bottom rear box - side	
15	60457	4	Nut, 10-24 nylock, G2	
16	60530	3	Nut, 10-24 nylock, SS	
17	18506	1	Port, fuel fill	
18	60067	7	Washer, #10 flat .435/.060, SS	
19	60540	4	Screw, 10-24 x .750 pan phil, SS	
20	37626B	1	Weldment, filler tube and flange - 2.75 in. OD	
21	60529	3	Screw, 10-24 x .6258 pan phil, SS	
22	18648	1	Cap, fuel fill w/gasket	
--	68165	1	Wire group - receptacles	
--	50197	8.8 ft	Weatherstripping - .06 x 1.0	
--	35416	1	Assembly, bottom rear box	

RECEPTACLE PANEL ASSEMBLY

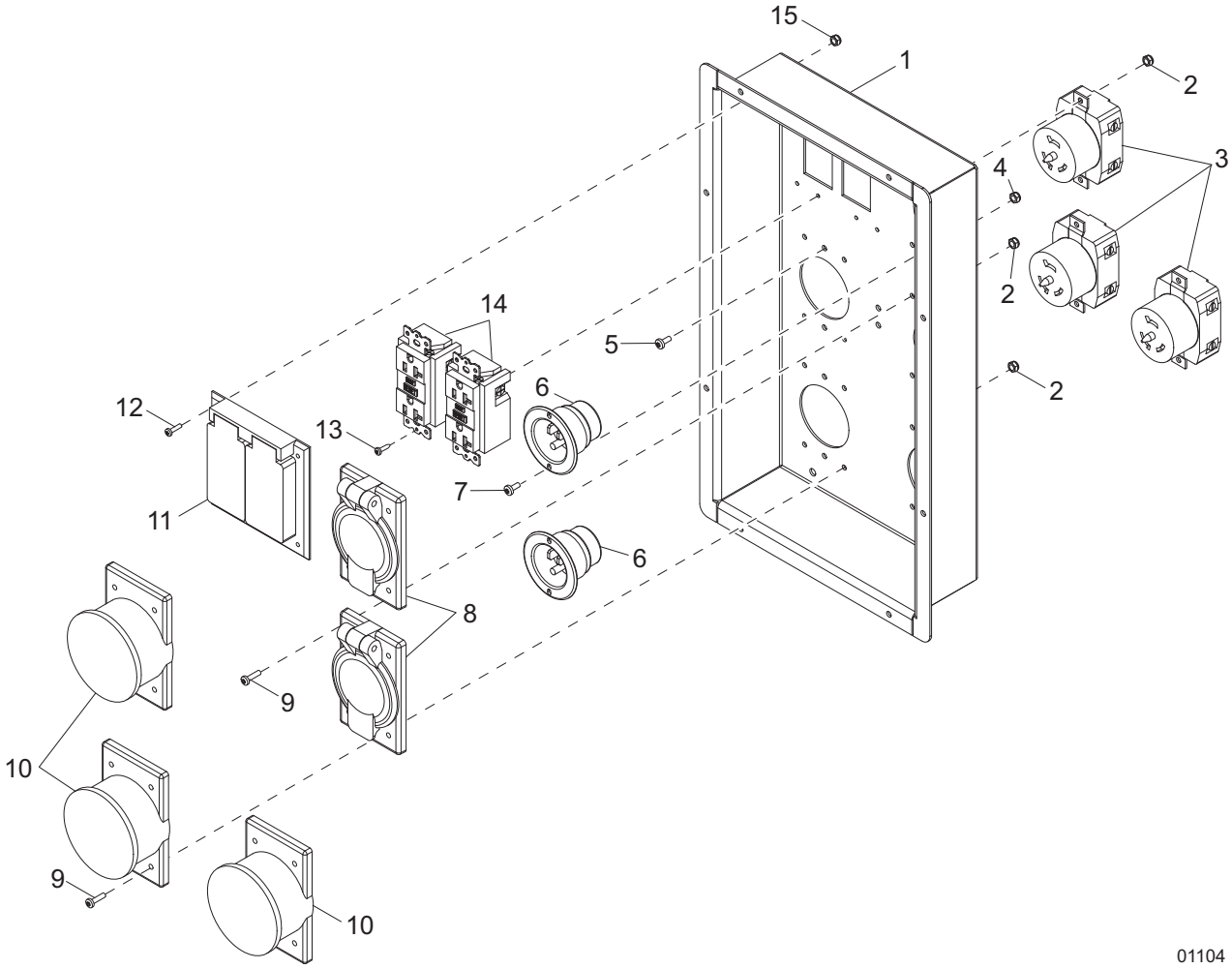

RECEPTACLE PANEL ASSEMBLY

Item	Part No.	Qty	Description	Notes
1	35415B	1	Panel, receptacle	
2	60270	26	Nut, 8-32 nylock, class 6	
3	18089	3	Receptacle, 240V/50A twist-lock	
4	60728	4	Nut, 6-32 nylock, G5	
5	62054	6	Screw, 8-32 x .500 pan phil, SS	
6	65285	2	Receptacle, 120V/15A inlet (Edison)	
7	61193	4	Screw, 6-32 x .375 pan phil, SS	
8	36939	2	Cover, receptacle - weatherproof 20/30A	
9	60694	20	Screw, 8-32 x .750 pan phil, SS	
10	65467	3	Cover, receptacle - weatherproof 50A twist	
11	15849	1	Cover, receptacle - wealtherproof 20A GFCI dual	
12	62210	4	Screw, 6-32 x .500 pan phil, SS	
13	60424	4	Screw, 6-32 x .750 pan phil, G2, self threading	
14	14130	2	Receptacle, 120V/20A GFCI	
15	60290	4	Nut, 6-32 nylock, SS	
--	35350	1	Assembly, receptacle panel	

CONTROL BOX ASSEMBLY

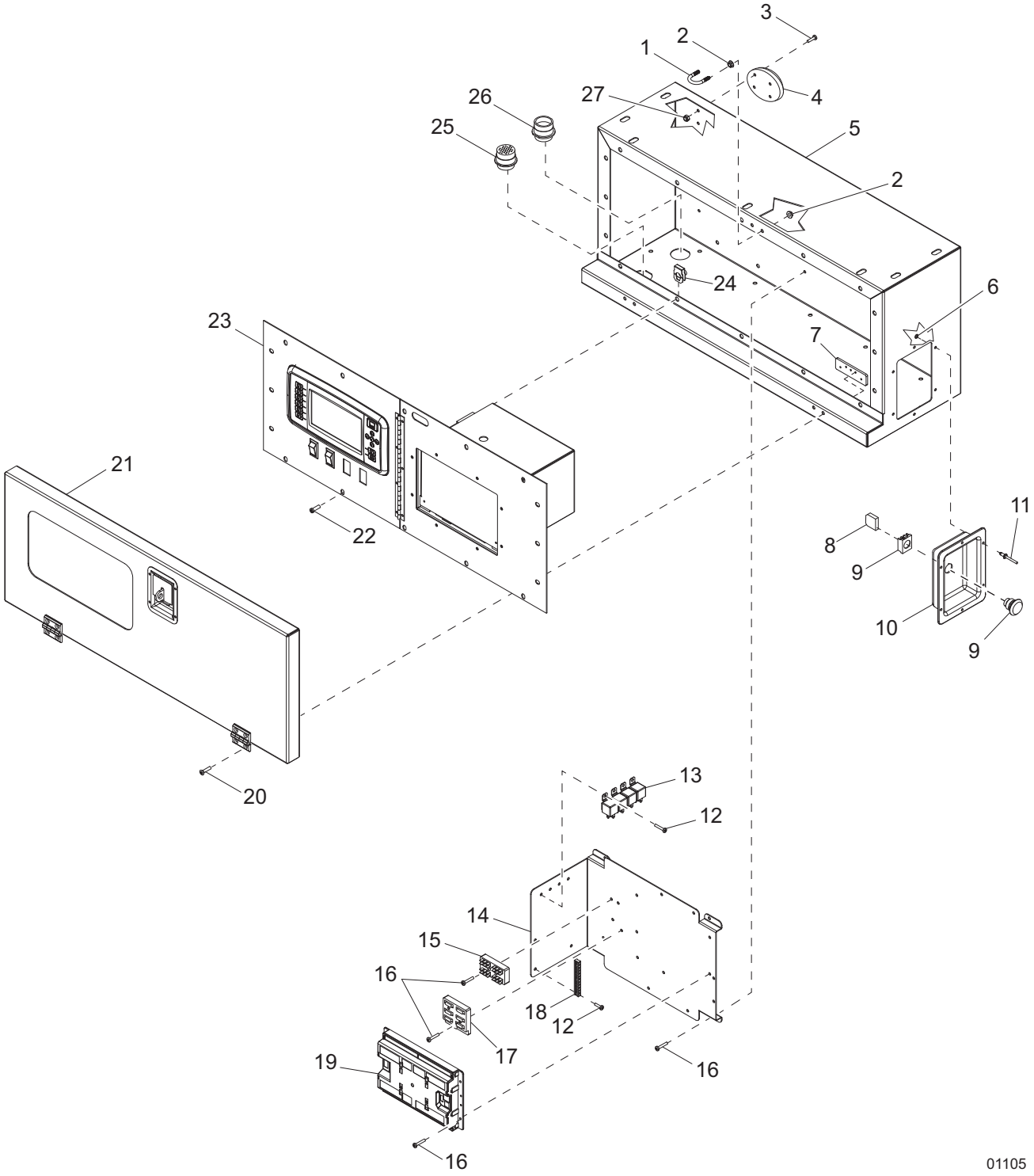

CONTROL BOX ASSEMBLY

Item	Part No.	Qty	Description	Notes
1	68288	1	U-bolt, .250-20 x 1.13 OD x 2.0 leg tube	
2	60161	4	Nut, .250-20 sflg, G5	
3	60046	4	Screw, 6-32 x .750 pan phil, G2	
4	68262	1	Light, assembly - 12V LED oval	
5	35348W	1	Box, control	
6	60067	6	Washer, #10 flat .435/.060, SS	
7	37136ZC	2	Plate, hinge back - threaded	
8	65580	1	Block, emergency stop contactor - NC	
9	65470	1	Switch, emergency stop operator	
10	30645	1	Panel, emergency stop	
11	60260	6	Rivet, .188 dia. x .375 to .500 grip, SS	
12	60062	6	Screw, 10-32 x .750 pan phil, G2	
13	68106	4	Relay, 12V 30/50A NO w/diode	
14	37481W	1	Bracket, DC controls	
15	66992	1	Block, terminal - 4 x 6 push-on	
16	60277	12	Screw, 10-32 x .500 pan phil, G2	
17	68203	1	Fuse holder, 6 bank, type mini	
18	14204	1	Kit, ground bar	
19	68135	1	Program, std tank	
20	35290	4	Screw, 10-24 x 1.0 flat phil, SS	
21	*Page 30*	1	Assembly, control door	
22	68070	16	Screw, .250-20 x 1.0 button hex, SS	
23	*Page 28*	1	Assembly, control panel	
24	61143	16	Nut, .250-20 U-clip - short type	
25	28704	1	Connector, Deutsch 31 position receptacle	
26	65309	1	Connector, Deutsch 21 position receptacle	
27	60728	4	Nut, 6-32 nylock, G5	
--	68130	1	Harness, control box	
--	35371	1	Assembly, control box	

CONTROL PANEL ASSEMBLY

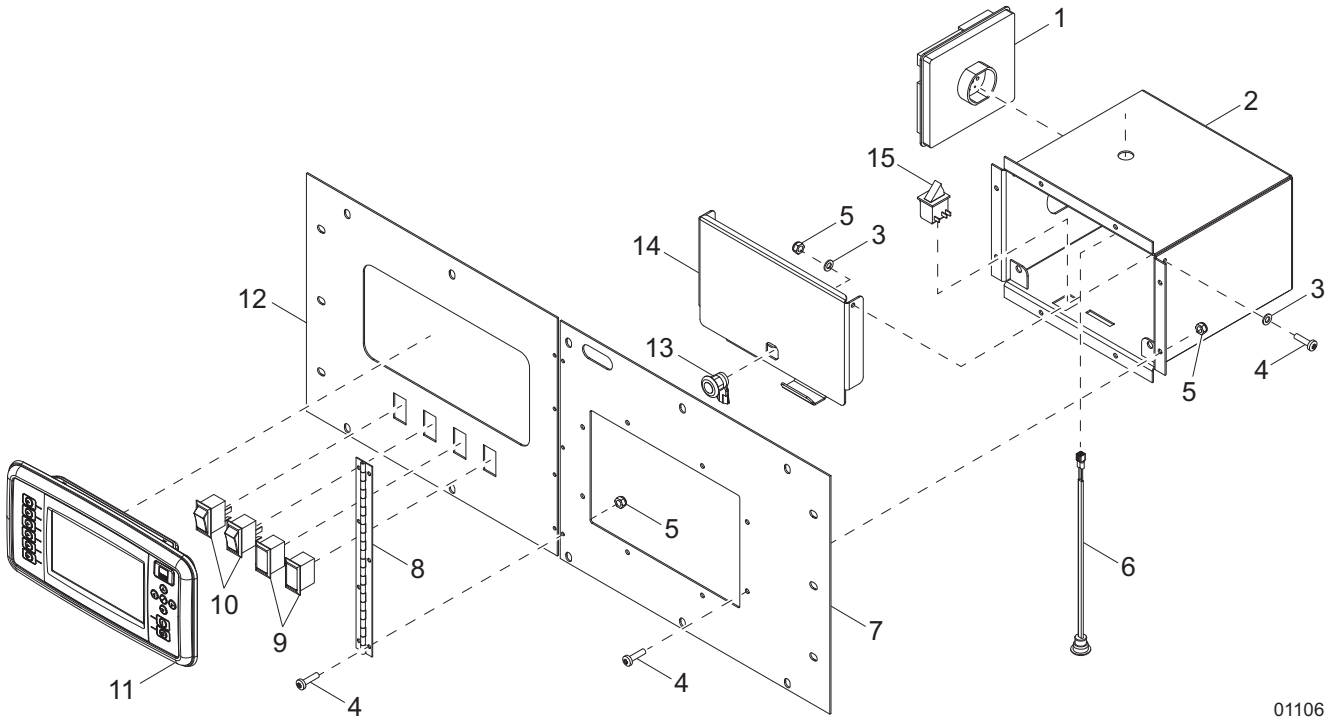

CONTROL PANEL ASSEMBLY

Item	Part No.	Qty	Description	Notes
1	68015	1	Regulator, voltage - PM600	
2	37129W	1	Weldment, phase switch box	
3	60237	4	Washer, #10 flat .495/.036	
4	60277	17	Screw, 10-32 x .500 pan phil, G2	
5	60061	17	Nut, 10-32 nylock	
6	36964	1	Assembly, controls light	
7	37490W	1	Panel, phase switch	
8	13677	1	Hinge, continuous - 11.0 in	
9	34439	2	Plug, panel switch - 1.91 x .96	
10	66995	2	Switch, rocker - on/off	
11	33157	1	Display, 7 in. DSE	
12	37496W	1	Panel, PZ display	
13	12547	1	Assembly, cam lock - quarter turn	
14	37824W	1	Door, phase switch	
15	66089	1	Switch, trigger safety - NO terminals	

CONTROL DOOR ASSEMBLY

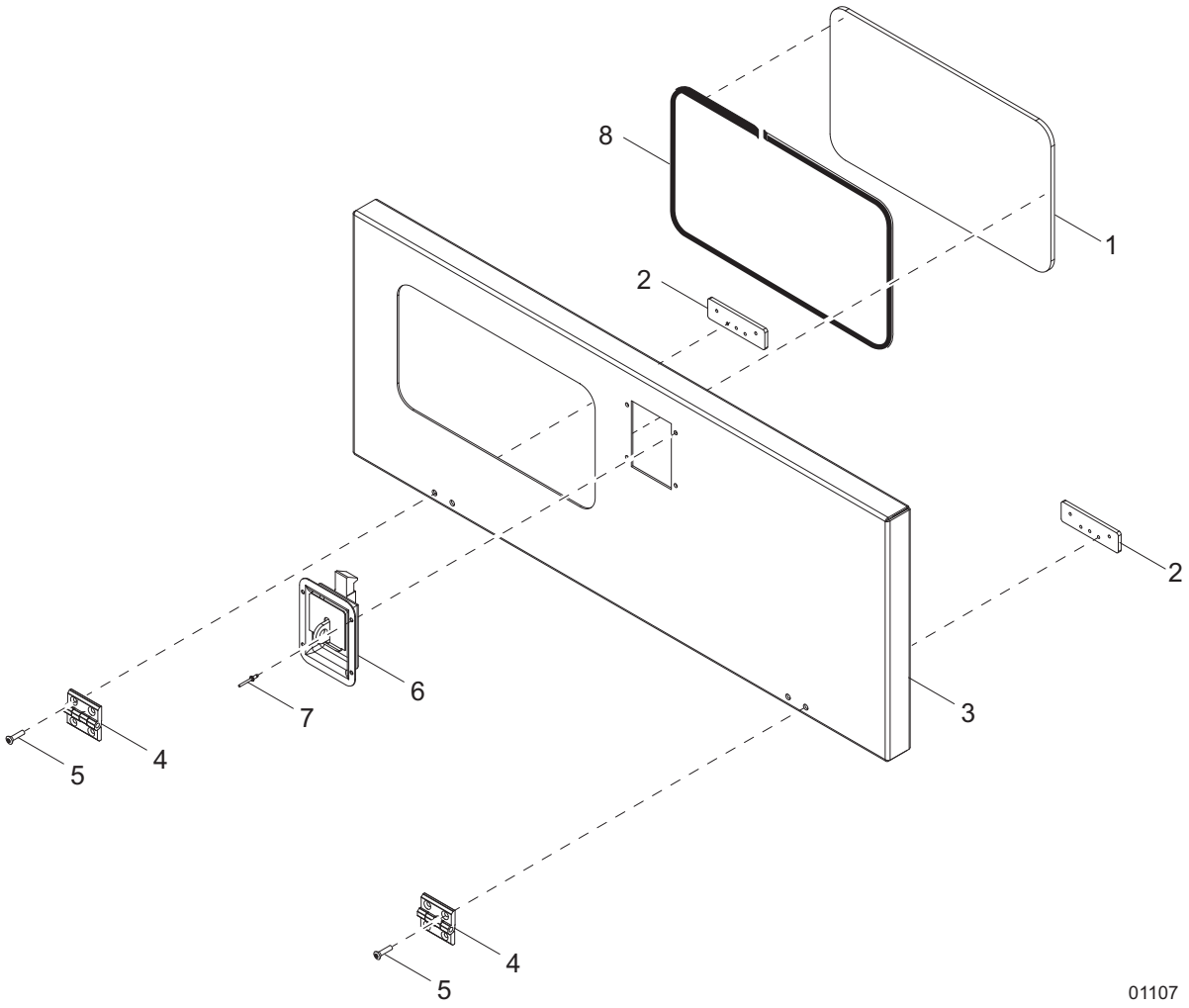

CONTROL DOOR ASSEMBLY

Item	Part No.	Qty	Description	Notes
1	35854	1	Window, control door - UV	
2	37136ZC	2	Plate, hinge back	
3	35346W	1	Door, control	
4	35394	2	Hinge, door	
5	35290	4	Screw, 10-24 x 1.0 flat head phil, SS	
6	37145B	1	Latch, paddle - mini, black	
7	60268	4	Rivet, .188 dia. x .126 to .250 grip, SS	
8	50192	4 ft	Tape, .500 in., double sided, type VHB	
--	50187	8.08 ft	Seal, door - D-shaped (.750)	
--	35853	1	Assembly, control door	

LIFT STRUCTURE TO SKID ASSEMBLY

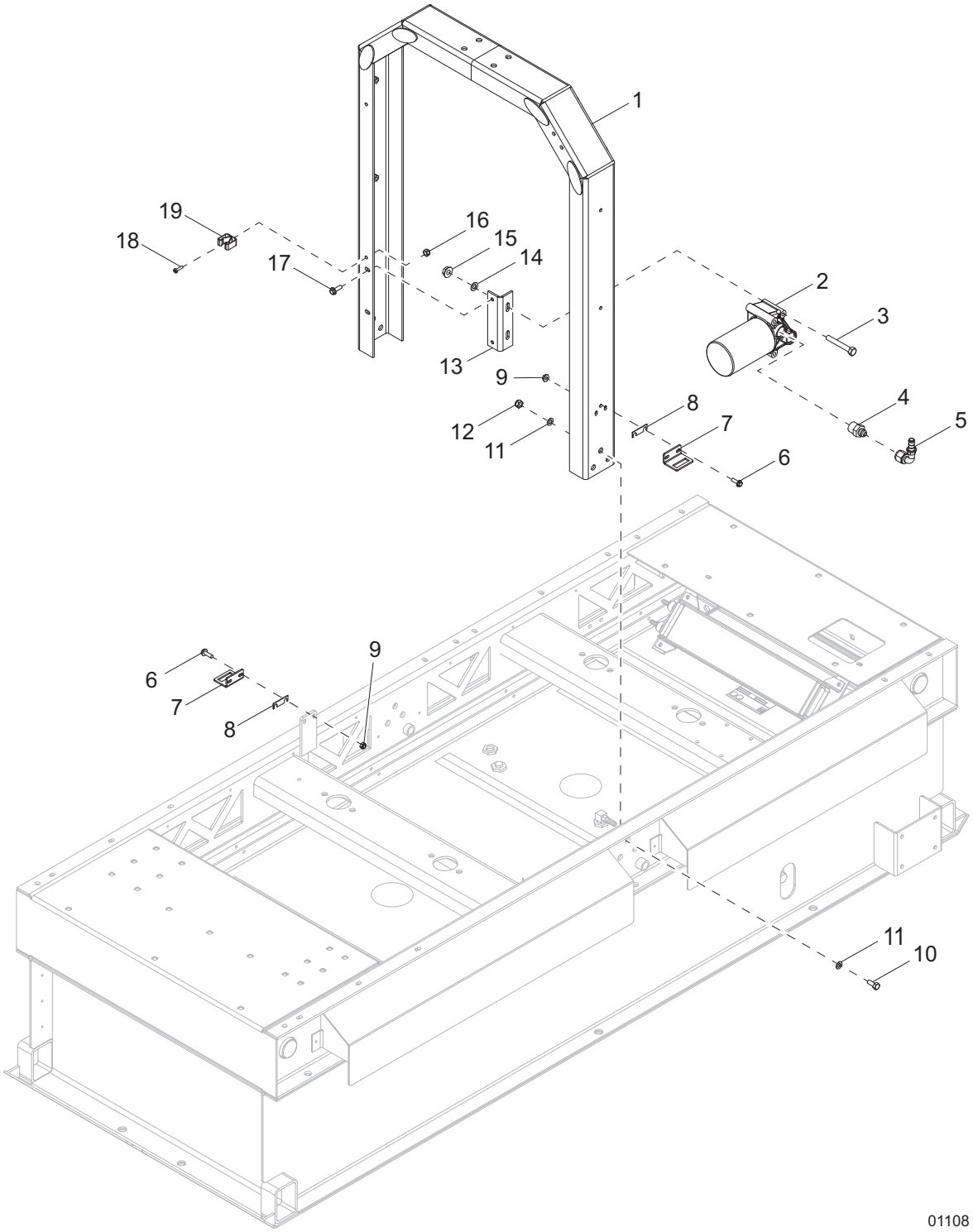

LIFT STRUCTURE TO SKID ASSEMBLY

Item	Part No.	Qty	Description	Notes
1	37054B	1	Weldment, lift structure	
2	36906	1	Element, oil filter	
3	60973	2	Screw, .312-18 x 4.5 std hex, G5	
4	63363	2	Fitting, strt - .750-14BSPP x .750-16 JIC	
5	62205	2	Fitting, 90° - .750-16 JIC x #8 push-lok	
6	60523	4	Screw, .250-20 x .875 sflg hex	
7	37954B	2	Bracket, door latch	
8	38459	4	Shim, door latch	
9	60161	4	Nut, .250-20 sflg, G5	
10	60388	6	Screw, .500-13 x 1.50 std hex, G5	
11	60309	12	Washer, .500 flat 1.060/.090	
12	62221	6	Nut, .500-13 nylock, G5	
13	37488B	1	Weldment, oil filter bracket	
14	60243	2	Washer, .250 flat .735/.060	
15	60095	2	Nut, .312-18 sflg	
16	60061	1	Nut, 10-32 nylock	
17	60616	2	Screw, .312-18 x .750 sflg hex, G5	
18	60398	1	Screw, 10-32 x .500 pan phil, SS	
19	19041	1	Clip, spring holder	

EXHAUST SYSTEM ASSEMBLY

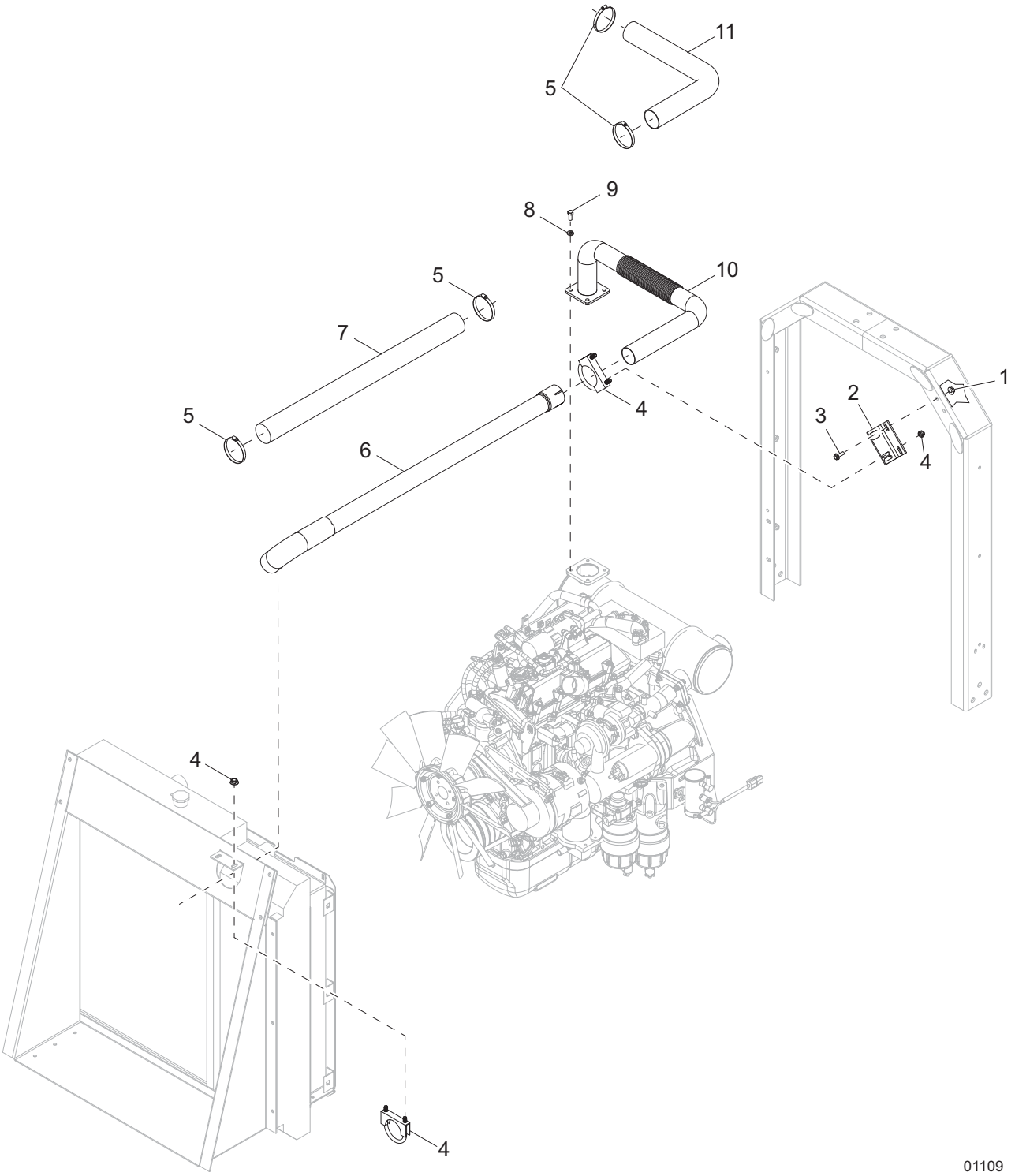

EXHAUST SYSTEM ASSEMBLY

Item	Part No.	Qty	Description	Notes
1	60095	2	Nut, .312-18 sflg	
2	37690B	1	Bracket, exhaust support	
3	61091	2	Screw, .312-18 x 1.0 sflg hex, G5	
4	18823	2	Clamp, muffler - 2.0	
5	60316	4	Clamp, hose - SAE 032 (1.56-2.50)	
6	37809	1	Pipe, exhaust	
7	26478	3.33 ft	Sleeve, high temp - 2.0	
8	60029	4	Washer, M8 split lock	
9	61204	4	Screw, M8-1.25 x 20 std hex, G10.9	
10	37497	1	Weldment, exhaust pipe - filter out	
11	26478	2.83 ft	Sleeve, high temp - 2.0	
--	37072	1	Assembly, exhaust system	

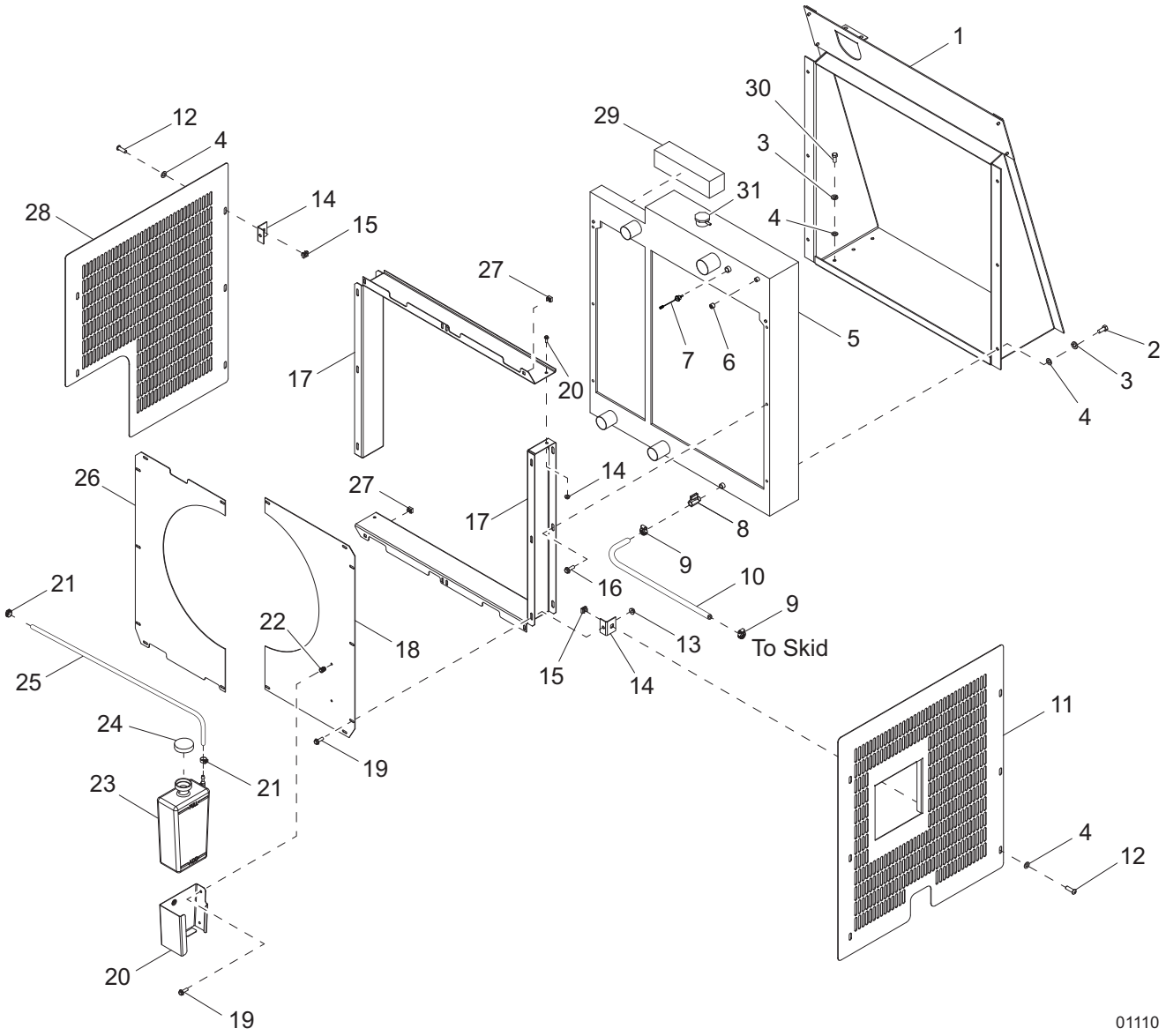
1
30
29
3
31
4
12
4
28
14
15
27
5
7
6
2
3
4
17
20
26
27
14
17
8
9
10
16
21
9
22
18
13
To Skid
25
15
14
11
24
19
21
23
4
12
20
19
01110

COOLING SYSTEM ASSEMBLY

Item	Part No.	Qty	Description	Notes
1	37442B	1	Assembly, bulkhead	
2	60687	6	Screw, .312-18 x .750 std hex, SS	
3	60701	12	Washer, .312 split lock, SS	
4	60340	23	Washer, .312 flat .875/.040, SS	
5	27675	1	Radiator	
6	60776	1	Fitting, plug - .250NPT hex flush mount head, brass	
7	68206	1	Sensor, low coolant - wet sinking	
8	62032	1	Valve, ball - .375NPTF, mini	
9	14216	2	Clamp, hose - SAE 004 (.21-.62) miniature	
10	50018	.85 ft	Hose, fuel - .312 ID, 50 psi, SAE 30R7	
11	37460B	1	Guard, right	
12	60654	11	Screw, .312-18 x 1.0 button hex, SS	
13	60161	14	Nut, .250-20 sflg, G5	
14	37471B	6	Bracket, fan guard	
15	15425	6	Nut, .312-18 cage	
16	60616	6	Screw, .312-18 x .750 sflg hex, G5	
17	33678B	2	Shroud, radiator	
18	37060B	1	Panel, fan shroud - right	
19	60175	18	Screw, .250-20 x .500 sflg hex, G5	
20	26211B	1	Bracket, overflow jug	
21	63192	2	Clamp, crimping band - .464 in	
22	62132	2	Insert, threaded .250-20 splined .027-.165 grip	
23	24952	1	Jug, overflow - 2.5 qt	
24	19714	1	Cap, overflow jug	
25	50018	1.67 ft	Hose, fuel - .312 ID, 50 psi, SAE 30R7	
26	37059B	1	Panel, fan shroud - left	
27	15424	2	Nut, .250-20 cage, G5	
28	37459B	1	Guard, left	
29	35240	2	Foam, CAC sealing - top/bottom	
30	60507	6	Screw, .312-18 x 1.0 std hex, SS	
31	19219	1	Cap, radiator pressure - 14.7 psi	
--	37056	1	Assembly, cooling system	

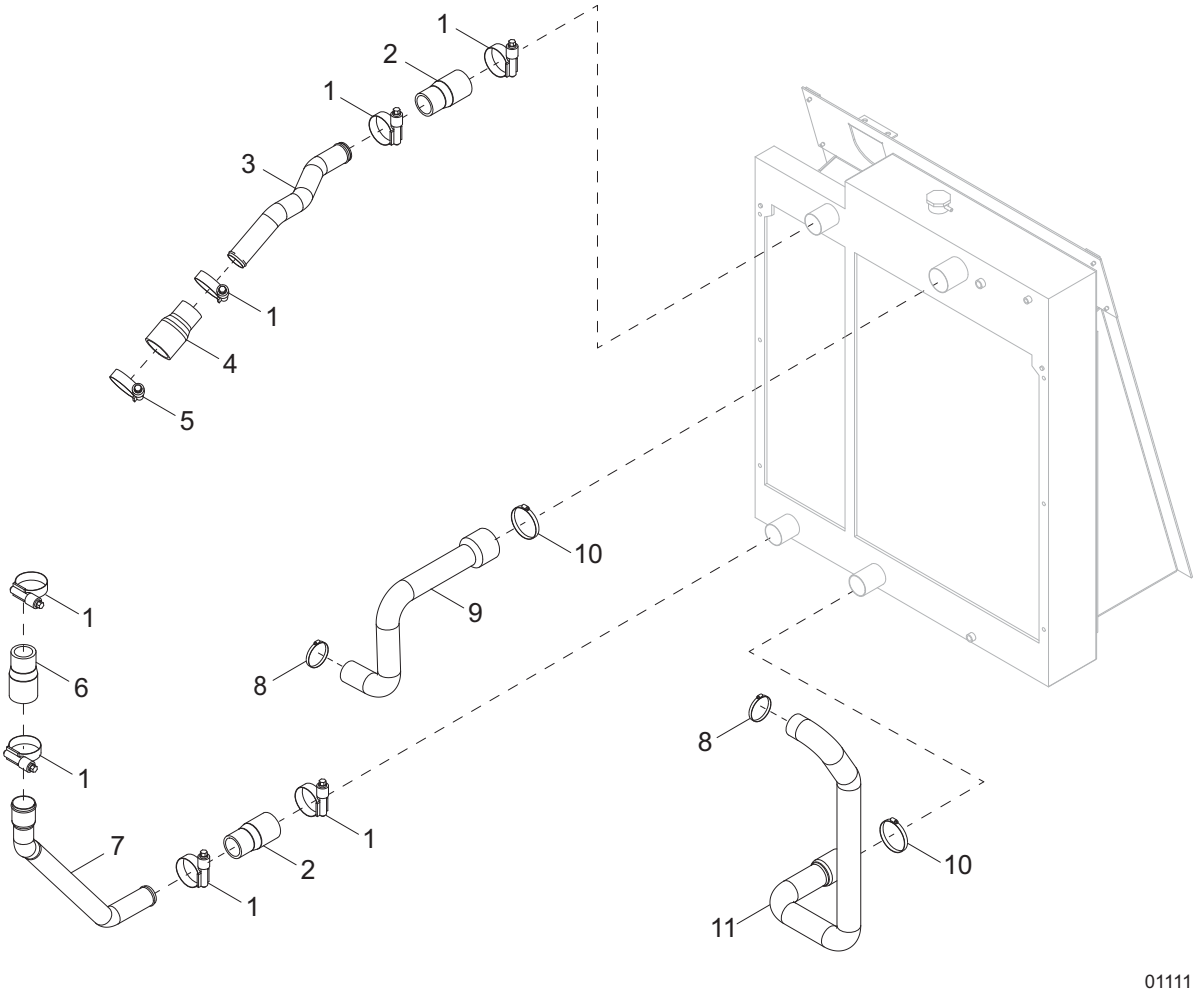
1
2
1
3
1
4
5
10
9
8
1
6
1
7
2
1
1
8
10
11
01111

COOLING SYSTEM HOSES

Item	Part No.	Qty	Description	Notes
1	60663	7	Clamp, hose - constant torque 1.25-2.13	
2	33815	2	Hose, CAC - 1.50 x 1.75 x 4.0L	
3	36828	1	Pipe, CAC - out	
4	32848	1	Hose, CAC - 1.50 x 2.0 x 4.0L	
5	60660	1	Clamp, hose - constant torque 1.75-2.625	
6	33814	1	Hose, CAC - 1.38 x 1.75 x 4.0L	
7	36826	1	Pipe, CAC - in	
8	60316	2	Clamp, hose - SAE 032 (1.56-2.50)	
9	36831	1	Hose, radiator - upper	
10	15422	2	Clamp, hose - SAE 020 (.75-1.75)	
11	36830	1	Hose, radiator - lower	

ENGINE AND GENERATOR TO SKID ASSEMBLY

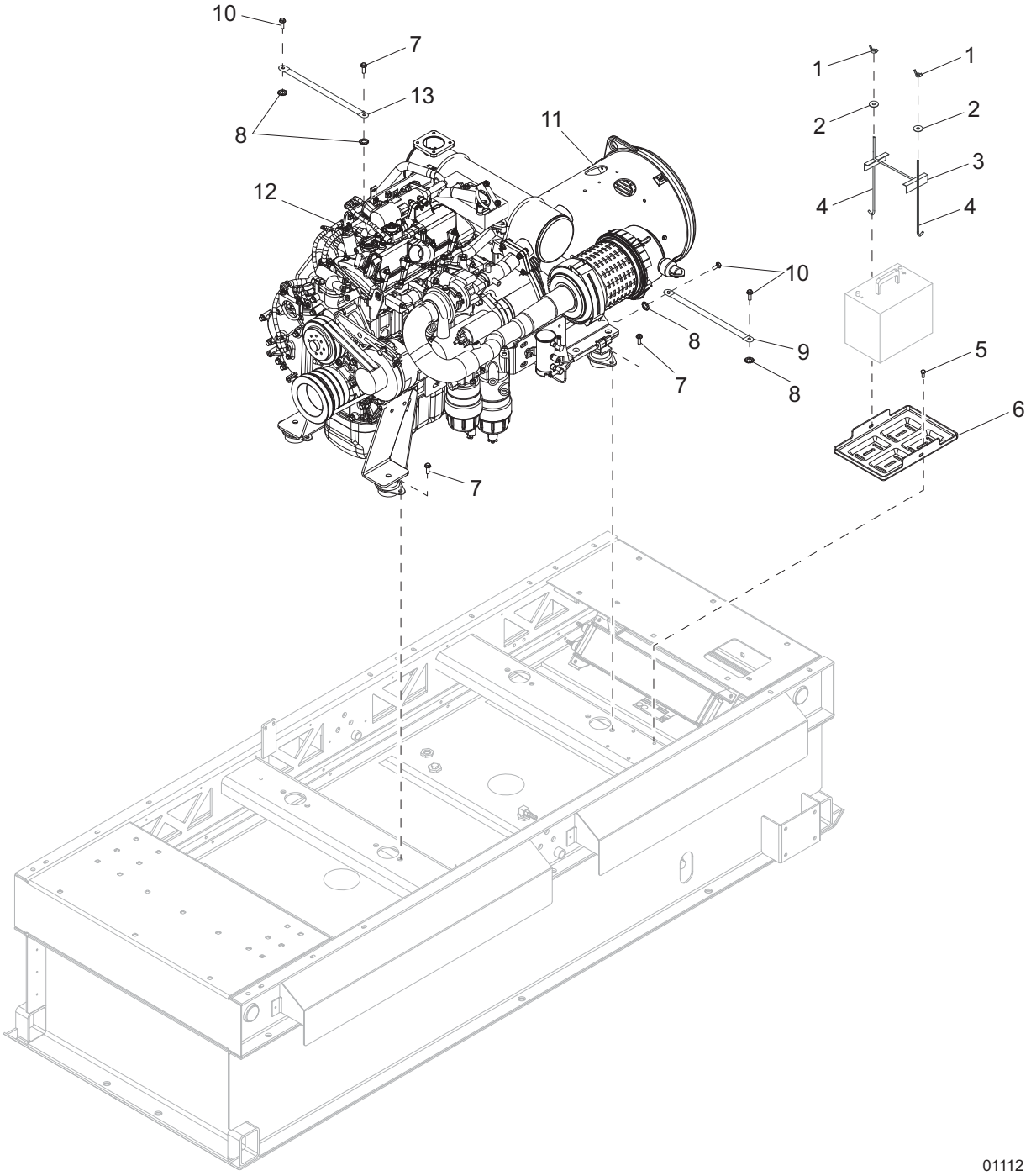

ENGINE AND GENERATOR TO SKID ASSEMBLY

Item	Part No.	Qty	Description	Notes
1	60090	2	Nut, .250-20 wing, G5	Included w/item 4
2	60089	2	Washer, .265 fender 1.250/.060	Included w/item 4
3	14682	1	Bracket, battery hold-down	
4	60820	2	Bolt, J - .250-20 x 9.0	
5	61091	4	Screw, .312-18 x 1.0 sflg hex, G5	
6	14145	1	Battery tray	
7	60018	9	Screw, M10-1.50 x 20 sflg hex, class 90	
8	60053	4	Washer, .375 external star	
9	19042	1	Strap, braided ground - 10 in	
10	60353	3	Screw, .375-16 x 1.0 flg hex, self tapping, G2	
11	*Page 50*	1	Assembly, generator	
12	*Page 42*	1	Assembly, engine	
13	22438	1	Strap, braided ground - 16 in. (.500 hole)	
--	33766	1	Harness, Isuzu engine	
--	68167	1	Harness, main	
--	68112	1	Harness, engine extension	

ENGINE ASSEMBLY - LEFT SIDE

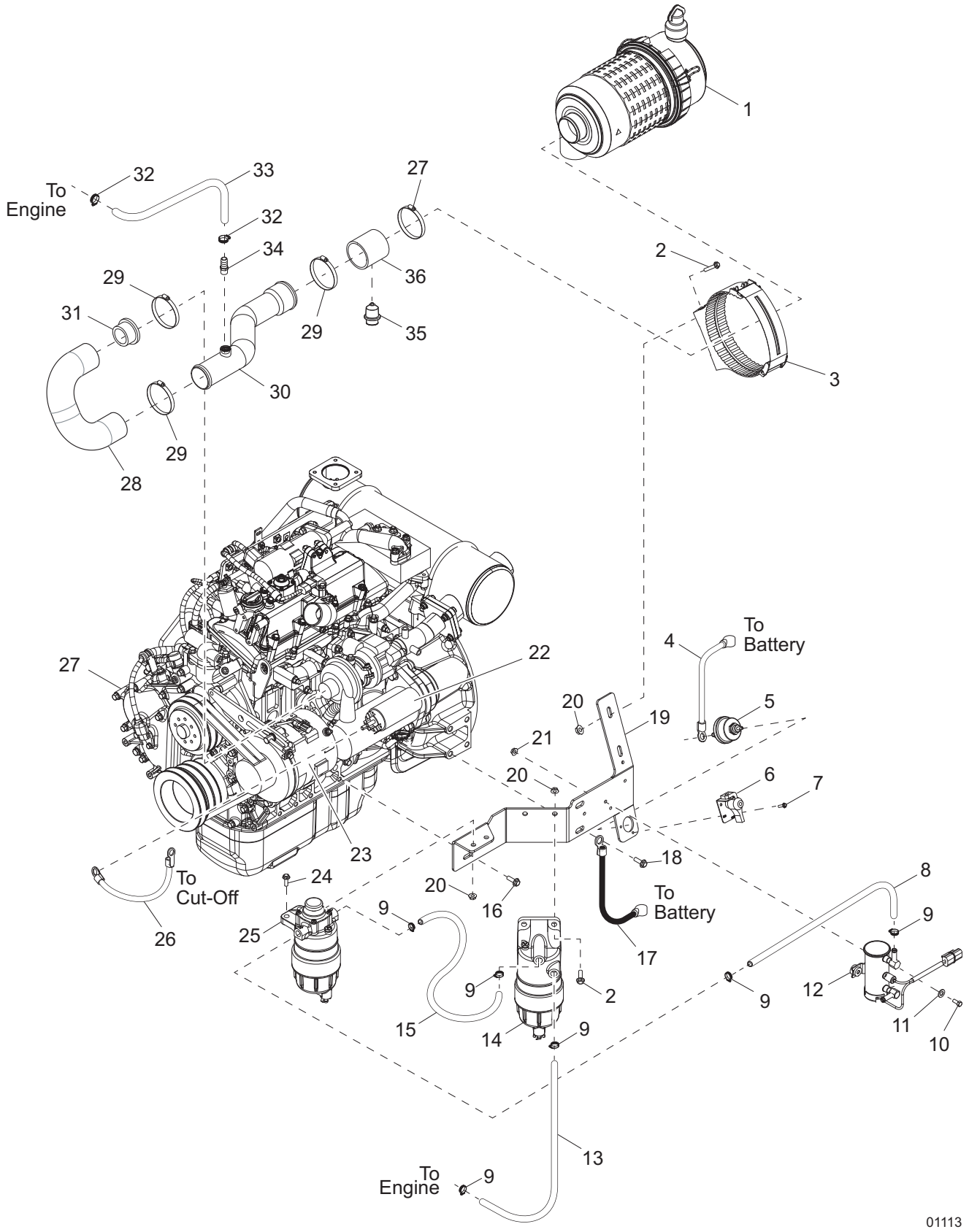

ENGINE ASSEMBLY - LEFT SIDE

Item	Part No.	Qty	Description	Notes
1	35959	1	Filter, air	
2	61091	4	Screw, .312-18 x 1.0 sflg hex, G5	
3	37480	1	Bracket, air filter	
4	65687	1	Cable, battery - 24 in., 2GA, red w/boot, 3/8 in. lug	
5	65498	1	Switch, disconnect	
6	65499	1	Kit, switch lockout lever	
7	60277	2	Screw, 10-32 x .500 pan phil, G2	
8	50051	1.5 ft	Hose, fuel - .375 ID, 50 psi, SAE 30R7	
9	19453	6	Clamp, hose - SAE 006 (.37-.87)	
10	60393	2	Screw, .250-20 x 1.0 std hex, G5	
11	60243	2	Washer, .250 flat .735/.060	
12	33764	1	Pump, fuel	
13	50051	3.33 ft	Hose, fuel - .375 ID, 50 psi, SAE 30R7	
14	36904	1	Element, fuel filter - final	
15	50051	1.25 ft	Hose, fuel - .375 ID, 50 psi, SAE 30R7	
16	60018	1	Screw, M10-1.50 x 20 sflg hex, class 90	
17	65686	1	Cable, battery - 245 in., 2GA, black, 1/2 in. lug	
18	60072	2	Screw, M12-1.75 x 25 sflg hex, G10.9	
19	37779B	1	Bracket, fuel pump/filter	
20	60095	6	Nut, .312-18 sflg	
21	60161	2	Nut, .250-20 sflg, G5	
22	36222	1	Starter	
23	36661	1	Alternator	
24	60516	2	Screw, .312-18 x 1.250 sflg hex	
25	36905	1	Element, fuel filter - primary	
26	68265	1	Cable, battery - 22 in., 2GA, red, 3/8 in. - 3/8 in	
27	33981	1	Engine, Isuzu - 4LE2XAGV01, T4F, SAE #4	
28	37065	1	Hose, air intake - engine inlet	
29	60316	4	Clamp, hose - SAE 032 (1.56-2.50)	
30	37448	1	Weldment, air intake pipe	
31	33782	1	Insert, hose reducer - 1.50-2.0	
32	60365	2	Clamp, hose - SAE 010 (.56-1.06)	
33	50201	1.83 ft	Hose, .625 in., 200 psi, class A	
34	25931	1	Fitting, strt - .375NPT x .625 barb	
35	24518	1	Gauge, filter restriction	
36	37787	1	Hose, straight connection w/port	
--	35962	1	Element, air filter	
--	36663	1	Thermostat	
--	37455	1	Assembly, battery connection	

ENGINE ASSEMBLY - RIGHT SIDE

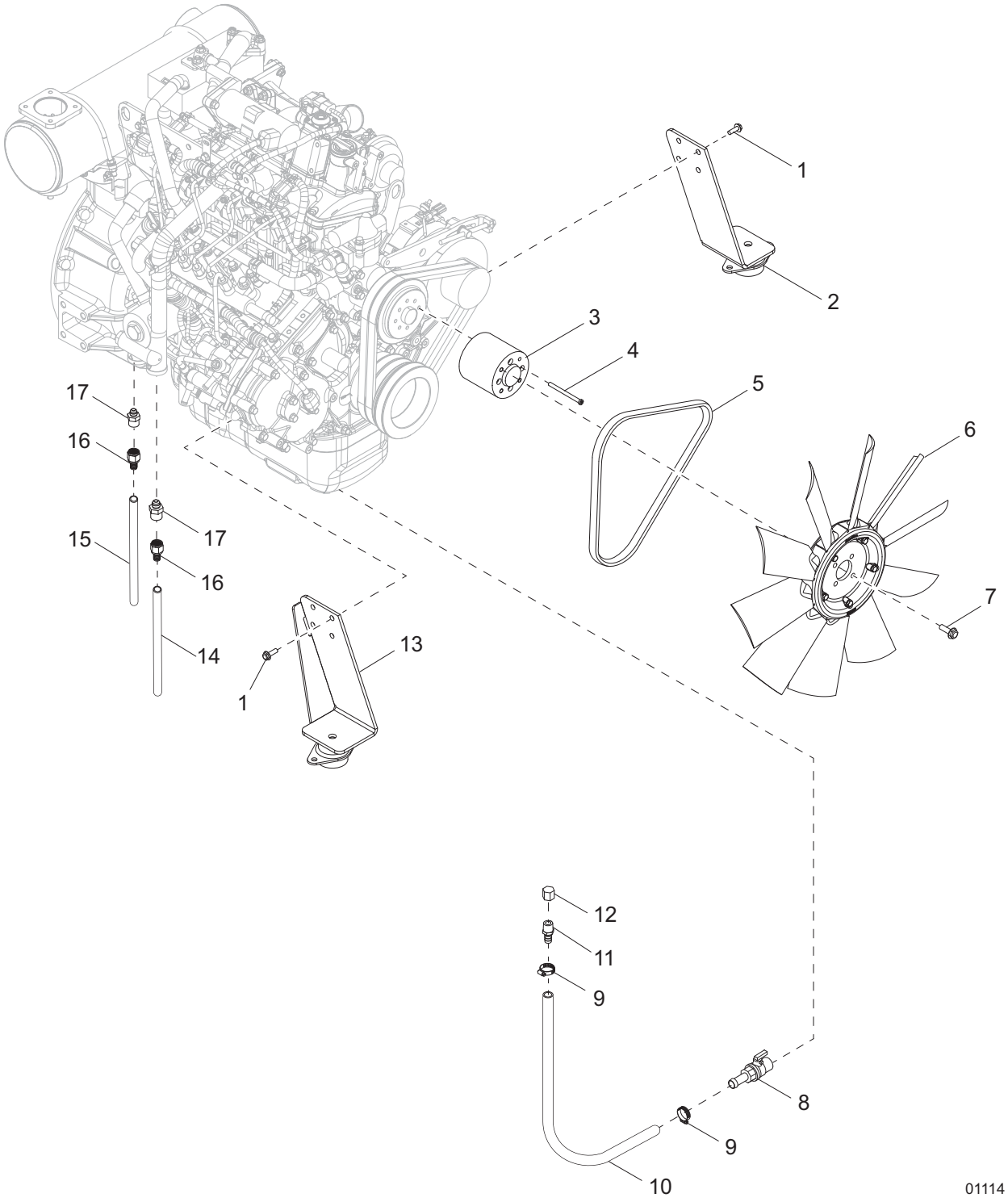

ENGINE ASSEMBLY - RIGHT SIDE

Item	Part No.	Qty	Description	Notes
1	60018	8	Screw, M10-1.50 x 20 sflg hex, class 90	
2	*Page 48*	1	Assembly, engine mount - left	
3	36817	1	Spacer, fan	
4	68360	4	Screw, M6-1.0 x 90 soc hex, G12.9	
5	36659	1	Belt, fan	
6	33779	1	Fan, engine - 19.0	
7	60616	4	Screw, .312-18 x .750 sflg hex, G5	
8	31408	1	Valve, drain - 24mm-2.0 w/nipple	
9	60365	2	Clamp, hose - SAE 010 (.56-1.06)	
10	50201	4 ft	Hose, .625 in., 200 psi, class A	
11	25931	1	Fitting, strt - .375NPT x .625 barb	
12	19300	1	Fitting, .375FNPT cap hex	
13	*Page 48*	1	Assembly, engine mount - right	
14	50730	1.67 ft	Hose, .500 ID, 300 psi, hi-temp	
15	50730	1.75 ft	Hose, .500 ID, 300 psi, hi-temp	
16	62203	2	Fitting, strt - .750-16 JIC x #8 push-lok	
17	63363	2	Fitting, strt - .750-14BSPP x .750-16 JIC	
--	36660	1	Cap, oil	
--	36658	1	Dipstick	
--	36351	1	Plug, oil	
--	36352	1	Gasket, oil plug	
--	36657	1	Sensor, coolant temperature	
--	36656	1	Sensor, oil pressure	
--	36368	1	Sensor, air temperature	

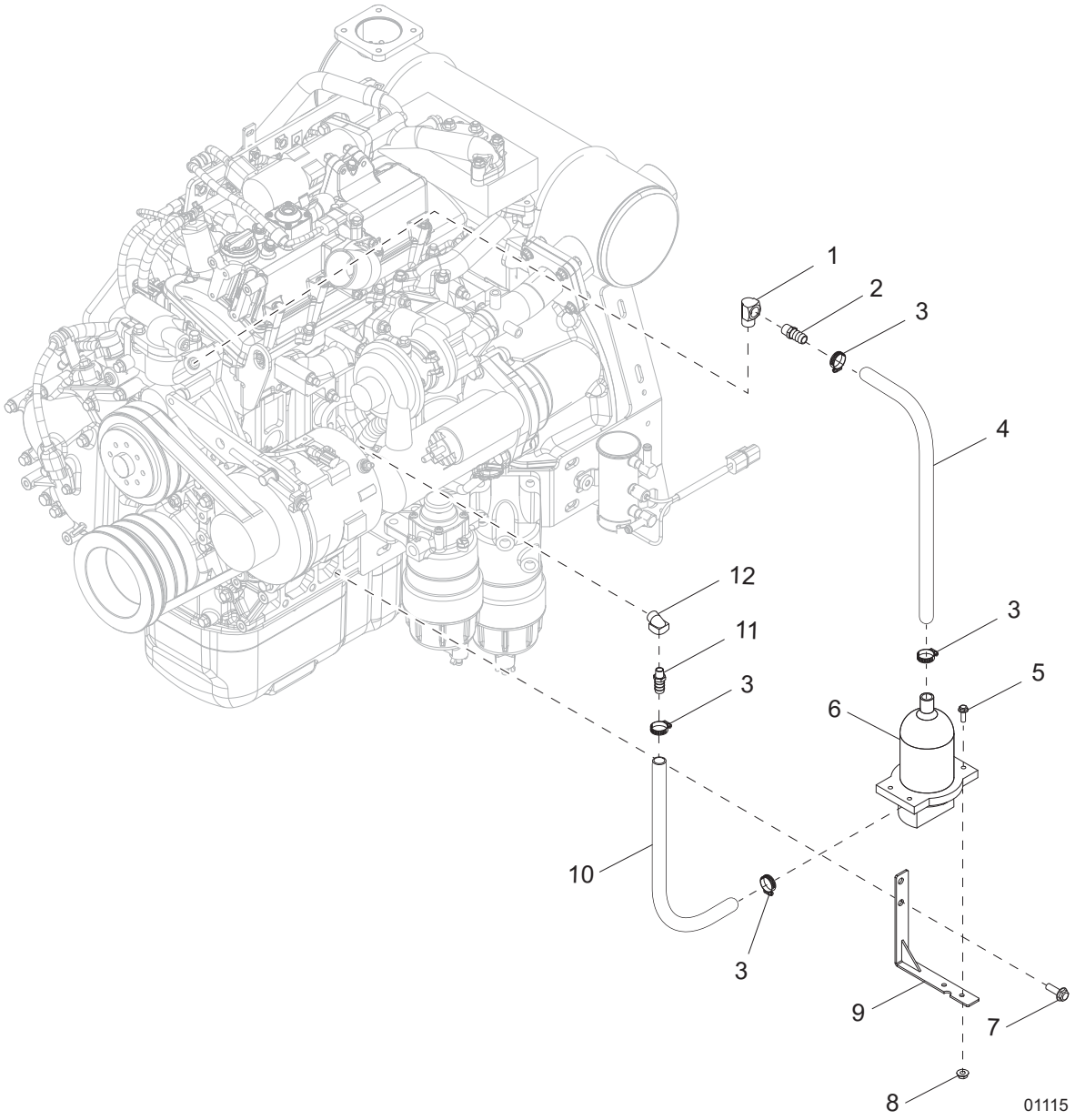
1
2
3
4
12
3
11
5
3
6
10
3
9
7
8
01115

HOTSTART ASSEMBLY OPTION

Item	Part No.	Qty	Description	Notes
1	15396	1	Fitting, 90° - .375MNPT x .375FNPT, brass	
2	25931	1	Fitting, strt - .375NPT x .625 barb	
3	60365	4	Clamp, hose - SAE 010 (.56-1.06)	
4	50201	1.5 ft	Hose, .625, 200 psi, class A	
5	60479	2	Screw, .250-20 x 1.0 sflg hex, G5	
6	25914	1	Heater, coolant	
7	60018	2	Screw, M10-1.50 x 20 sflg hex, class 90	
8	60161	2	Nut, .250-20 sflg, G5	
9	37958B	1	Weldment, hotstart bracket	
10	50201	1.33 ft	Hose, .625, 200 psi, class A	
11	25917	1	Fitting, strt - .250NPT x .625 barb	
12	33894	1	Fitting, 45° - .250MNPT x .250FNPT	
--	68333	1	Cordgrip, .230-.395 cord, .750 hole - snap-in	
--	68334	1	O-ring, .612 ID x .103 TH, size 114	
--	68336	1	Wire group - 500W heater	
--	37870	1	Assembly, kim hotstart	

ENGINE MOUNT ASSEMBLY

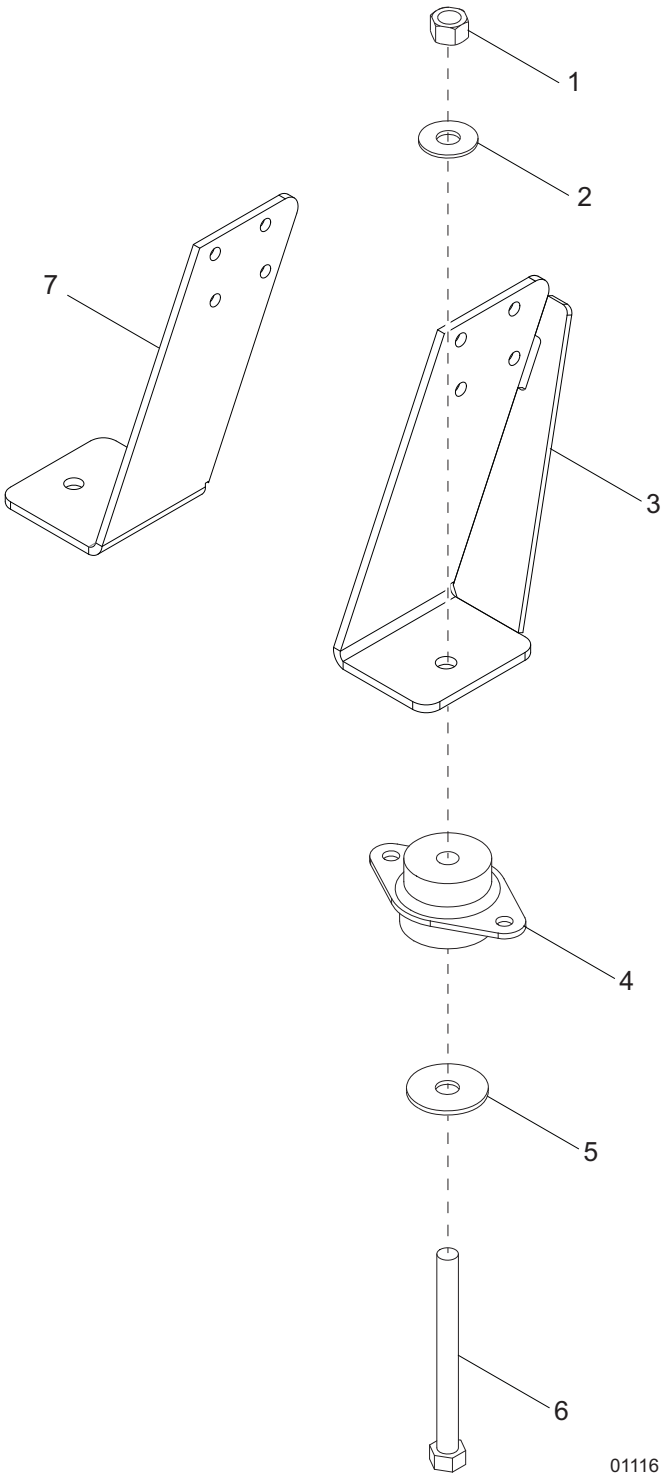

ENGINE MOUNT ASSEMBLY

Item	Part No.	Qty	Description	Notes
1	62221	2	Nut, .500-13 nylock, G5	
2	60416	2	Washer, .500 flat 1.375/.090	
3	33648B	1	Weldment, engine mount - left	
4	22788	2	Isolator, rubber - 350 lbs	
5	18085	2	Washer, .510 snubber 2.0/.130	
6	61094	2	Screw, .500-13 x 3.50 std hex, G8	
7	33647B	1	Weldment, engine mount - right	

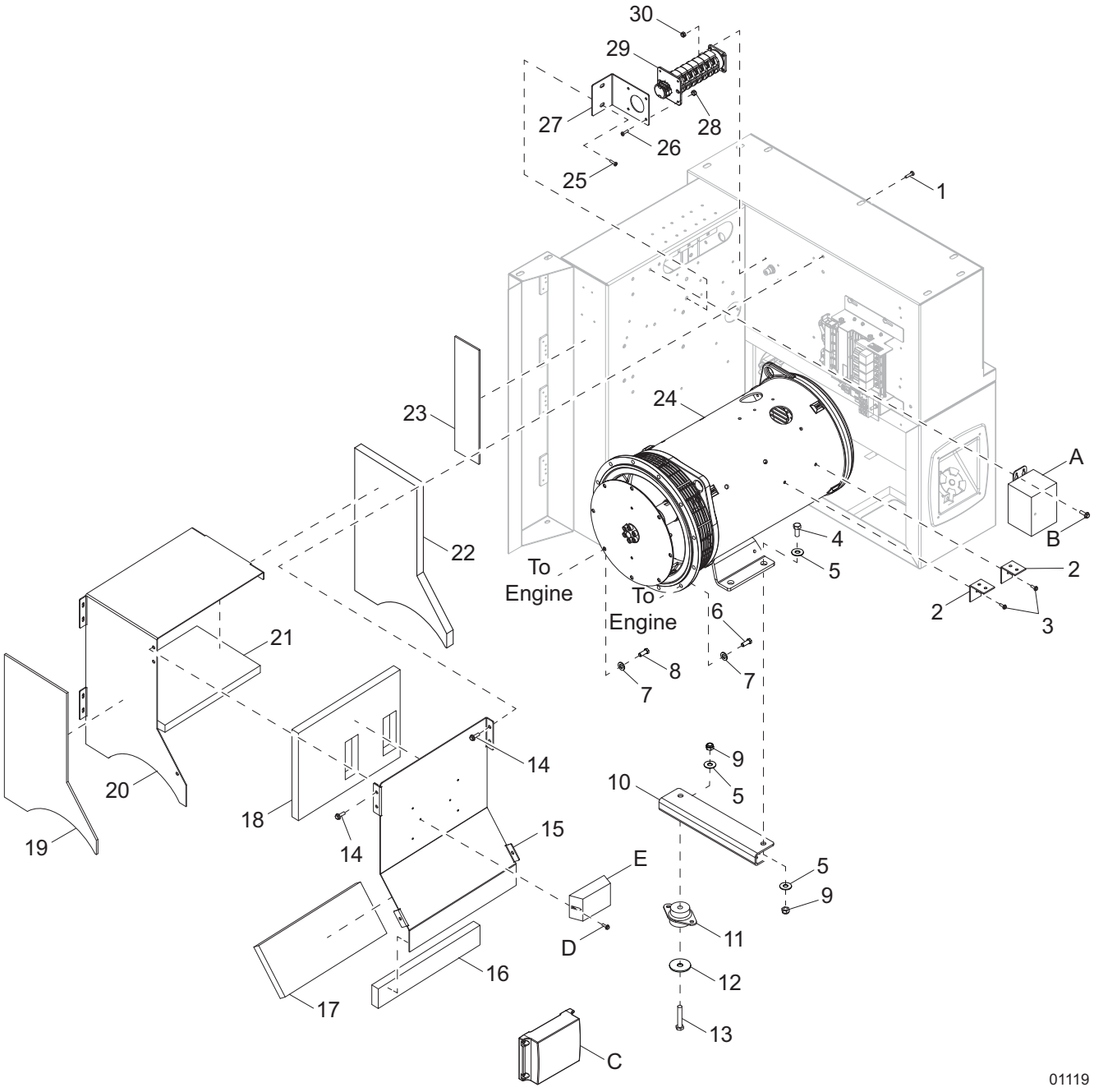
30
29
27
28
26
25
1
23
24
A
B
4
5
2
2
3
22
To Engine
To Engine
6
21
8
7
7
14
9
5
10
20
18
15
19
14
E
5
9
11
D
16
12
17
13
C
01119

GENERATOR ASSEMBLY

Item	Part No.	Qty	Description	Notes
1	60046	4	Screw, 6-32 x .750 pan phil, G2	
2	37819B	2	Bracket, harness mounting	
3	60115	2	Screw, M6-1.0 x 12 sflg hex, G8.8	
4	61101	2	Screw, .500-13 x 1.50 std hex, G8	
5	60416	6	Washer, .500 flat 1.375/.090	
6	60055	12	Screw, M10-1.50 x 35 std hex, G10.9	
7	60026	20	Washer, M10 split lock	
8	63338	8	Screw, M10-1.50 x 20 hex, G10.9	
9	62221	4	Nut, .500-13 nylock, G5	
10	36899B	1	Bracket, generator mount adapter	
11	22788	2	Isolator, rubber - 350 lbs	
12	18085	2	Washer, .510 snubber 2.0/.130	
13	61094	2	Screw, .500-13 x 3.50 std hex, G8	
14	60175	12	Screw, .250-20 x .500 sflg hex, G5	
15	37566W	1	Panel, generator cover - front	
16	37674	1	Foam, generator box - front bottom	
17	37673	1	Foam, generator box - front middle	
18	37672	1	Foam, generator box - front top	
19	37814	1	Foam, generator box - ceramic	
20	35390W	1	Panel, generator cover - side-top	
21	37676	1	Foam, generator box - top	
22	37675	1	Foam, generator box - side	
23	37815	1	Foam, AC box - ceramic	
24	37018	1	Generator, Marathon, 285PSL1700, SAE #4	
25	60616	2	Screw, .312-18 x .750 sflg hex, G5	
26	60277	4	Screw, 10-32 x .500 pan phil, G2	
27	35391W	1	Bracket, phase switch	
28	60061	4	Nut, 10-32 nylock	
29	37193	1	Switch, phase - 80A, 3 position (Y,y,Z)	
30	60728	4	Nut, 6-32 nylock, G5	
--	68162	1	Wire group - AC, 3 position	
--	37567	1	Assembly, generator cover	Items 15 & 20
--	65519	1	Block, terminal - 4 pole, stud type	
--	28628B	1	Plate, terminal block mounting	
--	37196	1	Assembly, generator	
OPTIONAL FEATURES				
Buck Transformer:				
A	21487	1	Transformer, 1.13:1 1-phase, 500VA (std buck)	
B	60528	3	Screw, .250-20 x .625 sflg hex, G5	
--	68193	1	Wire group - buck transformer	
Battery Chargers:				
C	66212	1	Charger, battery - 2 - 5A/1 - 10A, 3 stage, 2 output	
D	60419	2 or 4	Screw, 6-32 x .500 flg hex, G2, self-tapping w/slot	Use qty 2 for item E & qty 4 for item C
E	65326	1	Charger, battery - 2A, 3 stage, 1 output	
4 Position Phase Switch:				
--	37194	1	Switch, phase - 80A, 4 position (Y,y,D,Z)	
--	68163	1	Wire group - AC, 4 position	
4 Position Phase Switch - 600V:				
--	37144	1	Wire group - 80A, 4 position (600Y,Y,y,Z)	
--	68164	1	Wire group - AC, 4 position 600V	

SKID ASSEMBLY

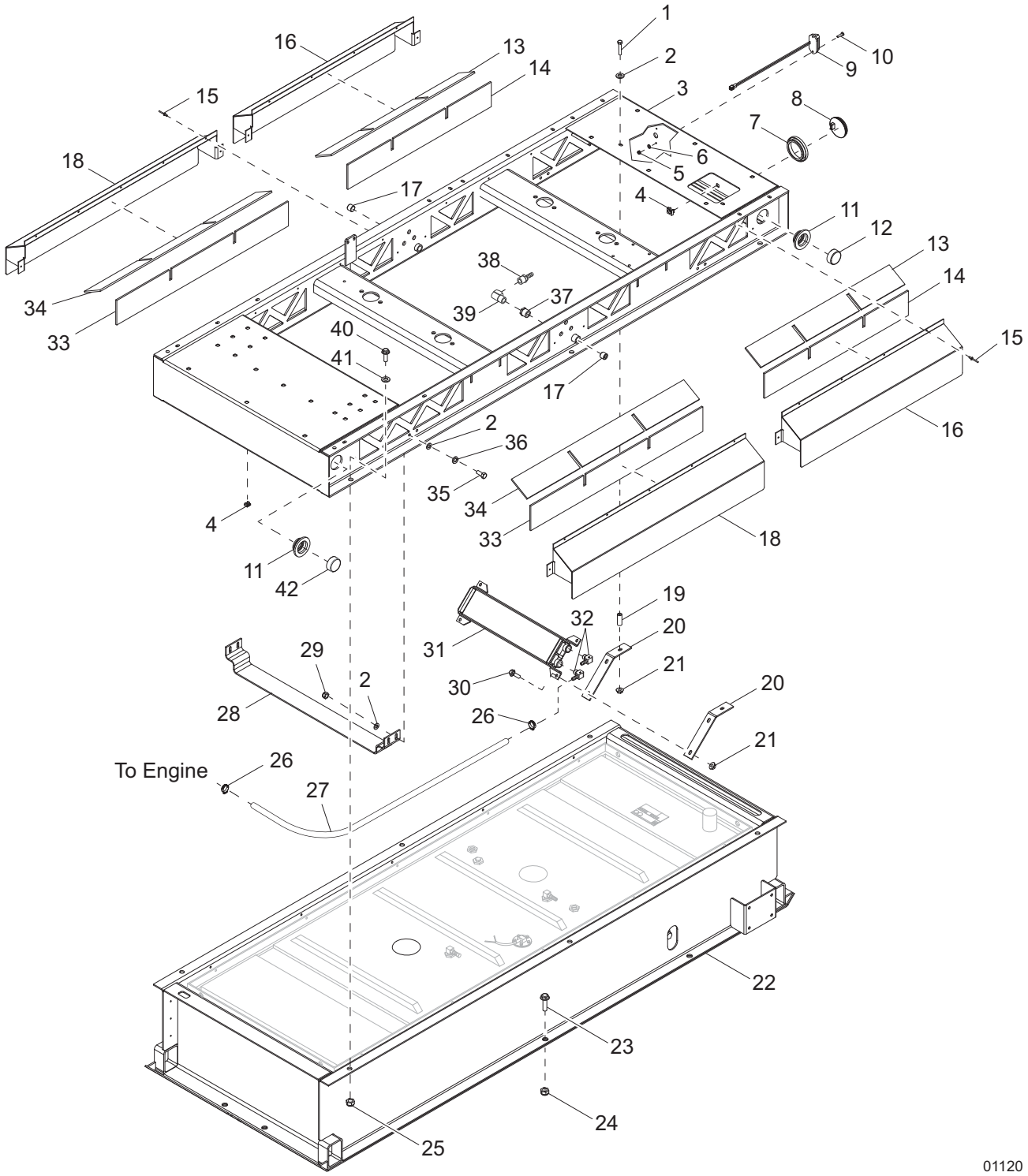

SKID ASSEMBLY

Item	Part No.	Qty	Description	Notes
1	63318	2	Screw, .312-18 x 3.0 std hex, SS	
2	60340	18	Washer, .312 flat .875/.040, SS	
3	36925B	1	Weldment, mini skid	
4	15425	13	Nut, .312-18 cage	
5	60270	2	Nut, 8-32 nylock, class 6	
6	60269	2	Washer, #8 flat .433/.036	
7	10221	2	Grommet, rear light, rubber - 4.5 in	
8	66701	2	Light, rear tail/turn, round 4 in. - no grommet	
9	36963	1	Assembly, license plate light	
10	60694	2	Screw, 8-32 x .750 pan phil, SS	
11	66394	4	Grommet, sealed beam light, rubber - 2.0 in	
12	66703	2	Light, clearance, no grommet, 2.0 in. - red LED	
13	37663	2	Foam, rain shield - small top	
14	37662	2	Foam, rain shield - small bottom	
15	60260	26	Rivet, .188 dia. x .375 to .500 grip, SS	
16	37492B	2	Weldment, rain shield - short	
17	18394	2	Fitting, plug - .500NPT x internal hex	
18	36984B	2	Weldment, rain shield - long	
19	30558B	2	Spacer, .750 OD, .51 ID, 2.0 long	
20	36386B	2	Bracket, fuel cooler	
21	60095	6	Nut, .312-18 sflg	
22	36921B	1	Weldment, lower skid	
23	63111	6	Screw, .750-10 x 2.250 flg hex, G8	
24	60584	6	Nut, .750-10 nylock, G5	
25	60240	6	Nut, .625-11 nylock, G5	
26	19453	2	Clamp, hose - SAE 006 (.37-.87)	
27	50051	5 ft	Hose, fuel - .375 ID, 50 psi, SAE 30R7	
28	36985B	2	Bracket, fuel tank tie down	
29	60303	8	Nut, .312-18 nylock, G2	
30	60616	4	Screw, .312-18 x .750 sflg hex, G5	
31	33700	1	Cooler, fuel	
32	62145	2	Fitting, 90° - .375MNPT x .375 barb, brass	
33	37665	2	Foam, rain shield - large bottom	
34	37666	2	Foam, rain shield - large top	
35	60507	8	Screw, .312-18 x 1.0 std hex, SS	
36	60701	8	Washer, .312 split lock, SS	
37	22570	1	Fitting, strt - .500MNPT x .375FNPT	
38	19180	1	Fitting, strt - .375MNPT x .312 barb	
39	15396	1	Fitting, 90° - .375MNPT x .375FNPT, brass	
40	61069	6	Screw, .625-11 x 1.750 std hex, G5	
41	60193	6	Washer, M16 flat	
42	66702	2	Light, clearance, no grommet, 2.0 in. - amber LED	
--	67856	1	Harness, trailer extension assembly - 100 in	
--	68281	1	Harness, trailer lights - LED	

FUEL TANK ASSEMBLY

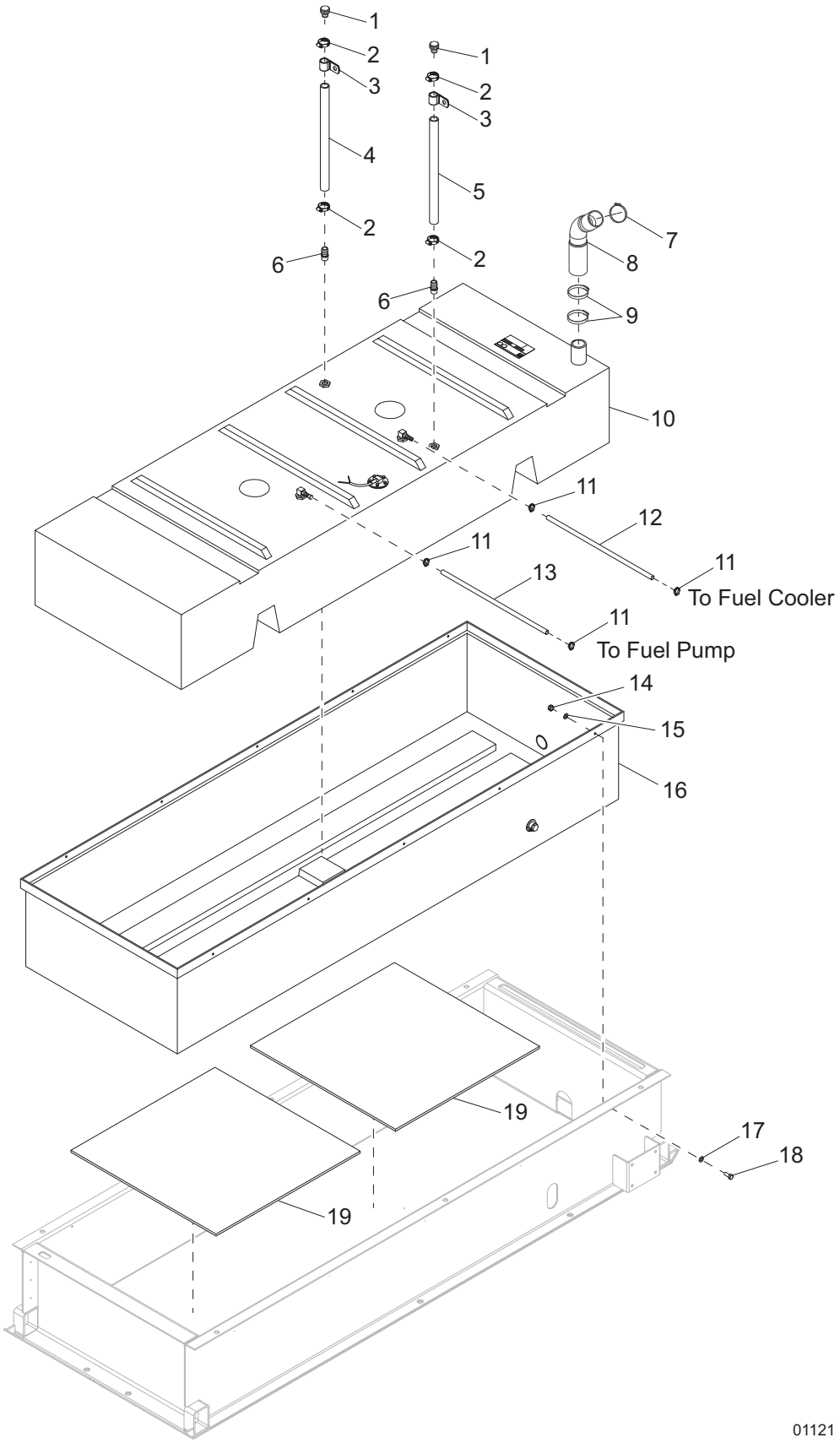

FUEL TANK ASSEMBLY

Item	Part No.	Qty	Description	Notes
1	26379	2	Vent, plastic fuel - 1.0 ID	
2	19338	4	Clamp, hose - SAE 016 (.68-1.50)	
3	60716	2	Clamp, tubing - 1.50 light duty	
4	50019	3 ft	Hose, fuel - 1.0, SAE 20R3	
5	50019	3 ft	Hose, fuel - 1.0, SAE 20R3	
6	25496	2	Fitting, strt - .750MNPT x 1.0 barb, brass	
7	19336	1	Clamp, hose - SAE 044 (2.31-3.25)	
8	37630	1	Hose, fuel fill	
9	18663	2	Clamp, hose - SAE 060 (3.31-4.25)	
10	37052	1	Tank, fuel - 100 gal. poly	
11	19453	4	Clamp, hose - SAE 006 (.37-.87)	
12	50051	2 ft	Hose, fuel - .375 ID, 50 psi, SAE 30R7	
13	50051	2.33 ft	Hose, fuel - .375 ID, 50 psi, SAE 30R7	
14	60144	10	Nut, .250-20 nylock, G5	
15	60243	10	Washer, .250 flat .735/.060	
16	37053	1	Pan, 24 hr containment, poly	
17	60696	10	Washer, .250 flat .625/.050, SS	
18	60620	10	Screw, .250-20 x 1.0 std hex, SS	
19	37564	2	Foam, neoprene, containment liner	
--	60479	2	Screw, .250-20 x 1.0 sflg hex, G5	To attach item 3
--	60161	2	Nut, .250-20 sflg, G5	To attach item 3

TRAILER ASSEMBLY - SINGLE AXLE

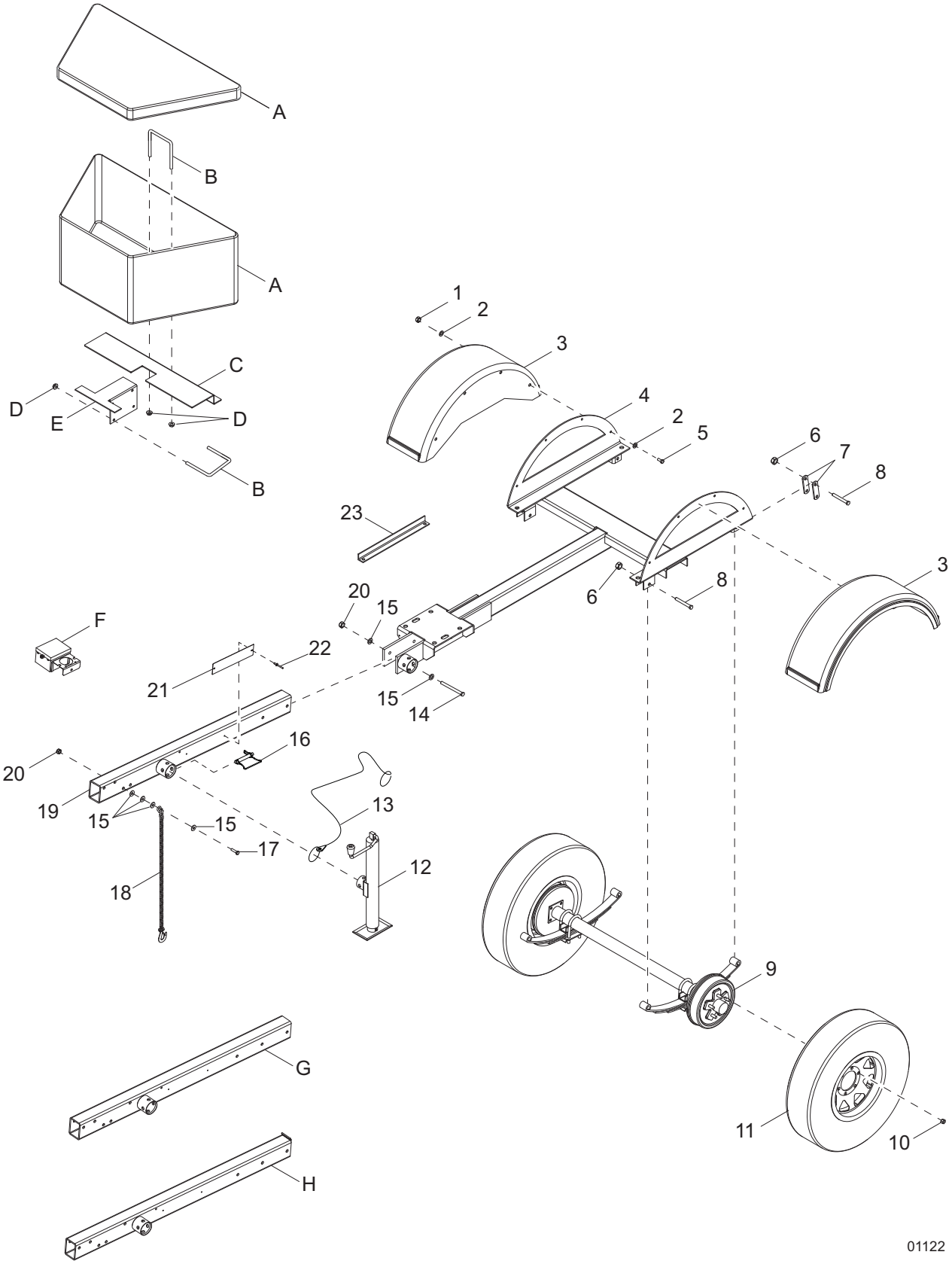

TRAILER ASSEMBLY - SINGLE AXLE

Item	Part No.	Qty	Description	Notes
1	60358	8	Nut, .375-16 nylock, G5	
2	60698	16	Washer, .375 flat .875/.040, SS	
3	11381	2	Fender, plastic - single, 14 in. tire	
4	37092B	1	Weldment, trailer chassis	
5	61036	8	Screw, .375-16 x 1.25 std hex, SS	
6	60504	6	Nut, .562-18 lock hex, G5	
7	19637	4	Plate, shackle bracket - 3.125 in	
8	60503	6	Screw, shackle - .562-18 x 3.0 std hex, G5	
9	*Page 60*	1	Assembly, axle	
10	60096	12	Nut, .500-20 lug, G5	
11	18377B	2	Wheel, ST225/75R15, 2540 lb	
12	23254	1	Jack, top wind - 2000 lb, tube mounted	
13	12647	1	Cable, tether - jack pin and ground rod cover	
14	61104	3	Screw, .500-13 x 5.50 std hex, G8	
15	60416	14	Washer, .500 flat 1.375/.090	
16	23256	1	Pin, jack - 2000 lb tube mounted	
17	60376	2	Screw, .500-13 x 4.50 std hex, G5	
18	23367	2	Chain, safety - 7800 lbs rated	
19	24812B	1	Weldment, tongue - non-adjustable	
20	62221	5	Nut, .500-13 nylock, G5	
21	30138	1	Plate, vin/trailer tag	
22	60231	2	Rivet, .188 dia. x .375 to .500 grip	
23	24691B	1	Brace, tongue shipping	
--	61103	1	Screw, .500-13 x 1.750 sflg hex, G8	To attach item 23
--	62221	1	Nut, .500-13 nylock, G5	To attach item 23
--	13051	1	Assembly, jack - 2000 lb top wind, tube mounted	Items 12, 13, & 16

OPTIONAL FEATURES

Toolbox:

A	32214	1	Toolbox, trailer front - 49 x 15 x 18.5 (L x W x H) poly
B	62021	2	Bolt, U - .375-16 x 4.0 x 4.625
C	37693B	1	Bracket, toolbox mount
D	60145	4	Nut, .375-16 sflg, G5
E	37694B	1	Bracket, toolbox mount

Electric Brakes:

F	19417	1	Breakaway kit
--	19438	1	Harness, wiring - electric brakes
--	65899	1	Harness, electric brake

Adjustable Hitch Tongues:

G	30931B	1	Weldment, tongue w/support plate - electric brake
H	35075B	1	Weldment, flip tongue - surge brake

TRAILER ASSEMBLY - TANDEM AXLE

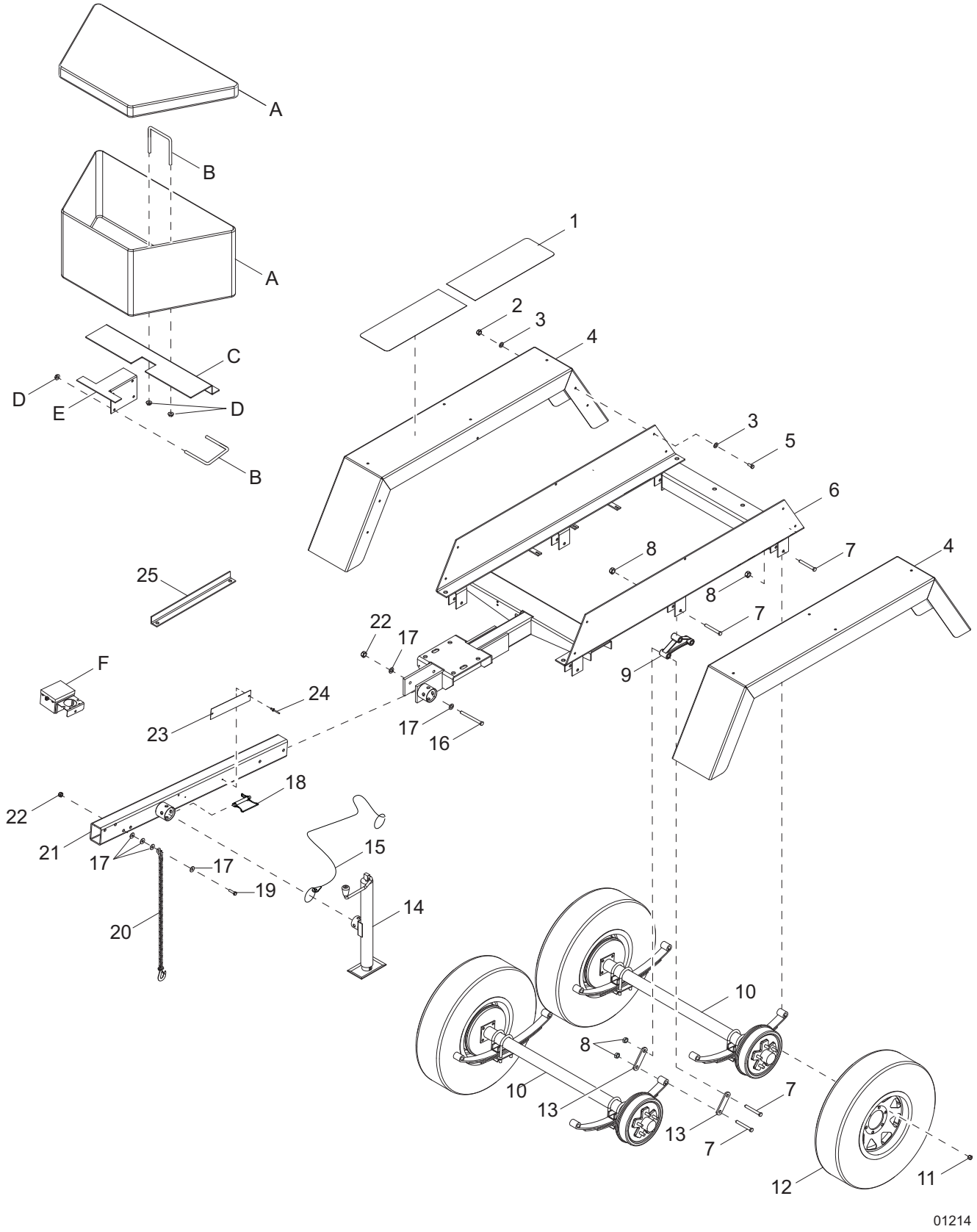

TRAILER ASSEMBLY - TANDEM AXLE

Item	Part No.	Qty	Description	Notes
1	22398	4	Pad, slip resistant - 10.0 x 28.0	
2	60358	10	Nut, .375-16 nylock, G5	
3	60698	20	Washer, .375 flat .875/.040, SS	
4	22976B	2	Weldment, fender tandem	
5	61036	10	Screw, .375-16 x 1.25 std hex, SS	
6	24789B	1	Weldment, flip tongue trailer - tandem	
7	60503	14	Screw, shackle, .562-18 x 3.0 std hex, G5	
8	60504	14	Nut, .562-18 lock, G5	
9	40545	2	Equalizer, tandem axle - 5.625 centers	
10	*Page 60*	2	Assembly, axle	
11	60096	20	Nut, .500-20 lug, G5	
12	15540	4	Wheel, ST205/75R15, 1598 lb - 6 pr	
13	19637	8	Plate, shackle bracket - 3.125 in	
14	23254	1	Jack, top wind - 2000 lb, tube mounted	
15	12647	1	Cable, tether - jack pin and ground rod cover	
16	61104	3	Screw, .500-13 x 5.50 std hex, G8	
17	60416	14	Washer, .500 flat 1.375/.090	
18	23256	1	Pin, jack - 2000 lb, tube mounted	
19	60376	2	Screw, .500-13 x 4.50 std hex, G5	
20	23367	2	Chain, safety - 7800 lbs rated	
21	30931B	1	Weldment, tongue w/support plate	
22	62221	5	Nut, .500-13 nylock, G5	
23	30138	1	Plate, vin/trailer tag	
24	60231	2	Rivet, .188 dia. x .375 to .500 grip	
25	24691B	1	Brace, tongue shipping	
--	61103	1	Screw, .500-13 x 1.750 sflg hex, G8	To attach item 25
--	62221	1	Nut, .500-13 nylock, G5	To attach item 25
--	13051	1	Assembly, jack - 2000 lb top wind, tube mounted	Items 14, 15, & 18

OPTIONAL FEATURES

Toolbox:

A	32214	1	Toolbox, trailer front - 49 x 15 x 18.5 (L x W x H) poly
B	62021	2	Bolt, U - .375-16 x 4.0 x 4.625
C	37693B	1	Bracket, toolbox mount
D	60145	4	Nut, .375-16 sflg, G5
E	37694B	1	Bracket, toolbox mount

Electric Brakes:

F	19417	1	Breakaway kit
--	65821	1	Harness, electric brake

AXLE ASSEMBLY

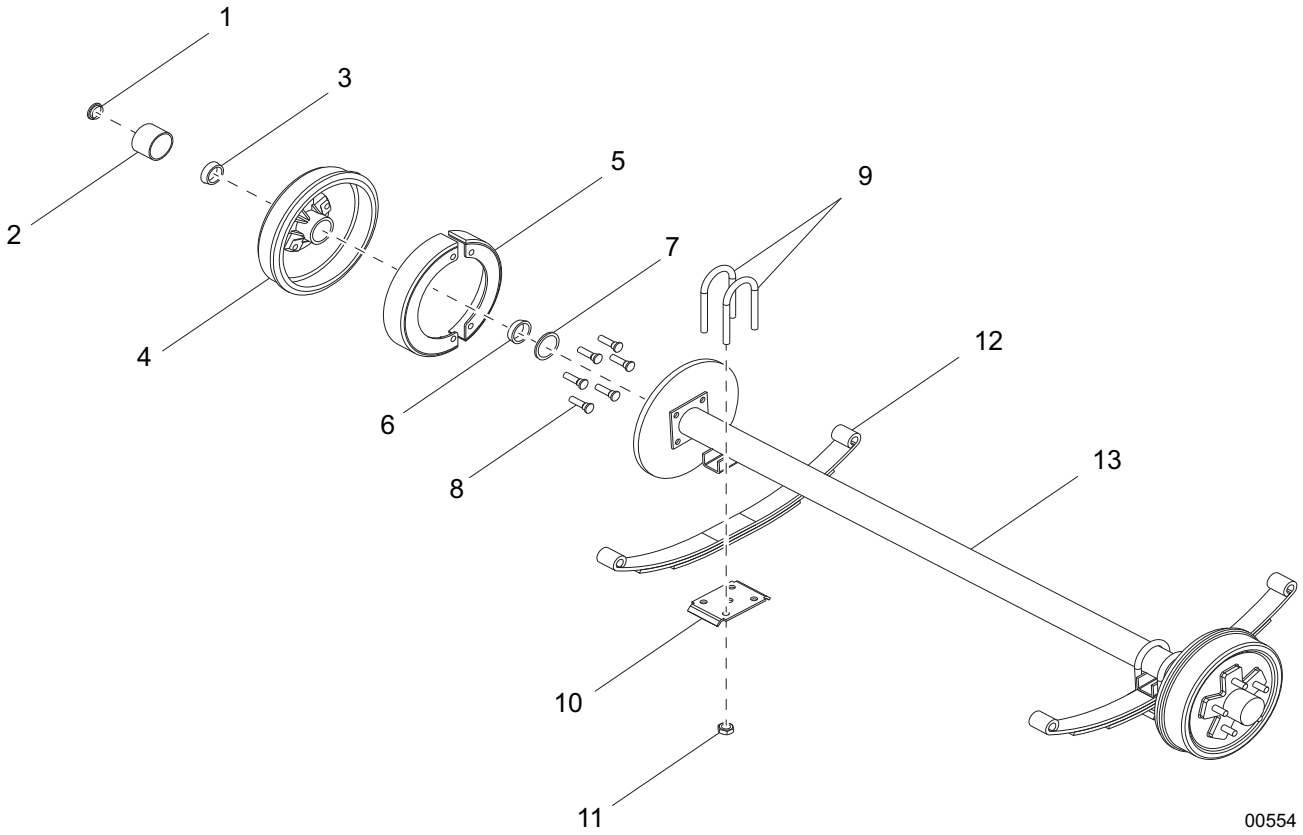

AXLE ASSEMBLY

Item	Part No.	Qty	Description	Notes
1	11254	2	Plug, grease cap - zerk	
2	23170	2	Cap, grease	
3	24831	2	Roller bearing - outer	
4	26452	2	Assembly, brake drum - 12 in. 6 holes on 5.5 in	
5	26571	1	Assembly, surge free-backing brake - LH	
	26572	1	Assembly, surge free-backing brake - RH	
6	24830	2	Roller bearing - inner	
7	24832	2	Bearing seal - 5000 lb	
8	60963	12	Stud, .500-20 wheel - 5000 lb	
9	40875	4	U-bolt	
10	40874	2	Tie plate	
11	26441	8	Nut, .500-20 U-bolt - plated	
12	23912	2	Spring, axle - 5000 lb	
13	22877	1	Axle, hydraulic - 5000 lb	
OPTIONAL FEATURES				
Electric Brake:				
--	22876	1	Axle, electric - 5000 lb	
--	26573	1	Assembly, electric brake - LH	
--	26575	1	Assembly, electric brake - RH	
Tandem Axle:				
--	11253	4	Cap, grease w/rubber plug - 3500 lb	
--	40956	4	Outer bearing	
--	12311	4	Brake drum - 10 in. 5 on 4.5 in	
--	40954	4	Inner bearing	
--	12307	4	Bearing seal - 3500 lb	
--	60674	20	Stud, wheel - .500-20, G8	
--	11277	8	U-bolt - 3500 lb	
--	11278	4	Tie plate - 3500 lb	
--	11203	16	Nut, U-bolt	
--	26665	4	Spring - 27 in., 3500 lb	
Tandem Axle - Surge Brake:				
--	19421	2	Axle, hydraulic - 3500 lb	
--	40764	2	Assembly, 10 in., surge brake - LH	
--	40765	2	Assembly, 10 in., surge brake - RH	
Tandem Axle - Electric Brake:				
--	19422	2	Axle, electric - 3500 lb	
--	26442	2	Assembly, 10 in., electric brake - LH	
--	26443	2	Assembly, 10 in., electric brake - RH	

TRAILER BRAKE LINES - SINGLE AXLE

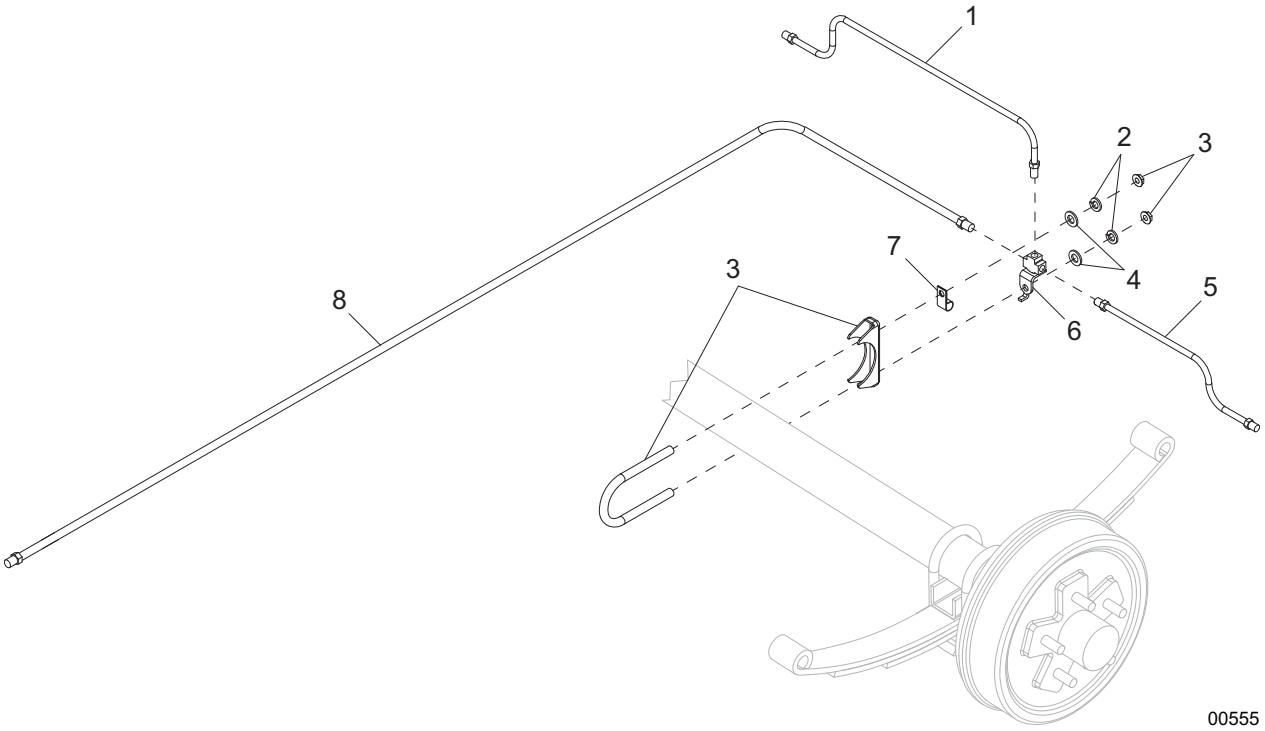

TRAILER BRAKE LINES - SINGLE AXLE

Item	Part No.	Qty	Description	Notes
1	23169	1	Line, brake - .188 x 12.0	
2	60341	2	Washer, M8 split lock, SS	
3	61064	1	Clamp, muffler - 3.0 light duty	
4	60166	2	Washer, M8 flat	
5	40494	1	Line, brake - .188 x 30.0	
6	19252	1	Fitting, strt - .188 brake line T w/bracket, all female	
7	61010	1	Clamp, tubing - .375 heavy duty, .375 bolt	
8	24688	1	Hose, brake - .188 x 136.0, male/male	
--	60231	6	Rivet, .188 dia. x .375 to .500 grip	
--	15626	6	Clamp, tubing - .375 light duty	
--	22340	1	Fitting, bushing - 1.0 OD x .750 ID	

TRAILER BRAKE LINES - TANDEM AXLE

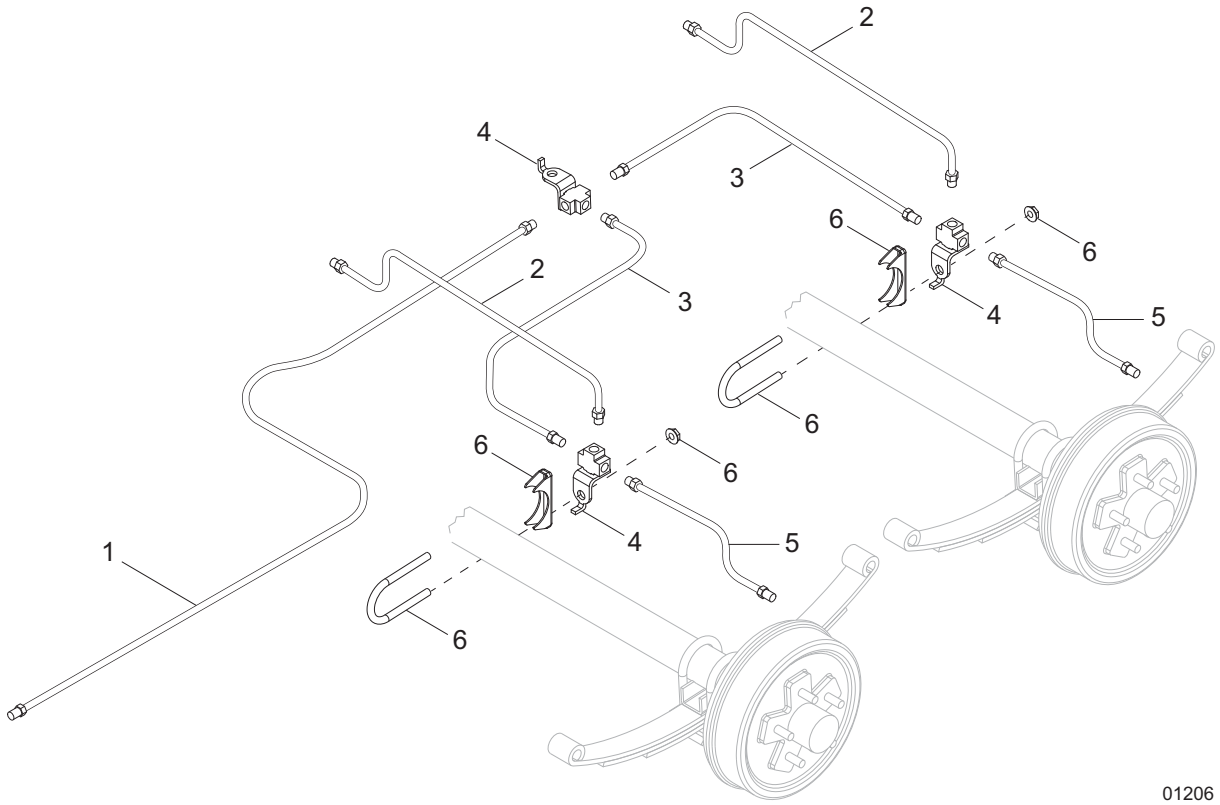

TRAILER BRAKE LINES - TANDEM AXLE

Item	Part No.	Qty	Description	Notes
1	24688	1	Hose, brake - .188 x 136.0, male/male	
2	40495	2	Line, brake - .188 x 20.0	
3	40817	2	Hose, brake - .188 x 33.0, male/male	
4	19252	3	Fitting, strt - .188 brake line T w/bracket, all female	
5	40494	2	Line, brake - .188 x 30.0	
6	61028	2	Clamp, muffler - 2.50 light duty	
--	22340	4	Fitting, bushing - 1.0 OD x .750 ID	
--	15626	5	Clamp, tubing - .375 light duty	
--	60231	3	Rivet, .188 dia. x .375 to .500 grip	
--	60684	2	Screw, .250-20 x .875 std hex, SS	
--	60166	2	Washer, M8 flat	
--	60144	2	Nut, .250-20 nylock, G5	

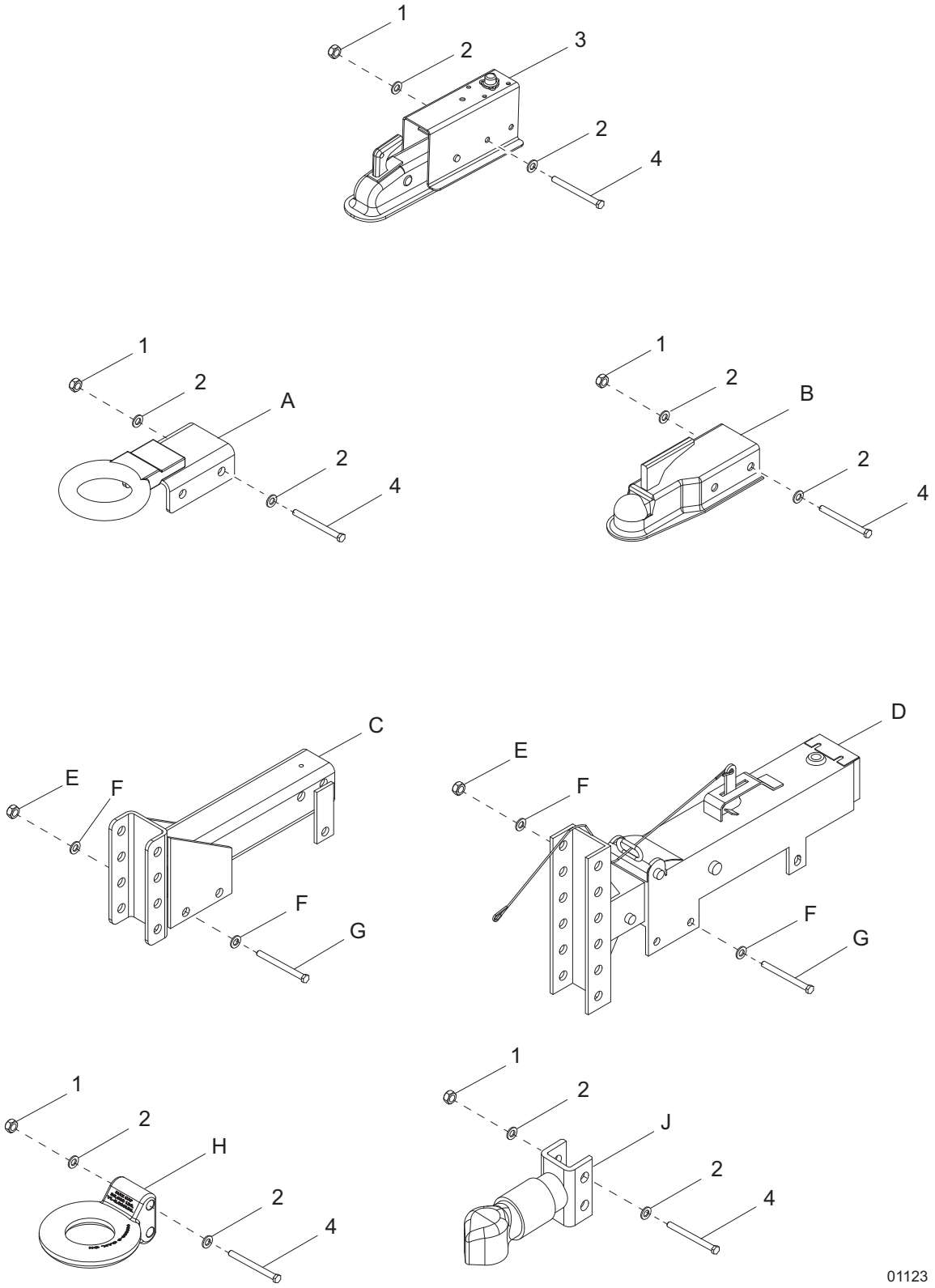
1
2
3
2
4
1
2
A
2
4
1
2
B
2
4
C
E
F
F
G
D
E
F
F
G
1
2
H
2
4
1
2
J
2
4
01123

TRAILER HITCH OPTIONS

Item	Part No.	Qty	Description	Notes
1	62221	2	Nut, .500-13 nylock, G5	
2	60309	4	Washer, .500 flat 1.060/.090	
3	24304	1	Actuator, hydraulic surge brake - 2 in. ball, 6000 lb	
4	61099	2	Screw, .500-13 x 5.0 std hex, G8	
--	41762	1	O-ring - 24 mm	
OPTIONAL FEATURES				
Non-Adjustable Electric Brake Hitches:				
A	11032B	1	Weldment, lunette ring - 3.0 ID	
B	23162	1	Coupler, 2.0 ball/3.0 channel - 5000 lb	
Adjustable Hitches:				
C	19379B	1	Weldment, hitch - 4 position, electric brake	
D	40529	1	Actuator, hydraulic surge brake - 7500 lb, surge brake	
E	62221	3	Nut, .500-13 nylock, G5	
F	60309	6	Washer, .500 flat 1.060/.090	
G	61099	3	Screw, .500-13 x 5.0 std hex, G8	
H	19335B	1	Coupler, lunette ring - 3.0 ID	Requires item C or D
J	19518	1	Coupler, 2.0 ball	Requires item C or D
Adapters - Electric Brake:				
--	65593	1	Adapter, trailer - 4 pin and 2 pin to 6 pin	
--	65583	1	Adapter, trailer - round 6 pin to round 7 spade	Requires 65593
Adapters - Surge Brake:				
--	65463	1	Adapter, trailer - flat 4 pin to round 6 pin	
--	65464	1	Adapter, trailer - flat 4 pin to round 7 pin	
--	65465	1	Adapter, trailer - flat 4 pin to round 7 spade	

RECOMMENDED SPARE PARTS LIST

ENGINE

Alternator 36661
Belt, fan 36659
Cap, overflow jug 19714
Cap, radiator 19219
Element, air filter 35962
Element, fuel filter - final 36904
Element, fuel filter - primary 36905
Fan, engine 33779
Filter, oil 36906
Hose, radiator - lower 36830
Hose, radiator - upper 36831
Jug, overflow 24952
Starter 36222

ELECTRICAL

Breaker, 225A 65452
Breaker, 240V/20A, 1-pole 18091
Breaker, 240V/50A, 2-pole 18092
Controller, programmed 68135
Fuse, 15A 68204
Fuse, 20A 35560
Fuse, 50A 65211-30
Receptacle, 120V/20A GFI 14130
Receptacle, 240V/50A twist lock 18089
Regulator, voltage - PM600 68015
Relay, 12V 30/50A - NO w/diode 68106
Sender, fuel 36243
Sensor, low coolant 68206
Switch, E-stop assembly 34989
Switch, phase - 80A, 3 position (Y,y,Z) 37193
Switch, rocker 66995
Switch, trigger safety - NO terminals 66089

MAINTENANCE KITS

Service kit - 250 hr SK322
Service kit - 2000 hr SK323

TRAILER

Jack, top wind (tongue) 13051

NOTES

NOTES