GENERAC®

Owner's Manual
For
Automatic Transfer Switch

100 - 200 Amp, Service Entrance/Non-Service Entrance

Model Numbers
RTSW100A3
RTSC100A3
RTSW150A3
RTSW200A3
RTSC200A3

MODEL NUMBER: _____

SERIAL NUMBER: _____

DATE PURCHASED:_____

WWW.GENERAC.COM
888-436-3722

Para español , visita: http://www.generac.com/service-support/product-support-lookup

Pour le français, visiter : http://www.generac.com/service-support/product-support-lookup

SAVE THIS MANUAL FOR FUTURE REFERENCE

WARNING

California Proposition 65. This product contains or emits chemicals known to the state of California to cause cancer, birth defects, and other reproductive harm. (000005)

Table of Contents

Section 1 Safety

1.1 General 1

1.2 General Hazards 1

Section 2 General Information

2.1 Introduction 3

2.2 Unpacking 3

2.3 Equipment Description 3

2.3.1 Transfer Switch Mechanism 3

2.3.2 Utility Service Circuit Breaker (if equipped) 4

2.4 Transfer Switch Data Decal 4

2.5 Transfer Switch Enclosure 4

2.6 Safe Use of Transfer Switch 4

2.7 Load Management Options 4

2.7.1 Smart A/C Module 4

2.7.2 Smart Management Module (Optional) 5

2.7.3 Load Management Analysis 5

Section 3 Installation

3.1 Introduction to Installation 7

3.2 Mounting 7

3.3 Connecting Power Source and Load Lines .7

3.4 Connecting Start Circuit Wires 7

3.5 Connecting Smart A/C Module 8

3.5.1 Control of Air Conditioner Load 8

3.6 Auxiliary Contacts 9

Section 4 Operation

4.1 Functional Tests and Adjustments 11

4.2 Manual Operation 11

4.2.1 Close to Utility Source Side 11

4.2.2 Close to Generator Source Side 11

4.2.3 Return to Utility Source Side 12

4.3 Voltage Checks 12

4.3.1 Utility Voltage Checks 12

4.3.2 Generator Voltage Checks 12

4.4 Generator Tests Under Load 12

4.5 Checking Automatic Operation 13

4.6 Installation Summary 13

4.7 Shutting Generator Down While Under Load 13

4.8 Testing The Smart A/C Module 13

4.9 Testing The Smart Management Module .. 14

Section 5 Drawings and Diagrams

5.1 Installation Drawing 15

5.1.1 No. 0G6832-A 100A SE & non-SE/150-200A non-SE 15

5.1.2 No. 0K2422-A 150/200A SE 16

5.2 Interconnection Drawing 18

5.2.1 No. 0L3240-A (Part 1 of 4) Liquid-cooled Generator 18

5.2.2 No. 0L3240-A (Part 2 of 4) Liquid-cooled Generator 19

5.2.3 No. 0L3240-A (Part 3 of 4) Air-cooled Generator 20

5.2.4 No. 0L3240-A (Part 4 of 4) Air-cooled Generator 21

This page intentionally left blank.

Section 1 Safety

1.1 — General

Read the following information carefully before attempting to install, operate or service this equipment. Also read the instructions and information on tags, decals, and labels that may be affixed to the transfer switch. Replace any decal or label that is no longer legible.

WARNING

Consult Manual. Read and understand manual completely before using product. Failure to completely understand manual and product could result in death or serious injury. (000100a)

The manufacturer cannot anticipate every possible circumstance that might involve a hazard. The warnings in this manual, and on tags and decals affixed to the unit are not all-inclusive. If using a procedure, work method or operating technique the manufacturer does not specifically recommend, ensure that it is safe. Also make sure the procedure, work method or operating technique used does not render the transfer switch unsafe.

Throughout this publication, and on tags and decals affixed to the generator, DANGER, WARNING, CAUTION and NOTE blocks are used to alert personnel to special instructions about a particular operation that may be hazardous if performed incorrectly or carelessly. Observe them carefully. Their definitions are as follows:

DANGER

Indicates a hazardous situation which, if not avoided, will result in death or serious injury.

(000001)

WARNING

Indicates a hazardous situation which, if not avoided, could result in death or serious injury.

(000002)

CAUTION

Indicates a hazardous situation which, if not avoided, could result in minor or moderate injury.

(000003)

NOTE:

Notes contain additional information important to a procedure and will be found within the regular text of this manual.

These safety warnings cannot eliminate the hazards that they indicate. Common sense and strict compliance with the special instructions while performing the action or service are essential to preventing accidents.

1.2 — General Hazards

- Any AC generator that is used for backup power if a NORMAL (UTILITY) power source failure occurs, must be isolated from the NORMAL (UTILITY) power source by means of an approved transfer switch. Failure to properly isolate the NORMAL and STANDBY power sources from each other may result in injury or death to electric utility workers, due to backfeed of electrical energy.
- Improper or unauthorized installation, operation, service or repair of the equipment is extremely dangerous and may result in death, serious personal injury, or damage to equipment and/or personal property.
- Extremely high power and dangerous voltages are present inside an installed transfer switch. Any contact with high voltage terminals, contacts or wires can result in LETHAL electric shock, while arc flash can cause blindness and severe burns. DO NOT WORK ON THE TRANSFER SWITCH UNTIL ALL POWER SUPPLIES TO THE SWITCH HAVE BEEN POSITIVELY TURNED OFF.
- Competent, qualified personnel should install, operate and service this equipment. Adhere strictly to local, state and national electrical and building codes. When using this equipment, comply with regulations the National Electrical Code (NEC), CSA Standard; C22.1 Canadian Electric Code and Occupational Safety and Health Administration (OSHA) have established.
- Never handle any kind of electrical device while standing in water, while barefoot, or while hands or feet are wet. DANGEROUS ELECTRICAL SHOCK MAY RESULT.
- Because jewelry conducts electricity, wearing it may cause dangerous electrical shock. Remove all jewelry (such as rings, watches, bracelets, etc.) before working on this equipment.
- If working on this equipment while standing on metal or concrete, place insulative mats over a dry wood platform. Work on this equipment only while standing on such insulative mats.
- Never work on this equipment while physically or mentally fatigued.

- Keep the transfer switch enclosure door closed and bolted at all times. Only qualified personnel should be permitted access to the switch interior.
- In case of an accident caused by electric shock, immediately shut down the source of electrical power. If this is not possible, attempt to free the victim from the live conductor but AVOID DIRECT CONTACT WITH THE VICTIM. Use a nonconducting implement, such as a dry rope or board, to free the victim from the live conductor. If the victim is unconscious, apply first aid and get immediate medical help.
- When an automatic transfer switch is installed for a standby generator set, the generator engine may crank and start at any time without warning. To avoid possible injury that might be caused by such sudden start-ups, the system's automatic start circuit must be disabled before working on or around the generator or transfer switch. Then place a "DO NOT OPERATE" tag on the transfer switch and on the generator.
- Any voltage measurements should be performed with a meter that meets UL3111 safety standards, and meets or exceeds overvoltage class CAT III.

Section 2 General Information

2.1 — Introduction

Thank you for purchasing a Generac transfer switch. This manual has been prepared especially for the purpose of familiarizing personnel with the design, application, installation, operation and servicing of the applicable equipment. Read this manual carefully and comply with all instructions. This will help to prevent accidents or damage to equipment that might otherwise be caused by carelessness, incorrect application, or improper procedures.

Every effort has been expended to make sure that the contents of this manual are both accurate and current. The manufacturer, however, reserves the right to change, alter or otherwise improve the product or manual at any time without prior notice.

2.2 — Unpacking

Carefully unpack the transfer switch. Inspect closely for any damage that might have occurred during shipment. The purchaser must file with the carrier any claims for loss or damage incurred while in transit.

Check that all packing material is completely removed from the switch prior to installation.

2.3 — Equipment Description

The automatic transfer switch is used for transferring electrical load from a UTILITY (NORMAL) power source to a GENERATOR (STANDBY) power source. Such a transfer of electrical loads occurs automatically when the UTILITY power source has failed or is substantially reduced and the GENERATOR source voltage and frequency have reached an acceptable level. The transfer switch prevents electrical feedback between two different power sources (such as the UTILITY and GENERATOR sources) and, for that reason, codes require it in all standby electric system installations.

The transfer switch consists of a transfer mechanism, utility service disconnect circuit breaker (if equipped), a control relay, a Smart A/C module, fuses, terminal strip, and fuse holder for connection of sensing wires.

This transfer switch is suitable for use as service equipment if equipped with utility service circuit breaker.

2.3.1— Transfer Switch Mechanism

These switches (Figure 2-1) are used with a single-phase system, when the single-phase NEUTRAL line is to be connected to a neutral lug and is not to be switched.

Solderless, screw-type terminal lugs are standard.

The conductor size range is as follows:

Switch Rating	Wire Range	Conductor Tightening Torque
100A	#14-1/0 AWG (Cu/Al)	50 **in-lbs** (5.6 Nm)
150/200A	#6-250 MCM (Cu/Al)	275 **in-lbs** (31 Nm)

This transfer switch is suitable for control of motors, electric discharge lamps, tungsten filament and electric heating equipment where the sum of motor full load ampere ratings and the ampere ratings of other loads do not exceed the ampere rating of the switch and the tungsten load does not exceed 30 percent of the switch rating.

This UL listed transfer switch is for use in optional standby systems only (NEC article 702).

A 100A rated switch is suitable for use on circuits capable of delivering not more than 10,000 RMS symmetrical amperes, 250 VAC maximum, when protected by a 100A maximum circuit breaker (Siemens types QP or BQ) or 150A maximum circuit breaker (Square D Q2, Westinghouse CA-CAH, General Electric TQ2 and Siemens QJ2).

A 200A rated switch is suitable for use on a circuit capable of 10,000 RMS symmetrical amperes, 240 VAC when protected by a circuit breaker without an adjustable short time response or by fuses.

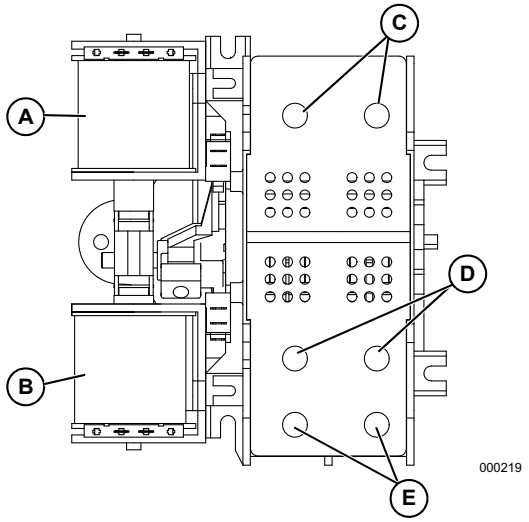

Figure 2-1. Typical Single-Phase ATS Transfer Mechanism

A	Utility Closing Coil
B	Generator Closing Coil
C	Utility Lugs (N1 & N2)
D	Generator Lugs (E1 & E2)
E	Load Lugs (T1 & T2)

2.3.2— Utility Service Circuit Breaker (if equipped)

The utility service and generator disconnect circuit breakers for 100 amp models are:

- Type BQ, 2-pole
- 120/240VAC, 100A
- 50/60 Hertz
- Wire range: #1 - #8 AWG (Cu/Al)
- The conductor tightening torque is 50 **in-lbs.** (5.6 Nm).

The utility service circuit breakers for 150/200 amp models are:

- Type 225AF, 2-pole
- 120/240VAC, 150A/200A
- 50/60 Hertz
- Wire range:
  – Line: 300 MCM - 6 STR (Cu/Al)
  – Load - ATS: 250 MCM - 6 STR (Cu/Al)
- The conductor tightening torque is:
  – Line: 375 **in-lbs** (42.4 Nm)
  – Load - ATS: 275 **in-lbs.** (31 Nm)

The utility service circuit breakers for Siemens 150/200 amp models are:

- Siemens, Type QN, 2-pole
- 120/240 VAC, 150/200A
- 50/60 Hertz
- Wire range:
  – Line: 300 MCM - 1 STR (Cu/Al)
  – Load - ATS: 250 MCM - 6 STR (Cu/Al)
- The conductor tightening torque is:
  – Line: 250 **in-lbs.** (28.2 Nm)
  – Load - ATS: 275 **in-lbs.** (31 Nm)

2.4 — Transfer Switch Data Decal

A data decal is permanently affixed to the transfer switch enclosure. Use this transfer switch only with the specific limits shown on the data decal and on other decals and labels that may be affixed to the switch. This will prevent damage to equipment and property.

When requesting information or ordering parts for this equipment, make sure to include all information from the data decal.

For future reference, record the Model and Serial numbers in the space provided on the front cover of this manual

2.5 — Transfer Switch Enclosure

The standard switch enclosure is a National Electrical Manufacturer's Association (NEMA) and UL 3R type. UL and NEMA 3R (indoor/outdoor rated) type enclosures primarily provide a degree of protection against falling rain and sleet; are undamaged by the formation of ice on the enclosure.

2.6 — Safe Use of Transfer Switch

⚠WARNING

Consult Manual. Read and understand manual completely before using product. Failure to completely understand manual and product could result in death or serious injury. (000100a)

Before installing, operating or servicing this equipment, read the SAFETY RULES carefully. Comply strictly with all SAFETY RULES to prevent accidents and/or damage to the equipment. The manufacturer recommends that a copy of the SAFETY RULES be posted near the transfer switch. Also, be sure to read all instructions and information found on tags, labels and decals affixed to the equipment.

Two publications that outline the safe use of transfer switches are the following:

- NFPA 70; National Electrical Code
- UL 1008, STANDARD FOR SAFETY-AUTOMATIC TRANSFER SWITCHES

NOTE: It is essential to use the latest version of any standard to ensure correct and current information.

2.7 — Load Management Options

Load management systems are designed to work together to prevent a generator from being overloaded by large appliance loads. A Smart A/C Module is standard in these switches. An optional Smart Management Module is also available.

2.7.1— Smart A/C Module

Up to four air conditioner loads can be managed by the Smart A/C Module. The Smart A/C Module manages the loads by "shedding" the connected loads in the event of a drop in generator frequency (overload). Loads to be "shed" are in 4 priority levels on the module.

Priorities A/C 1-4 (A in Figure 2-2) have connections for an air conditioner. To control an air conditioner, no additional equipment is required. Internal normally closed relays interrupt the 24 VAC thermostat control signal to disable the air conditioner load.

Four LEDs, located on the Smart A/C Module (B in Figure 2-2), illuminate when a load is connected and powered.

The Smart A/C Module has a test button used to simulate an overload condition. This button operates even when the transfer signal is inactive.

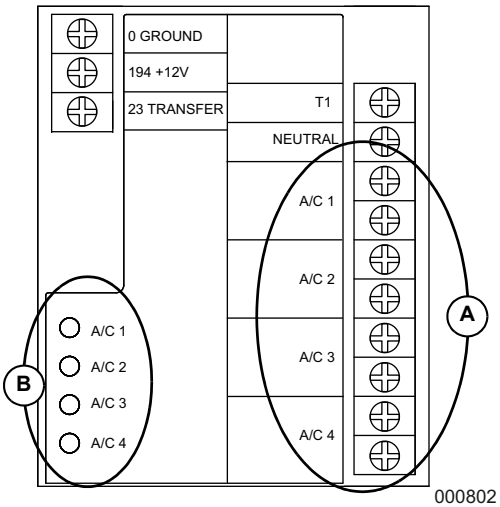

Figure 2-2. Smart A/C Module

2.7.2— Smart Management Module (Sold Separately))

Any loads, including central air conditioners, can be managed using a Smart Management Module (SMM). The system can accommodate up to eight individual SMM modules.

NOTE: The SMM modules are self-contained and have individual built-in controllers.

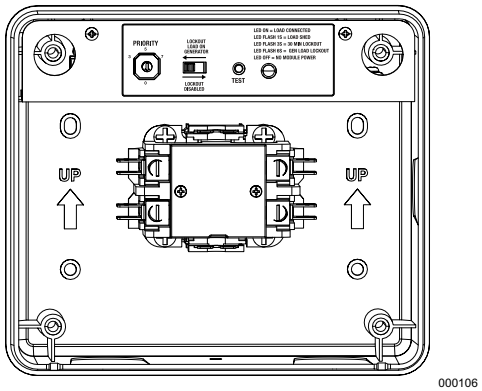

Figure 2-3. Smart Management Module

2.7.3— Application Considerations

Generator overload condition is determined by generator frequency. Loads are shed when frequency is less than 58 Hz for three seconds or less than 50 Hz for ½ second (for 60 Hz systems).

The Smart A/C Module can be used in conjunction with individual Smart Management Modules (SMM) to manage a combined total of eight loads.

- Use Priorities A/C 1-4 on the Smart A/C Module as the top priorities, then up to four Smart Management Modules as Priorities 5-8.
- Use only select A/C priorities on the Smart A/C Module as the top priorities, then use additional Smart Management Modules as the remaining priorities.
- A Smart Management Module can share a priority with an A/C priority on the Smart A/C Module provided the generator is sized to handle the combined surge load from both appliances. Sharing priorities can allow up to 12 loads to be managed in a properly sized system.

In any combination of modules, the recovery times after a loss of utility power or shutdown due to overload are shown in Table 1.

Table 1. Priority Settings

Priority	Recovery Time	Smart A/C Module	Smart Management Module
1	5 minutes	Yes	Yes
2	5 minutes 15 seconds	Yes	Yes
3	5 minutes 30 seconds	Yes	Yes
4	5 minutes 45 seconds	Yes	Yes
5	6 minutes	NA	Yes
6	6 minutes 15 seconds	NA	Yes
7	6 minutes 30 seconds	NA	Yes
8	6 minutes 45 seconds	NA	Yes

Refer to the SMM Owner's/Installation Manual for detailed characteristics and specifications of that product.

This page intentionally left blank.

Section 3 Installation

3.1 — Introduction to Installation

This equipment has been wired and tested at the factory. Installing the switch includes the following procedures:

- Mounting the enclosure.
- Connecting power source and load leads.
- Connecting the generator start and sensing circuit.
- Connecting any auxiliary contact (if needed).
- Testing functions.

3.2 — Mounting

Mounting dimensions for the transfer switch enclosure are in this manual. Enclosures are typically wall-mounted. See the “Installation Diagram” section.

DANGER

Equipment malfunction. Installing a dirty or damaged transfer switch will cause equipment malfunction and will result in death or serious injury. (000119)

This transfer switch is mounted in a UL type 3R enclosure. It can be mounted outside or inside and should be based on the layout of installation, convenience and proximity to the utility supply and load center.

Install the transfer switch as close as possible to the electrical loads that are to be connected to it. Mount the switch vertically to a rigid supporting structure. To prevent switch distortion, level all mounting points. If necessary, use washers behind mounting holes to level the unit.

3.3 — Connecting Power Source and Load Lines

DANGER

Electrocution. Turn utility and emergency power supplies to OFF before connecting power source and load lines. Failure to do so will result in death or serious injury. (000116)

Installation and interconnection diagrams are provided in this manual.

NOTE: All installations must comply with national, state and local codes. It is the responsibility of the installer to perform an installation that will pass the final electrical inspection.

The utility supply connection is made at the utility service disconnect circuit breaker terminals. The generator and customer load connections are made at the transfer switch mechanism, inside the switch enclosure.

Conductor sizes must be adequate to handle the maximum current to which they will be subjected, based on the 75°C column of tables, charts, etc. used to size conductors. The installation must comply fully with all applicable codes, standards and regulations.

All power cables can enter the enclosure through the knockouts provided. If not using the knockouts, conduit entry into the enclosure above the level of uninsulated live parts shall use fittings listed for use in wet locations to maintain the Type 3R rating. Conduits should be arranged to provide separation between the Utility and Generator supply conductors inside the enclosure.

NOTE: If aluminum conductors are used, apply corrosion inhibitor to conductors. After tightening terminal lugs, carefully wipe away any excess corrosion inhibitor.

Tighten terminal lugs to the torque values as noted on the decal located on the inside of the door. After tightening terminal lugs, carefully wipe away any excess corrosion inhibitor.

CAUTION

Equipment damage. Verify all conductors are tightened to the factory specified torque value. Failure to do so could result in damage to the switch base. (000120)

Connect power source and load conductors to clearly marked terminal lugs on transfer mechanism as follows:

1. Connect utility (normal) power source cables to utility service disconnect circuit breaker if equipped, or N1 and N2 lugs of the transfer switch. See Figure 2-1.
2. Connect the generator (standby) source power cables to transfer switch terminals E1, E2.
3. Connect customer LOAD leads to switch terminals T1, T2.

3.4 — Connecting Start Circuit Wires

Control system interconnections may consist of N1, N2, and T1, and leads 23 and 194. The generator control wiring is a Class 1 signaling circuit. Reference instruction manual of specific engine generator for wiring connection details. Recommended wire gauge sizes for this wiring depends on the length of the wire, as recommended in the following chart:

Maximum Wire Length	Recommended Wire Size
1-115 ft (1-35m)	No. 18 AWG.
116-185 ft (36-56m)	No. 16 AWG.
186-295 ft (57-89m)	No. 14 AWG.
296-460 ft (90-140m)	No. 12 AWG.

Exception: Conductors of AC and DC circuits, rated 1000 volts nominal, or less, shall be permitted to occupy the same equipment, cable, or conduit. All conductors shall have an insulation rating equal to at least the maximum circuit voltage applied to any conductor within the equipment, cable, or conduit. See NEC 300.3(C)(1).

3.5 — Connecting Smart A/C Module

The Smart A/C Module can control an air conditioner (24 VAC) directly. See Figure 3.1.

3.5.1— Control of Air Conditioner Load

1. Route the thermostat cable (from the furnace/thermostat to the outdoor air conditioner unit) to the transfer switch.
2. Connect the wire to the terminal strip terminals (A/C 1) on the Smart A/C Module as shown in Figure 3.1. These are normally closed contacts which open upon load shed conditions. Route thermostat wire away from high voltage wires.
3. If required, connect additional air conditioners to the terminal strip terminals (A/C 2-4).

Contact Ratings	
A/C 1-4	24 VAC, 1.0 Amp Max

NOTE: These instructions are for a typical air conditioner installation. Control of certain heat pumps and 2-stage air conditioners may require special connections or the use of Smart Management Modules (SMM) to control the loads.

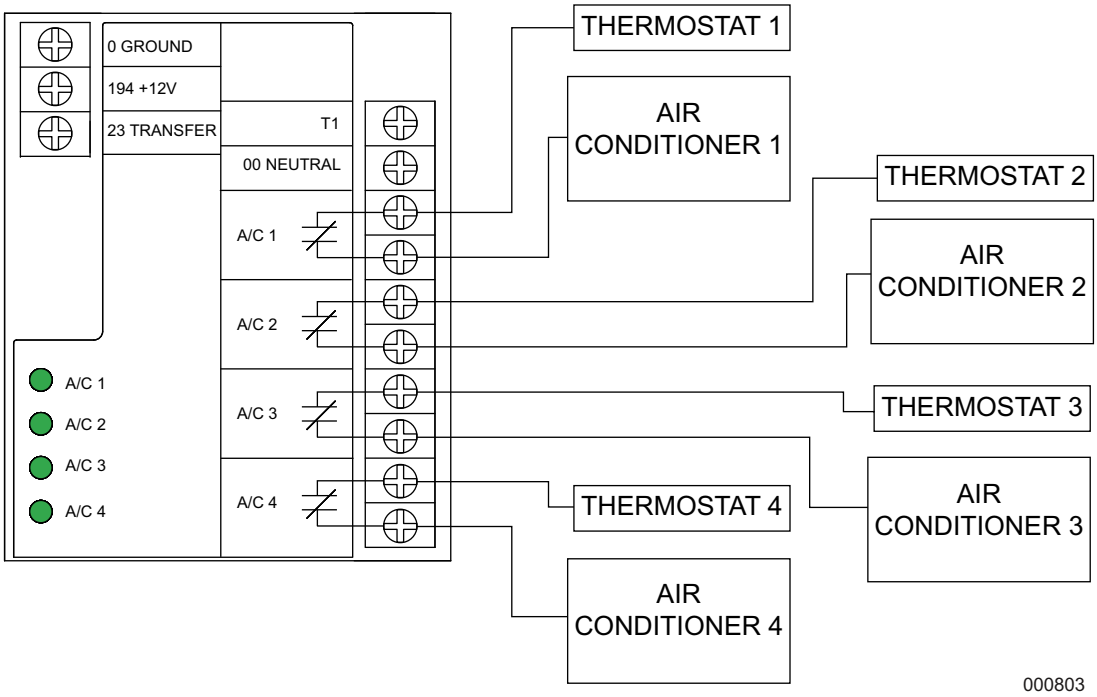

Figure 3-1. Typical Smart A/C Connections

3.6 — Auxiliary Contacts

If desired, there are Auxiliary Contacts on the transfer switch to operate customer accessories, remote advisory lights, or remote annunciator devices. A suitable power source must be connected to the common terminal (D). See Figure 3-2.

Contact operation is shown in the following chart:

	Switch Position	
	Utility	**Standby**
Common to Normally Open	Open	Closed
Common to Normally Closed	Closed	Open

NOTE: Auxiliary Contacts are rated 10 amps at 125 or 250 volts AC.

⚠CAUTION

Equipment damage. Exceeding rated voltage and current will result in damage to the auxiliary contacts.

(000134)

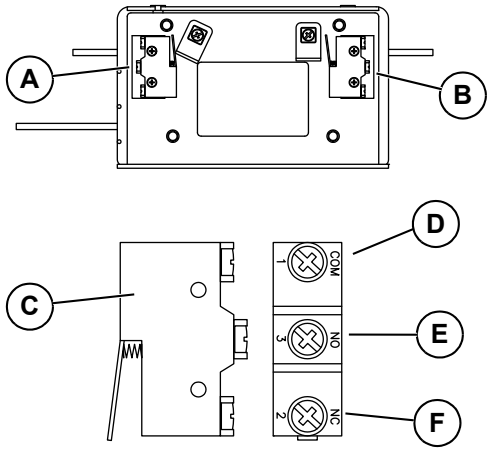

000140

Figure 3-2. Auxiliary Contacts

A	Auxiliary Contact (Actuated)
B	Auxiliary Contact (Non-Actuated)
C	Single Contact (Utility Position)
D	Common Terminal
E	Normally Open Terminal
F	Normally Closed Terminal

This page intentionally left blank.

Section 4 Operation

4.1 — Functional Tests and Adjustments

Following transfer switch installation and interconnection, inspect the entire installation carefully. A competent, qualified electrician should inspect it. The installation should comply strictly with all applicable codes, standards, and regulations. When absolutely certain the installation is proper and correct, complete a functional test of the system.

⚠CAUTION

Equipment damage. Perform functional tests in the exact order they are presented in the manual. Failure to do so could result in equipment damage.

(000121)

IMPORTANT: Before proceeding with functional tests, read and make sure all instructions and information in this section is understood. Also read the information and instructions of labels and decals affixed to the switch. Note any options or accessories that might be installed and review their operation.

4.2 — Manual Operation

⚠DANGER

Electrocution. Do not manually transfer under load. Disconnect transfer switch from all power sources prior to manual transfer. Failure to do so will result in death or serious injury, and equipment damage.

(000132)

A manual handle is shipped with the transfer switch. See 1 in Figure 4-1. Manual operation must be checked BEFORE the transfer switch is operated electrically. To check manual operation, proceed as follows:

1. Ensure the generator is in the OFF mode.
2. Turn OFF both UTILITY (service disconnect circuit breaker) and EMERGENCY (generator main line circuit breaker) power supplies to the transfer switch.
3. Note position of transfer mechanism main contacts by observing the movable contact carrier arm. This can be viewed through the long narrow slot in the inside cover of the ATS. The top of the movable contact carrier arm is yellow to be easily identified.
   - Manual operation handle in the UP position - LOAD terminals (T1, T2) are connected to UTILITY terminals (N1, N2).
   - Manual operation handle in the DOWN position - LOAD terminals (T1, T2) are connected to EMERGENCY terminals (E1, E2).

⚠CAUTION

Equipment damage. Do not use excessive force while manually operating the transfer switch. Doing so could result in equipment damage.

(000122)

4.2.1— Close to Utility Source Side

Before proceeding, verify the position of the switch by observing the position of manual operation handle in Figure 4-1. If the handle is UP, the contacts are closed in the NORMAL (UTILITY) position, no further action is required. If the handle is DOWN, proceed with Step 1.

1. With the handle inserted into the movable contact carrier arm (see A in Figure 4-1), move handle UP. Be sure to hold on to the handle as it will move quickly after the center of travel.
2. Remove manual operating handle from movable contact carrier arm. Return handle to storage bracket (see B in Figure 4-1).

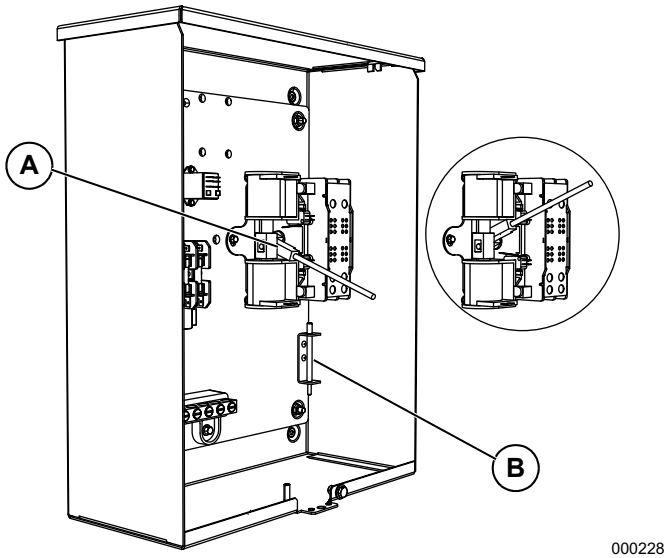

Figure 4-1.

4.2.2— Close to Generator Source Side

Before proceeding, verify the position of the switch by observing the position of the manual operation handle in Figure 4-1. If the handle is DOWN, the

contacts are closed in the GENERATOR (STANDBY) position. No further action is required. If the handle is UP, proceed with Step 1.

1. With the handle inserted into the movable contact carrier arm, move the handle DOWN. Be sure to hold on to the handle as it will move quickly after the center of travel.
2. Remove manual operating handle from movable contact carrier arm. Return handle to storage bracket.

4.2.3— Return to Utility Source Side

1. Manually actuate switch to return manual operating handle to the UP position.
2. Remove manual operating handle from movable contact carrier arm. Return handle to storage bracket.

4.3 — Voltage Checks

4.3.1— Utility Voltage Checks

1. Turn ON the UTILITY power supply to the transfer switch using the utility service disconnect circuit breaker.

DANGER

Electrocution. High voltage is present at transfer switch and terminals. Contact with live terminals will result in death or serious injury.

(000129)

2. With an accurate AC voltmeter, check for correct voltage. Measure across ATS terminal lugs N1 and N2; N1 to NEUTRAL and N2 to NEUTRAL.

DANGER

Electrocution. Turn utility supply OFF before working on utility connections of the transfer switch. Failure to do so will result in death or serious injury.

(000123)

4.3.2— Generator Voltage Checks

1. On the generator panel, select the MANUAL mode of operation. The generator should crank and start.
2. Let the generator stabilize and warm up at no-load for at least five minutes.
3. Set the generator's main circuit breaker (CB1) to its ON or CLOSED position.

DANGER

Electrocution. High voltage is present at transfer switch and terminals. Contact with live terminals will result in death or serious injury.

(000129)

4. With an accurate AC voltmeter and frequency meter, check the no-load, voltage and frequency. Measure across ATS terminal lugs E1 to E2; E1 to NEUTRAL and E2 to NEUTRAL.

Frequency	60-62 Hz
Terminals E1 to E2	240-246 VAC
Terminals E1 to NEUTRAL	120-123 VAC
Terminals E2 to NEUTRAL	120-123 VAC

5. When certain that generator supply voltage is correct and compatible with transfer switch ratings, turn OFF the generator supply to the transfer switch.
6. Set the generator main circuit breaker (CB1) to OFF or OPEN.
7. On the generator panel, select the OFF mode to shut down the generator.

NOTE: Do NOT proceed until generator AC output voltage and frequency are correct and within stated limits. If the no-load voltage is correct but no-load frequency is incorrect, the engine governed speed may require adjustment. If no-load frequency is correct but voltage is not, the voltage regulator may require adjustment.

4.4 — Generator Tests Under Load

1. Set the generator main circuit breaker to OFF or OPEN.
2. Set the utility service disconnect circuit breaker to OFF or OPEN.
3. Manually actuate the transfer switch main contacts to the emergency (Standby) position. See “Manual Operation”.
4. To start the generator, select the MANUAL mode of operation. When engine starts, let it stabilize for a few minutes.
5. Set the generator main circuit breaker to ON or CLOSED. The generator now powers all LOAD circuits. Check generator operation under load as follows:
   - Turn on electrical loads to the full rated wattage/amperage capacity of the generator. DO NOT OVERLOAD.

- With maximum rated load applied, check voltage and frequency across transfer switch terminals E1 and E2. Voltage should be greater than 230 VAC (240 VAC system); frequency should be greater than 59 Hz.
- Verify that the gas pressure remains within acceptable parameters (see the generator Installation Guidelines manual).
- Let the generator run under rated load for at least 30 minutes. With unit running, listen for unusual noises, vibration, overheating, etc., that might indicate a problem.

6. When checkout under load is complete, set main circuit breaker of the generator to the OFF or OPEN position.
7. Let the generator run at no-load for several minutes. Then, shut down by selecting the OFF mode.
8. Move the main switch contacts back to the utility position.

NOTE: See “Manual Operation”. Handle and operating lever of transfer switch should be in down position.

9. Turn on the utility power supply to transfer switch, using whatever means provided (such as a utility main line circuit breaker). The utility power source now powers the loads.
10. The system is now set for fully automatic operation.

4.5 — Checking Automatic Operation

To check the system for proper automatic operation, proceed as follows:

1. Verify generator is in OFF mode.
2. Verify switch is de-energized.
3. Install front cover of the transfer switch.
4. Turn the utility power supply to the transfer switch ON, using the utility main line circuit breaker.
5. Set the generator main circuit breaker to ON.
6. On the generator panel, select AUTO. The system is now ready for automatic operation.
7. Turn utility power supply to the transfer switch OFF.

With the generator ready for automatic operation, the engine should crank and start when the utility source power is turned OFF after a ten second delay (factory default setting). After starting, the transfer switch should connect load circuits to the standby side after a five (5) second delay. Let the system operate through its entire automatic sequence of operation.

With the generator running and loads powered by generator AC output, turn ON the utility power supply to the transfer switch. The following should occur:

- After approximately 15 seconds, the switch should transfer loads back to the utility power source.
- Approximately one minute after re-transfer, the engine should shut down.

With the generator in the AUTOMATIC mode, the system is now set for fully automatic operation.

4.6 — Installation Summary

1. Verify the installation has been properly performed as outlined by the manufacturer and that it meets all applicable laws and codes.
2. Verify proper operation of the system as outlined in the appropriate installation and owner’s manuals.
3. Educate the end-user on the proper operation, maintenance and service call procedures.

4.7 — Shutting Generator Down While Under Load

Important! To turn the generator off during utility outages to perform maintenance, or conserve fuel, follow these steps:

To turn the generator OFF (while running in AUTO and online):

1. Turn the main utility disconnect OFF.
2. Turn the main line circuit breaker (MLCB) on the generator to OFF (OPEN).
3. Turn the generator OFF.

To turn the generator back ON:

1. Put the generator back into AUTO and allow to start and warm-up for a few minutes.
2. Set the MLCB on the generator to ON.

The system will now be operating in automatic mode. The main utility disconnect can be turned ON (CLOSED).

If Utility returns, the transfer switch will return to utility mode and the generator will cycle off after it times out.

4.8 — Testing The Smart A/C Module

A Test pushbutton is provided on the bottom of the Smart A/C Module to test the operation of the load shed functions. The Test button will work when the ATS is in the Utility or the Generator position.

1. Turn on the Utility supply to the ATS.
2. Verify managed loads are powered and all LEDs illuminate on Smart A/C Module.
3. Press the TEST button on the Smart A/C Module.
4. Verify that all of the connected loads to be “shed” become disabled.

5. After five (5) minutes verify A/C 1 is energized and Status LED A/C 1 is ON.
6. After another 15 seconds, verify A/C 2 is energized and Status LED A/C 2 is ON.
7. After another 15 seconds, verify Load A/C 3 is energized and Status LED Load A/C 3 is ON.
8. After another 15 seconds, verify A/C 4 is energized and Status LED A/C 4 is ON.

4.9 — Testing The Smart Management Module

Refer to the SMM Owner's/Installation Manual for testing that product.

Section 5 Drawings and Diagrams

5.1 — Installation Drawing

5.1.1— No. 0G6832-A 100A SE & non-SE/150-200A non-SE

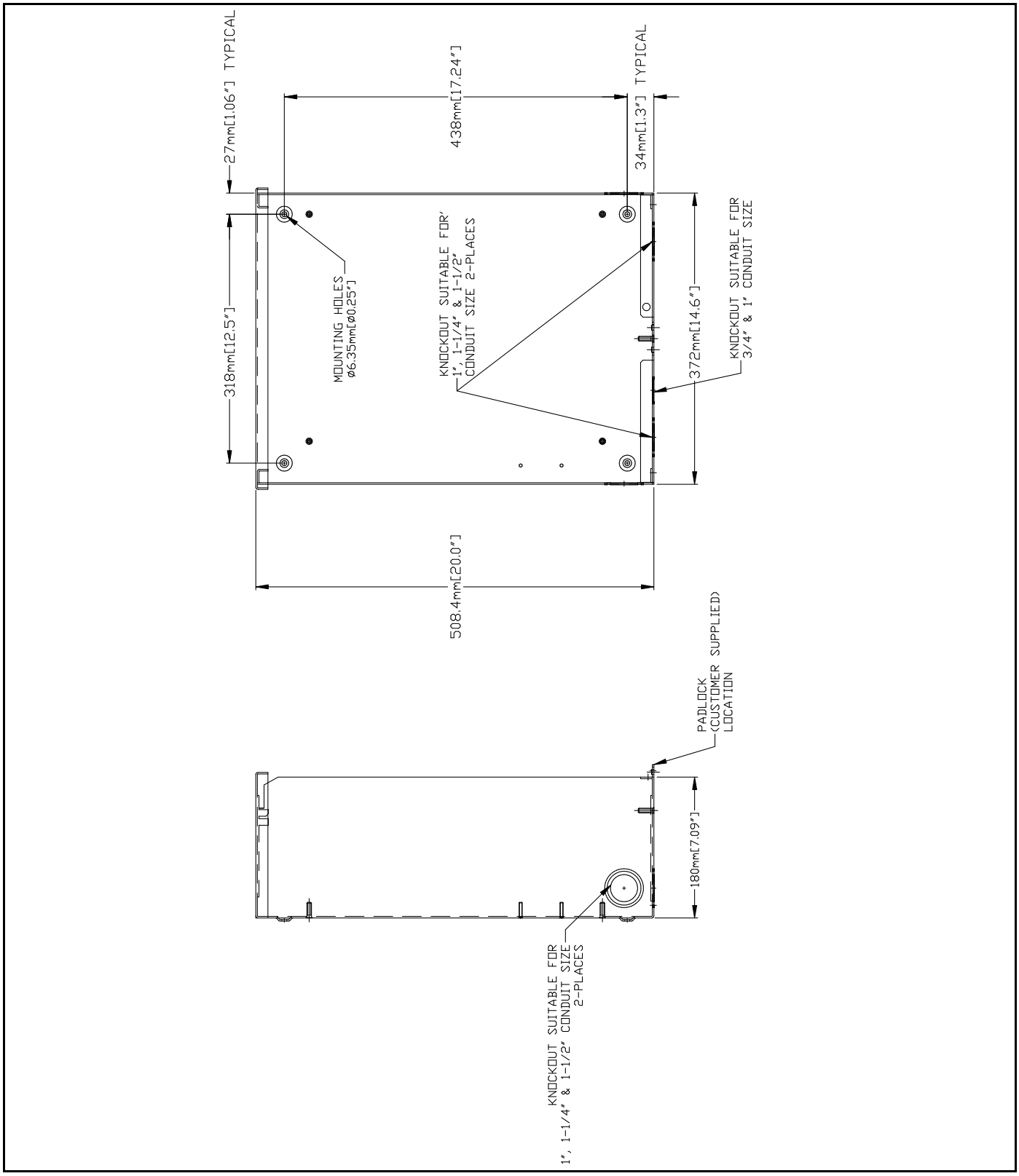

5.1.2— No. 0K2422-A 150/200A SE

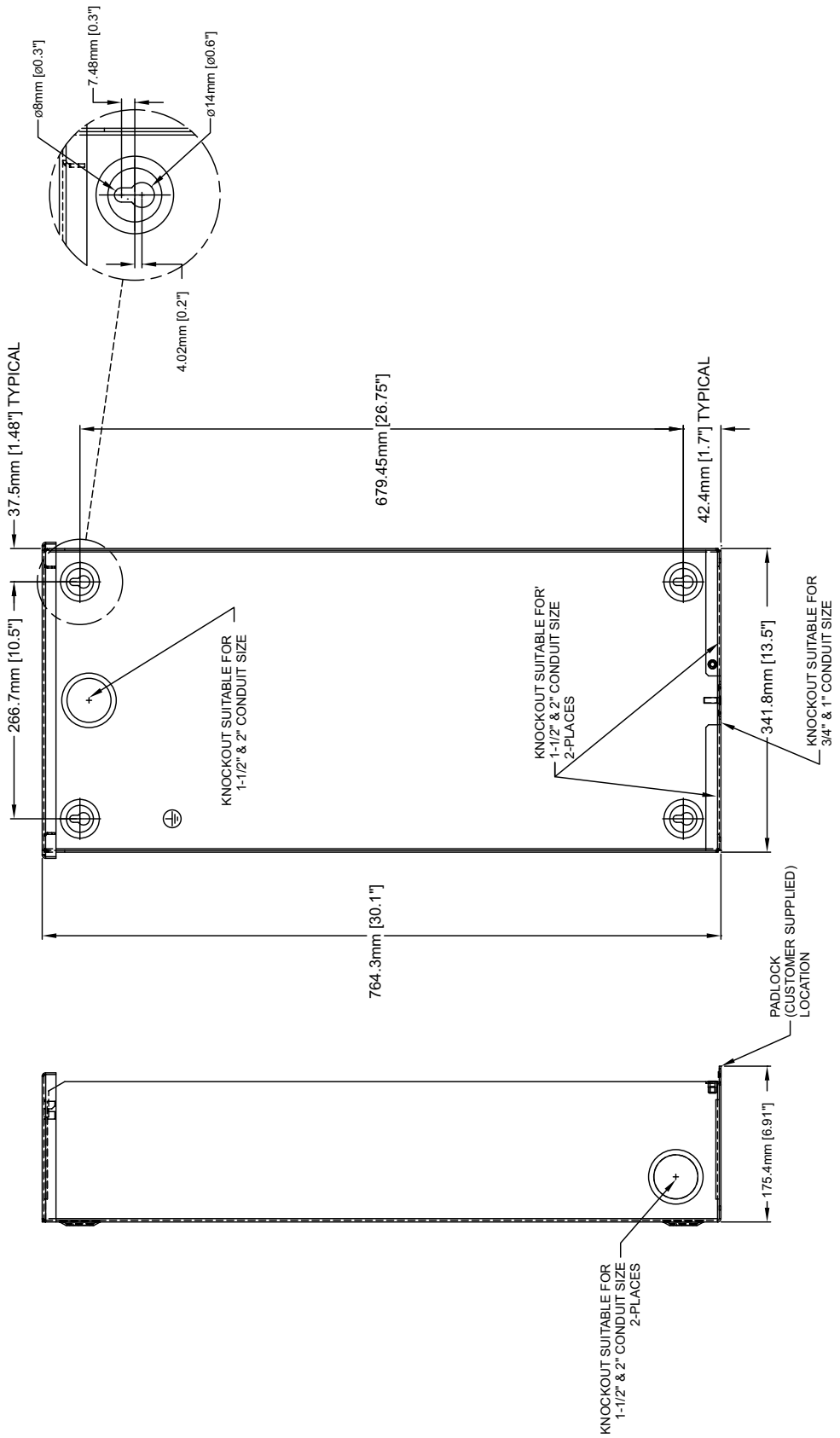

This page intentionally left blank.

5.2 — Interconnection Drawing

5.2.1— No. 0L3240-A (Part 1 of 4) Liquid-cooled Generator

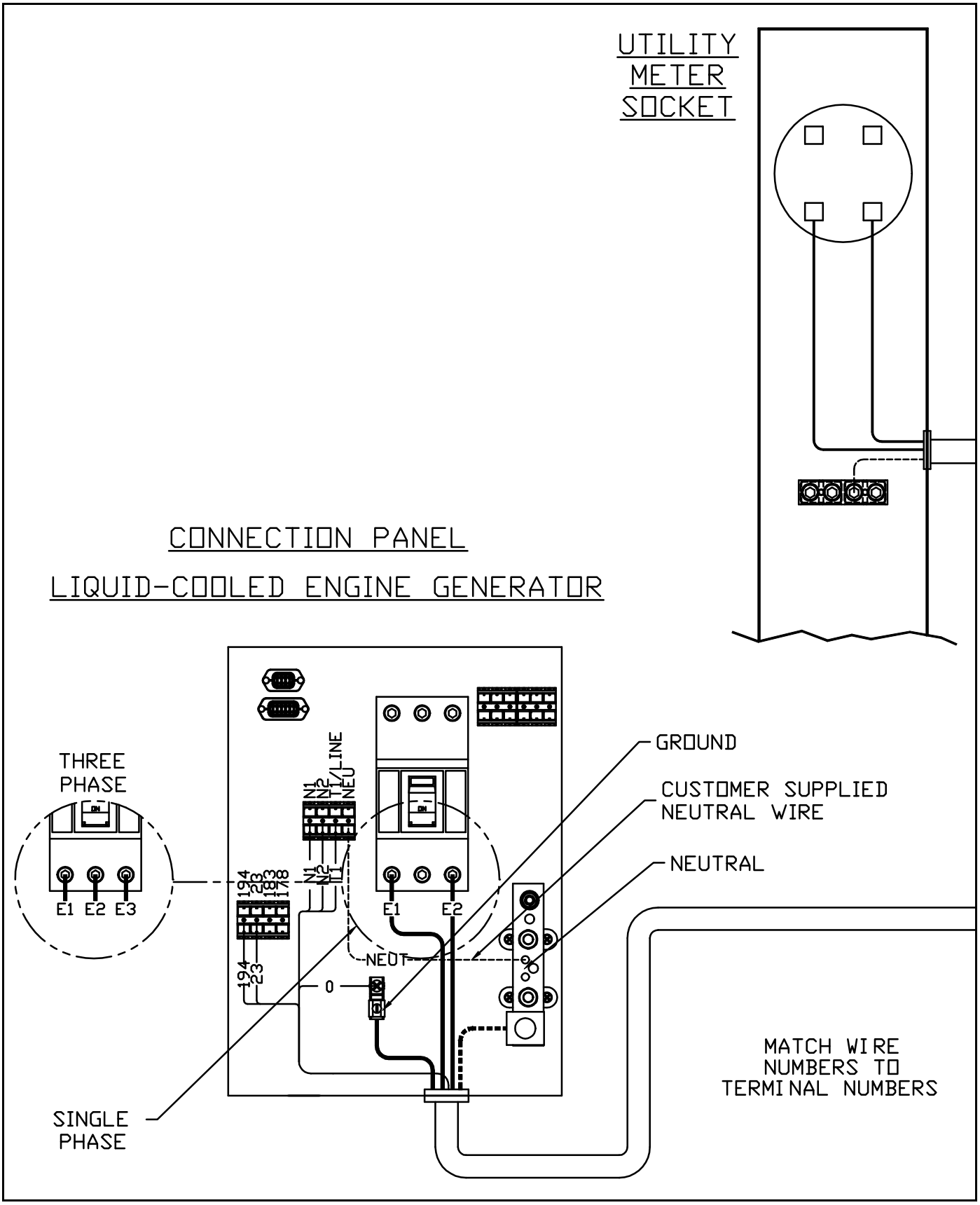

5.2.2— No. 0L3240-A (Part 2 of 4) Liquid-cooled Generator

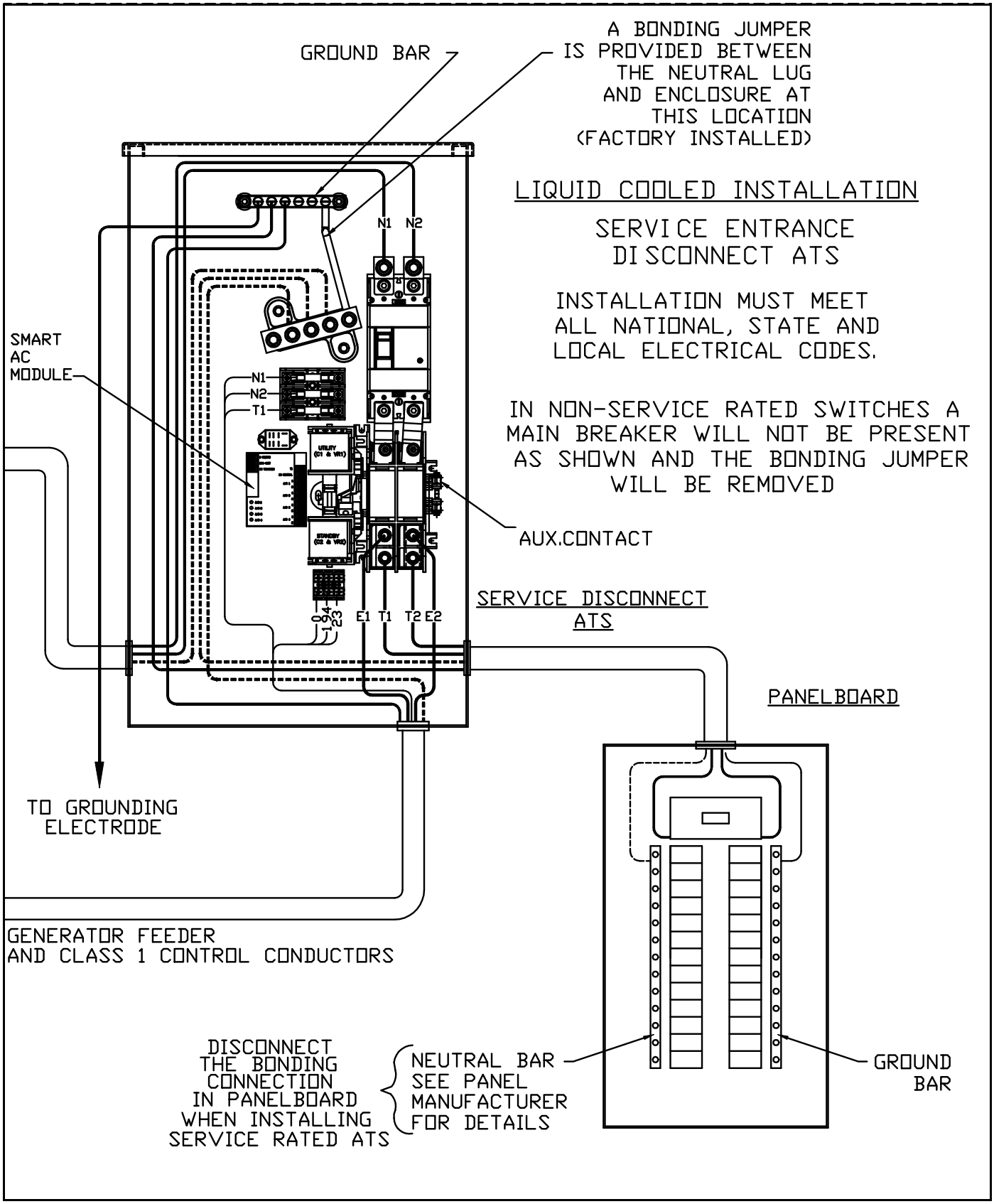

5.2.3— No. 0L3240-A (Part 3 of 4) Air-cooled Generator

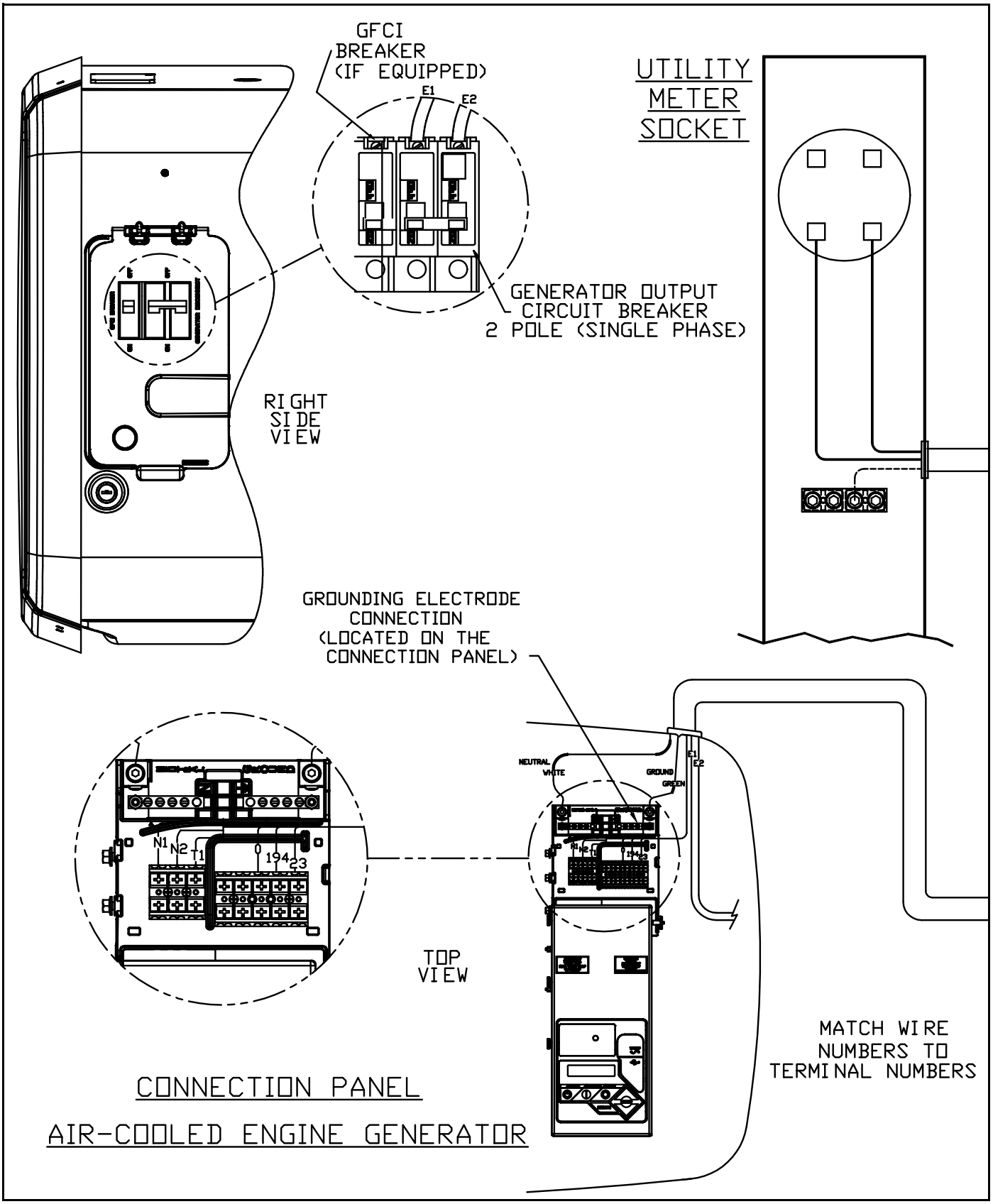

5.2.4— No. 0L3240-A (Part 4 of 4) Air-cooled Generator

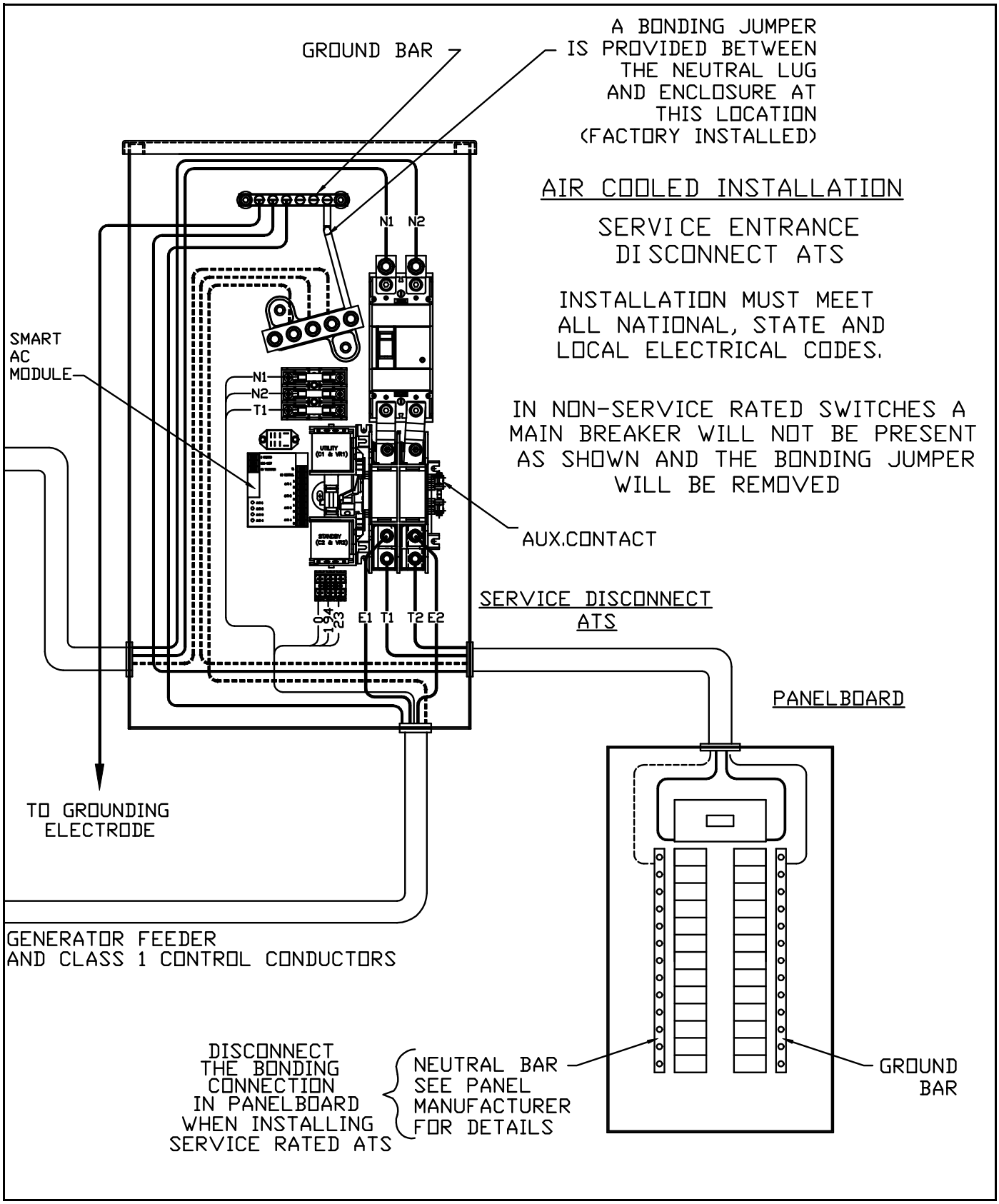

This page intentionally left blank.

Part No. 0L3202 Rev. A 05/15/15 Printed in USA
©2015 Generac Power Systems, Inc. All rights reserved
Specifications are subject to change without notice.
No reproduction allowed in any form without prior written consent from Generac Power Systems, Inc.

Generac Power Systems, Inc.
S45 W29290 Hwy. 59
Waukesha, WI 53189
1-888-GENERAC (1-888-436-3722)
generac.com

GROUP C

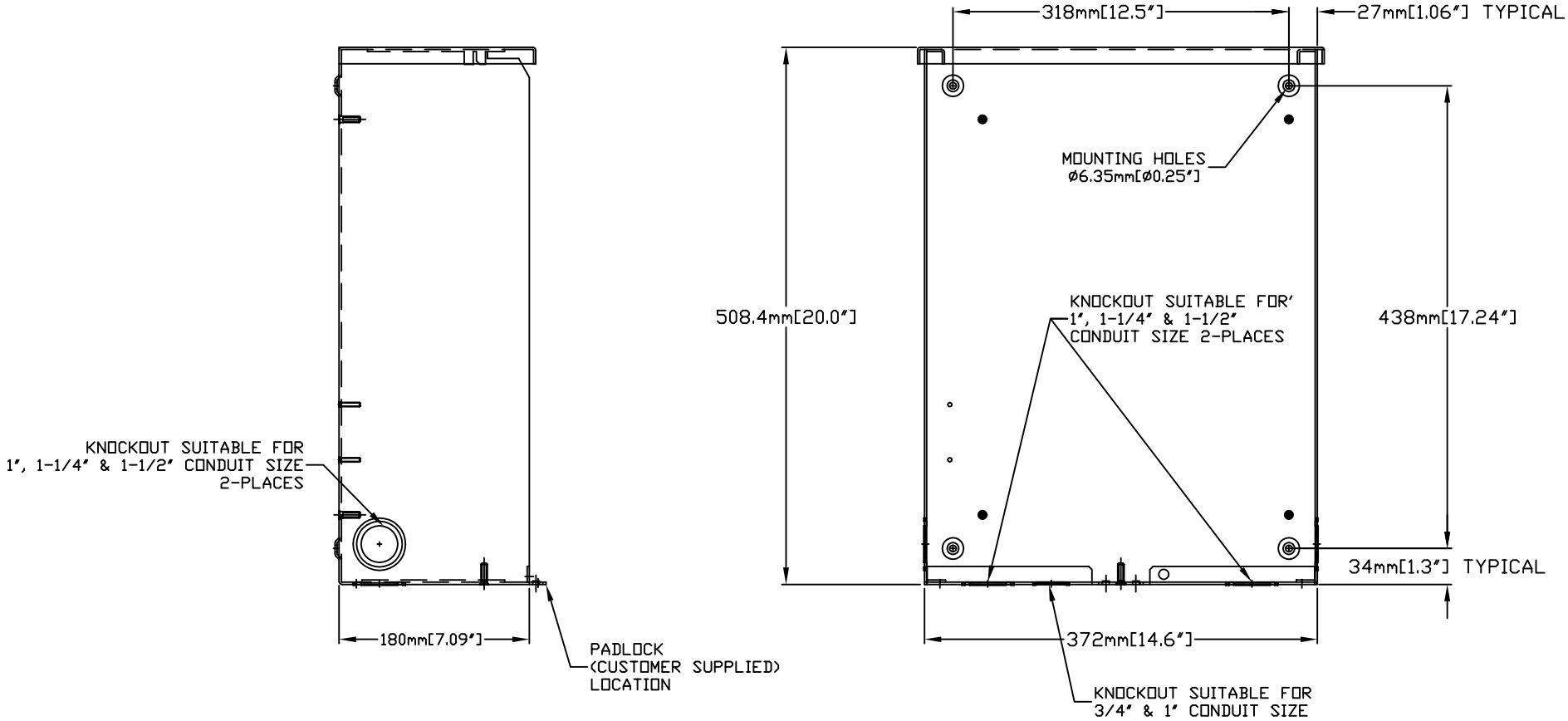

EXPLODED VIEW:
HS TRANSFER SWITCH
DRAWING #: 0G6832

REVISION: -A-
DATE: 9/12/07

GROUP G

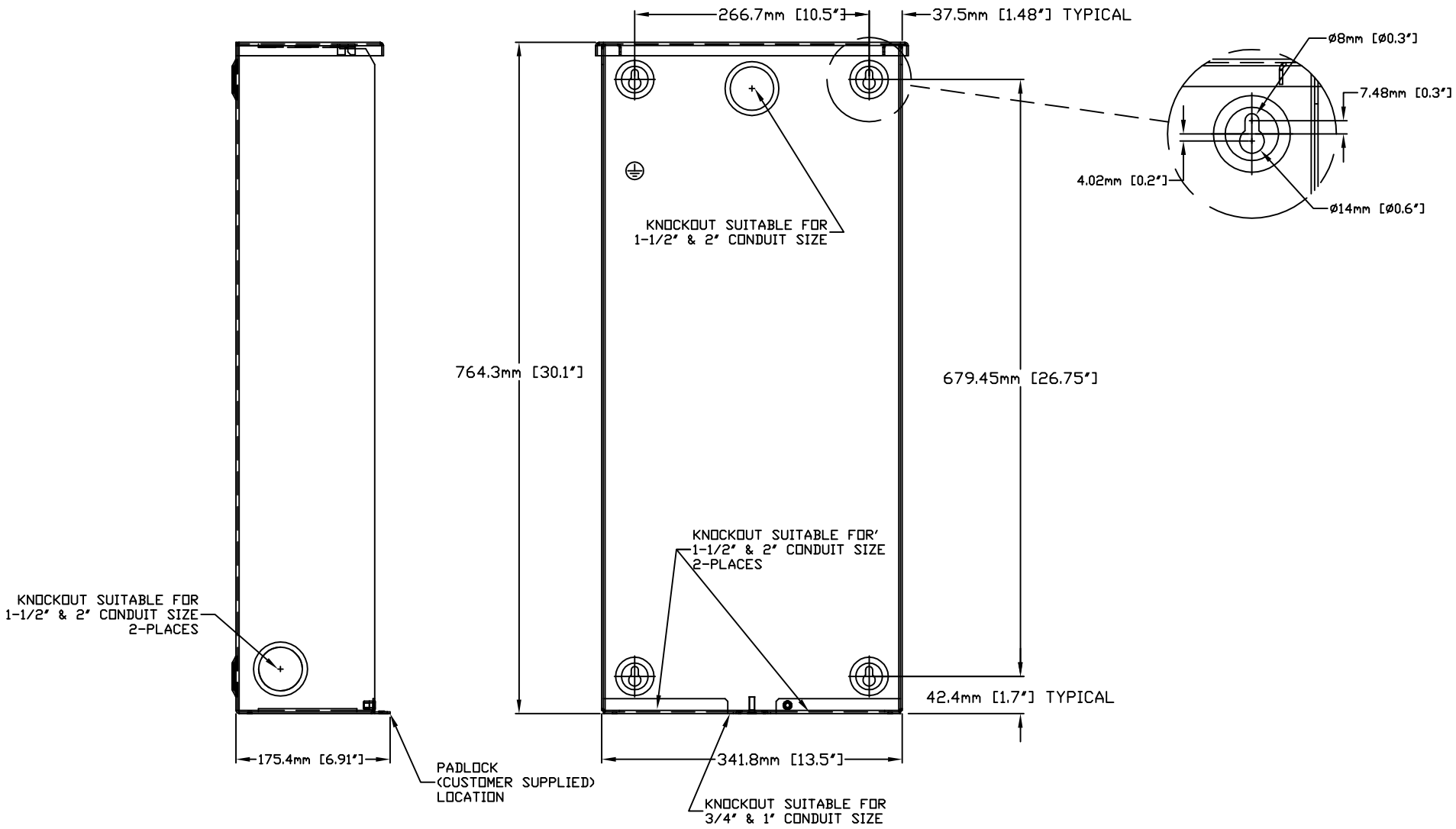

EXPLODED VIEW:
150/200A SE XFER SWITCH
DRAWING #0K2422

REVISION:-A-
DATE: 12/5/12

THIS PAGE IS LEFT INTENTIONALLY BLANK

SH	REV	WINDCHILL VERSION
1/1	C	C.2

ITEM #	PART #	QTY	DESCRIPTION
1	0L2910	1	XFRSW HSB 100A 2P 250V
2	074908	4	SCREW HHTT M5-0.8 X 10 BP
3	077033	6	LUG SLDLSS 1/0-#14X9/16 AL/CU
4	0G7624	6	SCREW PPHM #10-32 X 5/16
5	022152	6	WASHER LOCK #10
6	0A1495	4	SCREW HHTT M4-0.7 X 10 BP
7	G074138	1	LUG DIS QK NI-S 10X45 DEG BR/T
** 8	0K0103	1	RELAY PNL 12VDC DPDT 10A@240VA
** 9	0D2572	1	FUSEBLOCK 30A 600V 3POS W/SQ
10	073590A	3	FUSE 5A X BUSS
** 11	0D7393T	1	TERM BLOCK 3P UL 12-20AWG
12	0L3068	2	SCREW THTT M3-0.5 X 25 ZP
13	0K0108	1	ASSY-NEUT BLK 100A
14	090388	2	SCREW HHTT M6-1.0 X 12 ZINC
15	0K01120ALOR	1	ENCLOSURE 100/200A XFER SW_RAW
16	0K01130ALOR	1	COVER 100A XFER SWITCH_INST_RAW
17	0K0114	1	SUBPLATE,100/200A XFER SW
18	0H7917	1	DECAL CUSTOMER CONN RTS
19	0G8411	6	NUT HEX FL WHIZ 1/4-20
20	0A9457	1	DECAL, NEUTRAL
21	0A9517	1	DECAL MANUAL 5A FUSE
* 22	0K1098	1	DECAL RTS TRANSFER SW GENERAC
23	0K1800	1	DECAL TEST SEQUENCE 100/200A NON
24	0G3274	1	DECAL LIVE CIRCUIT ENG/FRN/SPN
25	0H6389	1	DECAL UTILITY LOAD SENSE 240V
26	0J8202	1	LUG SLDLSS 2/0-#14X#10-32X.125
27	026850	2	WASHER LOCK EXT 1/4 STL
28	022473	4	WASHER FLAT 1/4-M6 ZINC
* 29	0K1799A	1	DECAL DATA NON SE SW 100A
30	085296	1	SCREW HHC 1/4-20 X 1/2 SS
31	0D6162	2	RIVET POP .156 X .362 AL
32	0E6155	1	PIN ARM EXTENDER
33	0E6193	1	BRACKET, ARM EXTENDER
34	0F2659	2	SCREW HHTT M3-0.5 X 6 BP
35	0A2115	1	WASHER NYLON .257
36	026902	1	SCREW HHTT #8-32 X 1/4 CZ
37	0H7270	1	CHANNEL SNAPTRACK 76.2 X 101.2
38	0L3123	1	ASSY SMART AC MOD
39	0H7274	1	DECAL NEC COMPLIANCE
40	0L6699	1	NUT TRIC 1/4-20 ALUM
41	0L3246	1	WIRE HARNESS 100/200A RTS

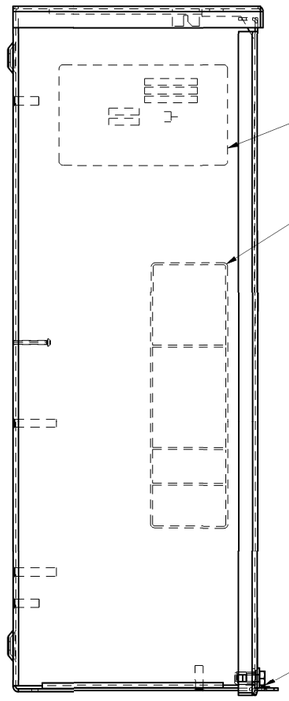

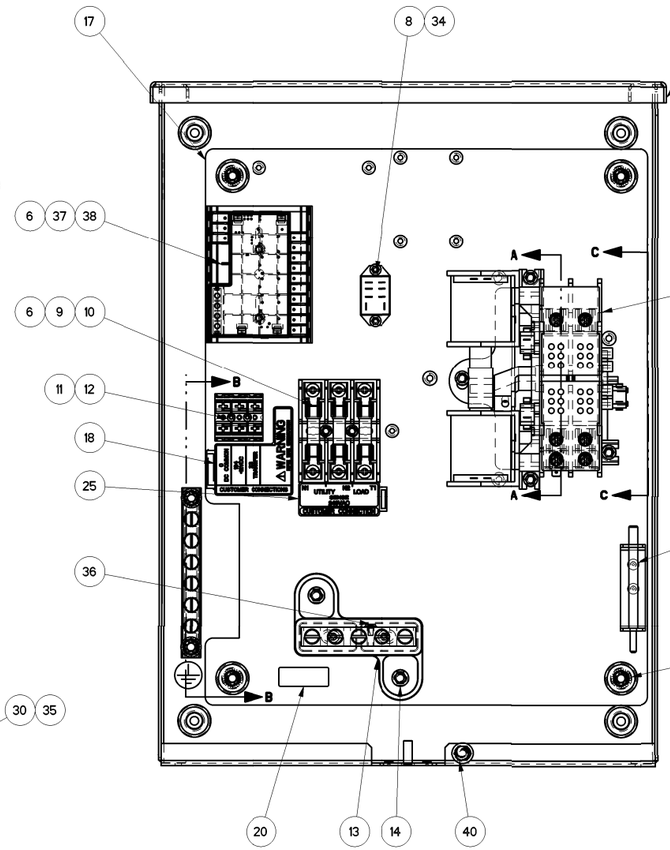

ITEM #28 ONE MOUNTED UNDER ONE MOUNTED OF TOP OF SUBPLATE ITEM #17 4 PLACES

CENTER DECAL APPROXIMATELY 6-1/4" DOWN FROM TOP OF COVER USING ASSEMBLY TEMPLATE

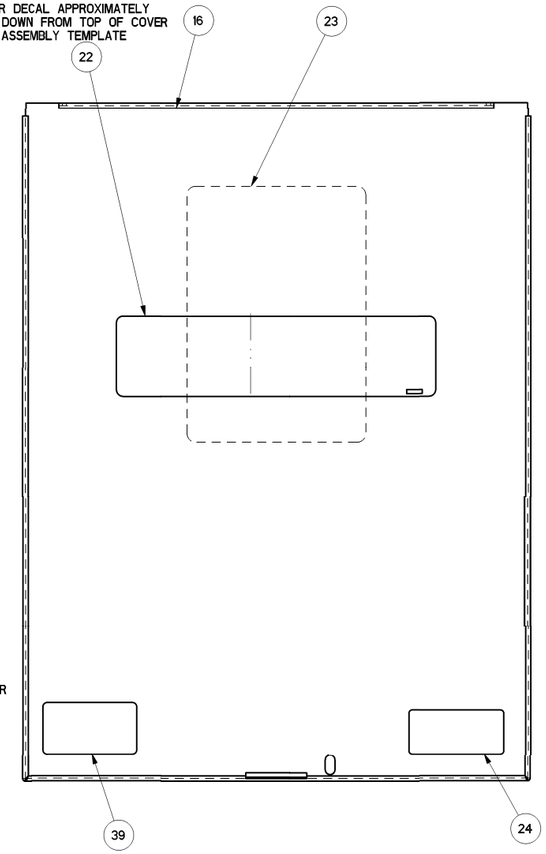

*-SERIAL NUMBER AND FRONT DECAL PER MODEL
**-SUPPLIED WITH HARNESS ITEM #41

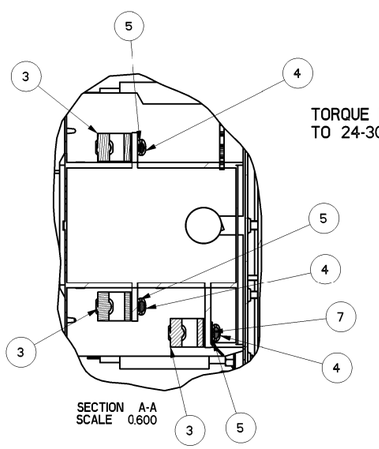

TORQUE ITEM #4 TO 24-30 IN-LBS

SECTION A-A
SCALE 0.600

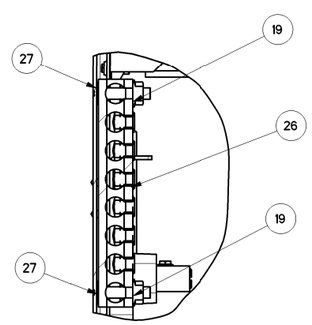

SECTION B-B
SCALE 0.600

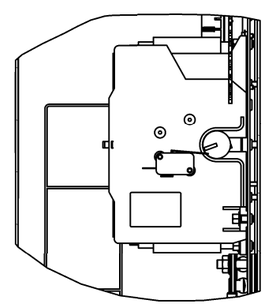

SECTION C-C

PART NUMBER	DESCRIPTION	ITEM # 29	ITEM # 22
0L3210	ASSEMBLY 100A 120/240 NON SE	0K1799A	PER MODEL
0L3210A	EXPLODED VIEW DRAWING	N/A	N/A
0L3210B	ASSEMBLY 100A 120/240 NON SE	0K1799A	0K1098
0L3210C	ASSEMBLY 100A 120/240 NON SE	0J3806A	0K1274

REFERENCE DRAWINGS

0L3241	SCHEMATIC/WIRING DIAGRAMS
0F6778	CARTON 30'5 X 14'2 X 7'8
0H7275	TEST PROC HSB XFRSW
0K0115	KIT ENCL 100/200A NON SE AL

DRAWING CREATED FROM PRO/ENGINEER 3D FILE. ECO MODIFICATION TO BE APPLIED TO SOLID MODEL ONLY.

GENERAL TOLERANCES UNLESS NOTED
ALL XX : ± 0.4 MM
XX.X : ± 0.4 MM
XX.XX : ± 0.05 MM
ALL ANG : ± 1°
INTERPRET DIM AND TOL PER ASME Y14.5M-1994

THIRD ANGLE PROJECTION

GENERAC POWER SYSTEMS DWG THE COPYRIGHT OF THIS DRAWING WHICH IS SUPPLIED IN CONFIDENCE AND MUST NOT BE USED FOR ANY PURPOSE OTHER THAN FOR WHICH IT IS SUPPLIED WITHOUT THE EXPRESS WRITTEN CONSENT OF GENERAC POWER SYSTEMS. © GENERAC POWER SYSTEMS 2010

ELECTRONICALLY APPROVED INSIDE WINDCHILL

GENERAC

TITLE
ASSEMBLY DWG 2-POLE 100A 120/240V

ISSUE DATE:

SIZE	CAGE NO	DWG NO	REV
D	N/A	0L3210$	C
SCALE 0.450		WT-KG 22428213.10	SHEET 1 of 1

GENERAL ASSEMBLY DRAWING

SH	REV	WINDCHILL VERSION
1/1	C	C.2

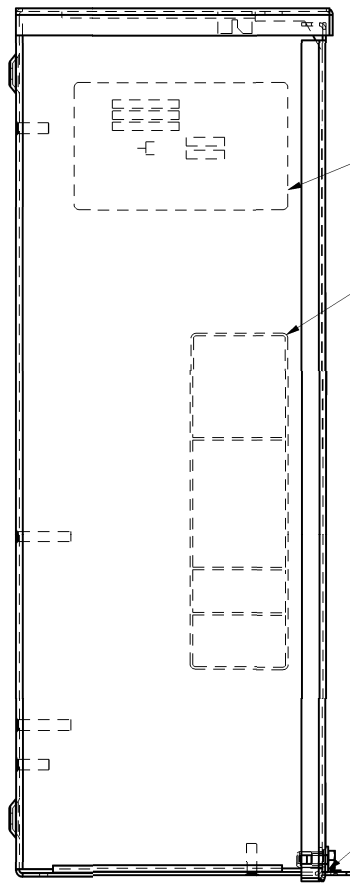

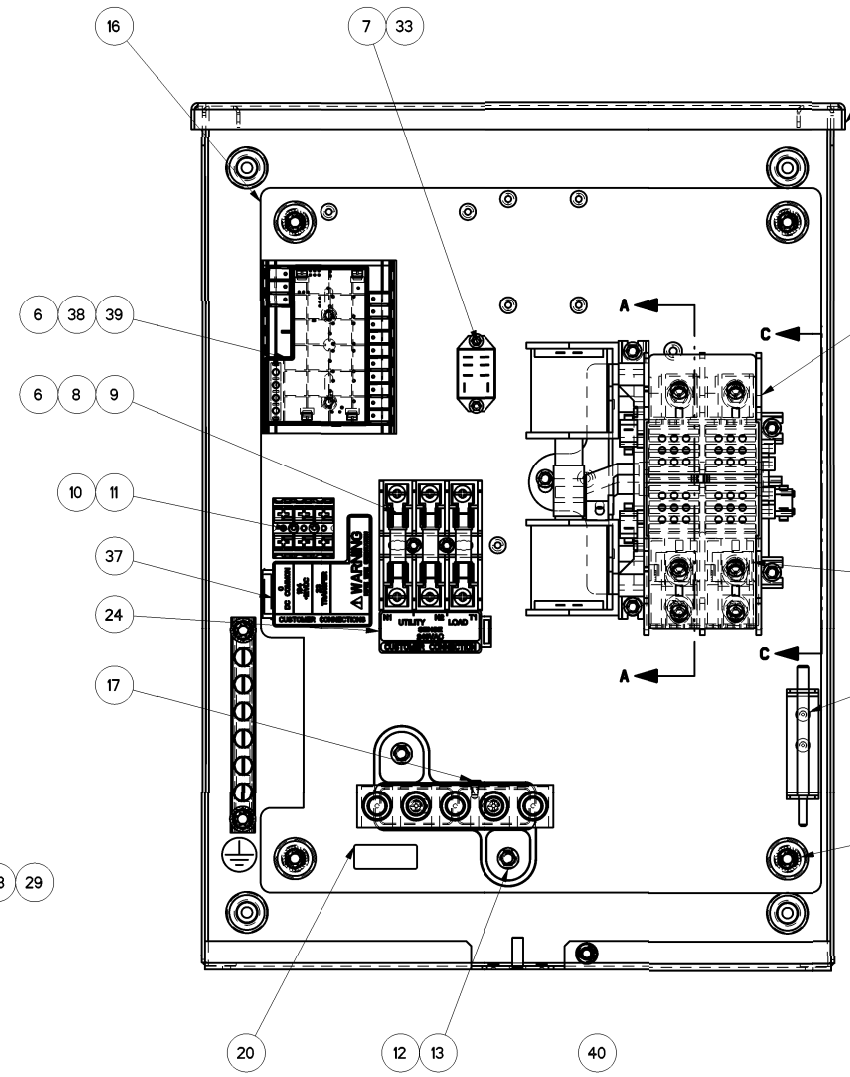

ITEM #27 ONE MOUNTED UNDER ONE MOUNTED OF TOP OF SUBPLATE ITEM #16
4 PLACES

CENTER DECAL APPROXIMATELY 6-1/4" DOWN FROM TOP OF COVER USING ASSEMBLY TEMPLATE

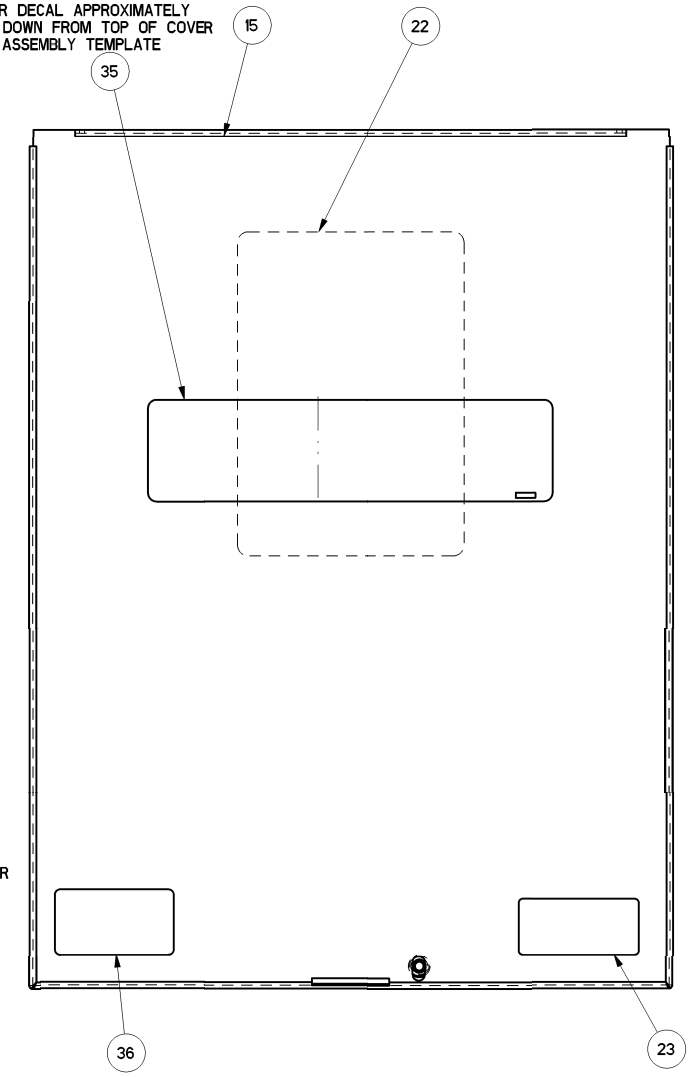

ITEM #	PART #	QTY	DESCRIPTION
1	0L2911	1	XFRSW HSB 200A 2P 250V
2	074908	5	SCREW HHTT M5-0.8 X 10 BP
3	0E3375	6	LUG SLDLSS 250-#6 AL/CU
4	0F1252	6	SCREW BHSC 1/4-20 X 3/8
5	022097	6	WASHER LOCK M6-1/4
6	0A1495	4	SCREW HHTT M4-0.7 X 10 BP
** 7	0K0103	1	RELAY PNL 12VDC DPDT 10A@240VA
** 8	0D2572	1	FUSEBLOCK 30A 600V 3POS W/SQ
9	073590A	3	FUSE 5A X BUSS
** 10	0D7393T	1	TERM BLOCK 3P UL 12-20AWG
11	0L3068	2	SCREW THTT M3-0.5 X 25 ZP
12	0K0108A	1	ASSY-NEUT BLK 200A W/TAP
13	090388	2	SCREW HHTT M6-1.0 X 12 ZINC
14	0K01120ALOR	1	ENCLOSURE 100/200A XFER SW_RAW
15	0K01130ALOR	1	COVER 100A XFER SWITCH_INST_RAW
16	0K0114	1	SUBPLATE,100/200A XFER SW
17	026902	1	SCREW HHTT #8-32 X 1/4 CZ
* 18	0K1799B	1	DECAL DATA NON SE SW 200A
19	0A9517	1	DECAL MANUAL 5A FUSE
20	0A9457	1	DECAL, NEUTRAL
21	0E6033	2	90 DEGREE DN SPADE CONNECTOR
22	0K1800	1	DECAL TEST SEQUENCE 100/200A NON
23	0G3274	1	DECAL LIVE CIRCUIT ENG/FRN/SPN
24	0H6389	1	DECAL UTILITY LOAD SENSE 240V
25	0J8202	1	LUG SLDLSS 2/0-#14X#10-32X.125
26	026850	2	WASHER LOCK EXT 1/4 STL
27	022473	4	WASHER FLAT 1/4-M6 ZINC
28	0A2115	1	WASHER NYLON .257
29	085296	1	SCREW HHC 1/4-20 X 1/2 SS
30	0D6162	2	RIVET POP .156 X .362 AL
31	0E6155	1	PIN ARM EXTENDER
32	0E6193	1	BRACKET, ARM EXTENDER
33	0F2659	2	SCREW HHTT M3-0.5 X 6 BP
34	0G8411	6	NUT HEX FL WHIZ 1/4-20
* 35	0K1098	1	DECAL RTS TRANSFER SW GENERAC
36	0H7274	1	DECAL NEC COMPLIANCE
37	0H7917	1	DECAL CUSTOMER CONN RTS
38	0H7270	1	CHANNEL SNAPTRACK 76.2 X 101.2
39	0L3123	1	ASSY SMART AC MOD
40	0L6699	1	NUT TRIC 1/4-20 ALUM
41	0L3246	1	WIRE HARNESS 100/200A RTS

*-SERIAL NUMBER AND FRONT DECAL PER MODEL
**-SUPPLIED WITH HARNESS ITEM #41

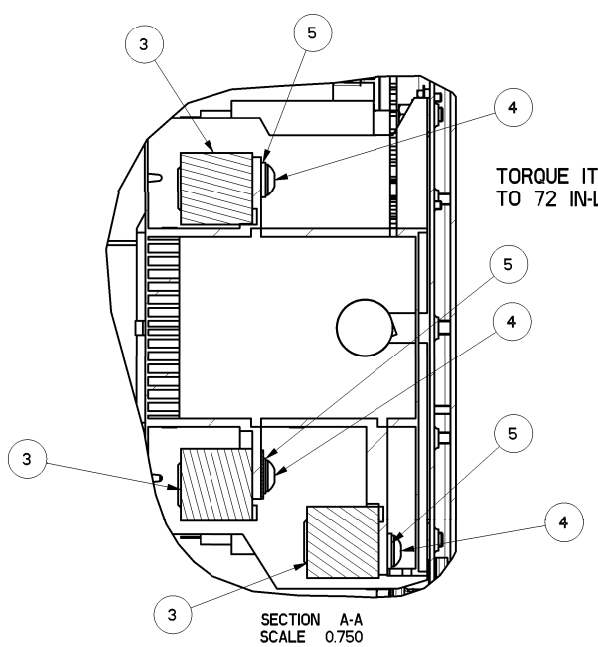

TORQUE ITEM #4
TO 72 IN-LBS

SECTION A-A
SCALE 0.750

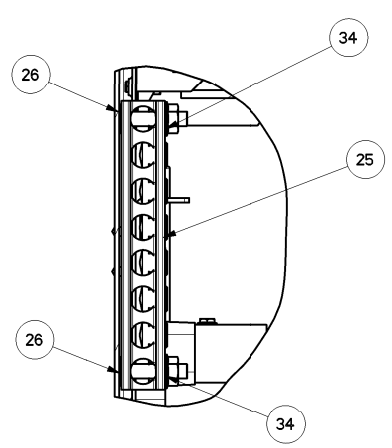

SECTION B-B
SCALE 0.600

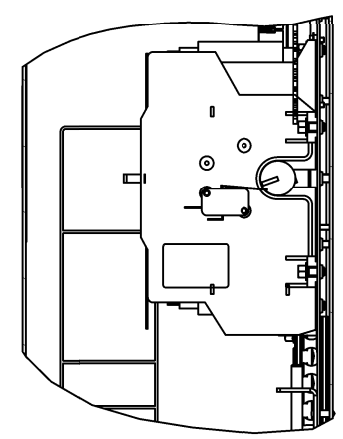

SECTION C-C

PART NUMBER	DESCRIPTION	ITEM # 18	ITEM # 35
0L3211	ASSEMBLY 200A 120/240 NON SE	0K1799B	PER MODEL
0L3211A	EXPLODED VIEW DRAWING	N/A	N/A
0L3211B	ASSEMBLY 200A 120/240 NON SE	0K1799B	0K1098
0L3211C	ASSEMBLY 200A 120/240 NON SE	0J3806B	0K1274

REFERENCE DRAWINGS

0L3241	SCHEMATIC/WIRING DIAGRAMS
0F6778	CARTON 30'5 X 14'2 X 7'8
0H7275	TEST PROC HSB XFRSW
0K0115	KIT ENCL 100/200A NON SE AL

DRAWING CREATED FROM PRO/ENGINEER 3D FILE. ECO MODIFICATION TO BE APPLIED TO SOLID MODEL ONLY.

GENERAL TOLERANCES UNLESS NOTED
ALL XX : ± 0.4 MM
XXX : ± 0.4 MM
XXXX : ± 0.15 MM
ALL ANG : ± 1°
INTERPRET DIM AND TOL PER ASME Y14.5M-1994
THIRD ANGLE PROJECTION

GENERAC POWER SYSTEMS DWG THE COPYRIGHT OF THIS DRAWING WHICH IS SUPPLIED IN CONFIDENCE AND MUST NOT BE USED FOR ANY PURPOSE OTHER THAN FOR WHICH IT IS SUPPLIED WITHOUT THE EXPRESS WRITTEN CONSENT OF GENERAC POWER SYSTEMS. © GENERAC POWER SYSTEMS 2010

ELECTRONICALLY APPROVED INSIDE WINDCHILL

GENERAC

TITLE
ASSEMBLY DWG 2-POLE 200A 120/240V

ISSUE DATE:

SIZE	CAGE NO	DWG NO	REV
D	N/A	0L3211$	C
SCALE 0.450	WT-KG 22428213.13	SHEET 1 of 1	

GENERAL ASSEMBLY DRAWING

SH 1/1 | REV D | WINDCHILL VERSION D.1

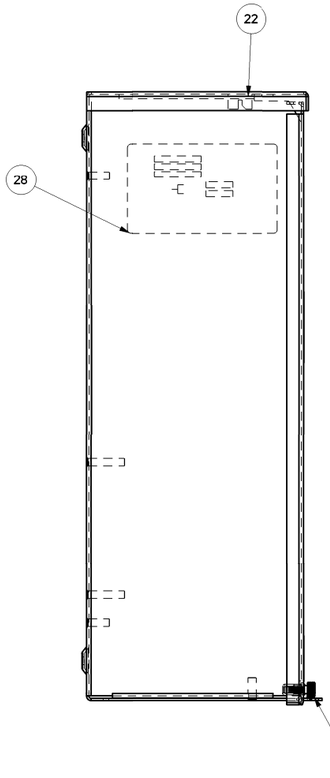

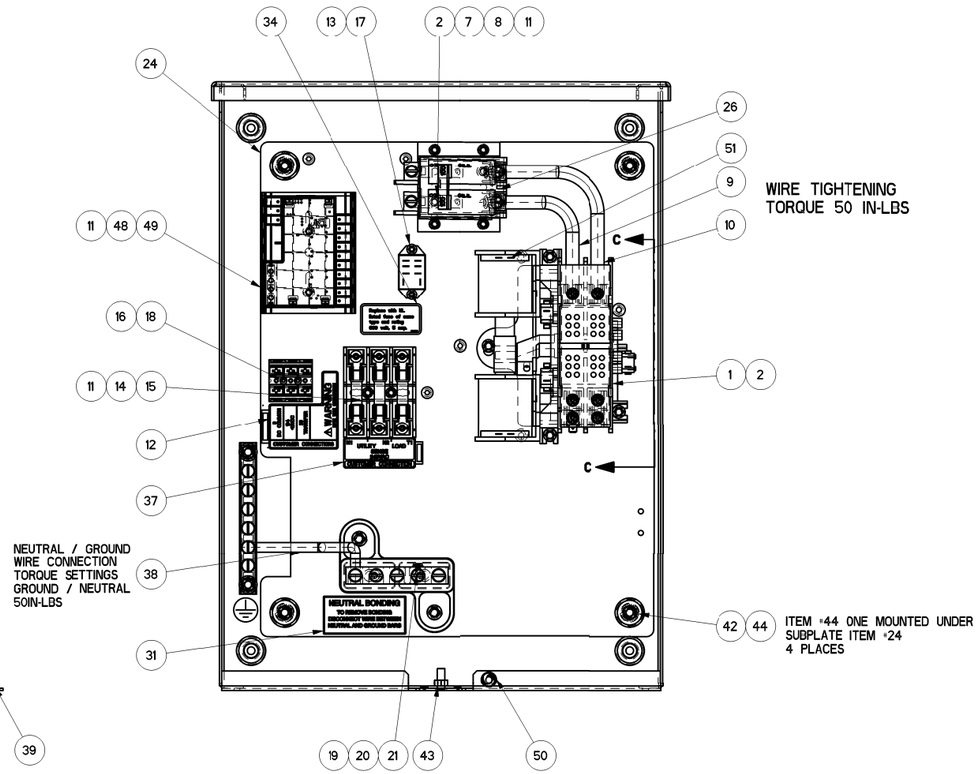

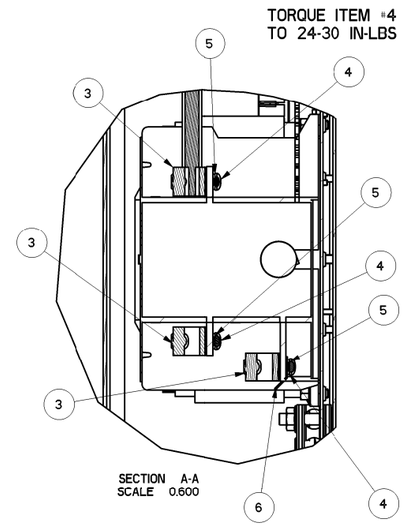

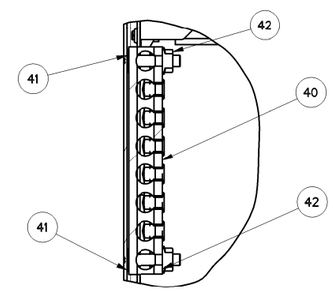

	ITEM #	PART #	QTY	DESCRIPTION
	1	0L2910	1	XFRSW HSB 100A 2P 250V
	2	074908	6	SCREW HHTT M5-0.8 X 10 BP
	3	077033	6	LUG SLDLSS 1/0-#14X9/16 AL/CU
	4	0G7624	6	SCREW PPHM #10-32 X 5/16
	5	022152	6	WASHER LOCK #10
	6	G074138	1	LUG DIS QK NI-S 10X45 DEG BR/T
	7	0E7886H	1	CB 0100A 2P 240V S B02 LB
	8	0E7890	1	BRKT CB MTG BACK
	9	0G5780A	1	ASSY WIRE 2AWG 5.375" #N1A BLK
	10	0G5780B	1	ASSY WIRE 2AWG 6.875" #N2A BLK
	11	0A1495	8	SCREW HHTT M4-0.7 X 10 BP
	12	0H7917	1	DECAL CUSTOMER CONN RTS
**	13	0K0103	1	RELAY PNL 12VDC DPDT 10A@240VA
**	14	0D2572	1	FUSEBLOCK 30A 600V 3POS W/SQ
	15	073590A	3	FUSE 5A X BUSS
**	16	0D7393T	1	TERM BLOCK 3P UL 12-20AWG
	17	0F2659	2	SCREW HHTT M3-0.5 X 6 BP
	18	0L3068	2	SCREW THTT M3-0.5 X 25 ZP
	19	0K0108	1	ASSY-NEUT BLK 100A
	20	090388	2	SCREW HHTT M6-1.0 X 12 ZINC
	21	026902	1	SCREW HHTT #8-32 X 1/4 CZ
	22	0K01120ALOR	1	ENCLOSURE 100/200A XFER SW_RAW
	23	0K01130ALOR	1	COVER 100A XFER SWITCH_INST_RAW
	24	0K0114	1	SUBPLATE,100/200A XFER SW
	25	0K11120ALOR	1	COVER INSIDE 100A SE GRAY_RAW
	26	0K1119	1	RISER 100A SERV ENT
*	27	0K1098	1	DECAL RTS TRANSFER SW GENERAC
*	28	0K1736A	1	DECAL,XFER SW SE 100A 120/240
	29	0E3484	1	DECAL WARN MANUAL OPER HANDLE
	30	0F9969	1	DECAL UTILITY DISCONNECT
	31	0K1018	1	DECAL, NEUTRAL CONNECTION
	32	0K1738	1	DECAL TEST SEQUENCE 100-200A SE
	33	0H7274	1	DECAL NEC COMPLIANCE
	34	0D3587	1	DECAL, FUSE REPLACEMENT
	35	0G3259	1	DECAL TERMINAL SHOCK HZD BI
	36	0G3274	1	DECAL LIVE CIRCUIT ENG/FRN/SPN
	37	0H6389	1	DECAL UTILITY LOAD SENSE 240V
	38	0K1167	1	WIRE NEUTRAL TO GROUND CONNECTION
	39	0L6700	1	SCREW THUMB 1/4-20 X 1/2 KNURL
	40	0J8202	1	LUG SLDLSS 2/0-#14X#10-32X.125
	41	026850	2	WASHER LOCK EXT 1/4 STL
	42	0G8411	6	NUT HEX FL WHIZ 1/4-20
	43	085889	1	NUT HEX 1/4-20 SS
	44	022473	4	WASHER FLAT 1/4-M6 ZINC
	45	0E6193	1	BRACKET, ARM EXTENDER
	46	0D6162	2	RIVET POP .156 X .362 AL
	47	0E6155	1	PIN ARM EXTENDER
	48	0L3123	1	ASSY SMART AC MOD
	49	0H7270	1	CHANNEL SNAPTRACK 76.2 X 101.2
	50	0L6699	1	NUT TRIC 1/4-20 ALUM
	51	0L3246	1	WIRE HARNESS 100/200A RTS

*-SERIAL NUMBER AND FRONT DECAL PER MODEL
**-SUPPLIED WITH HARNESS ITEM #51

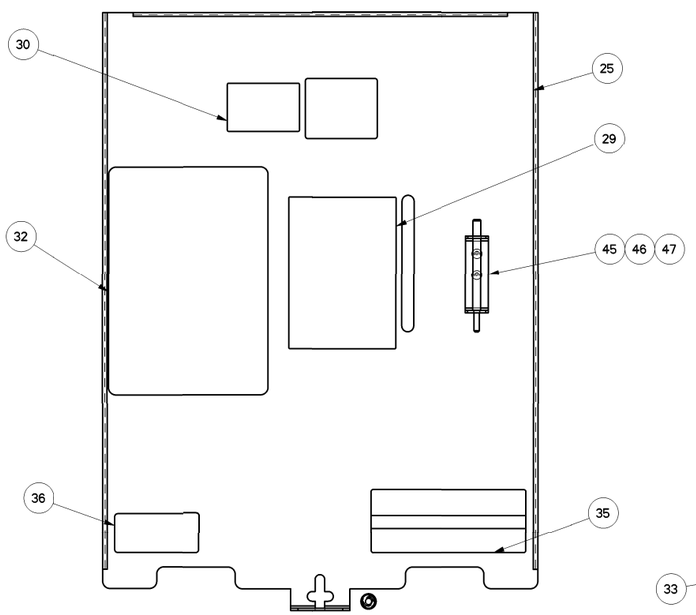

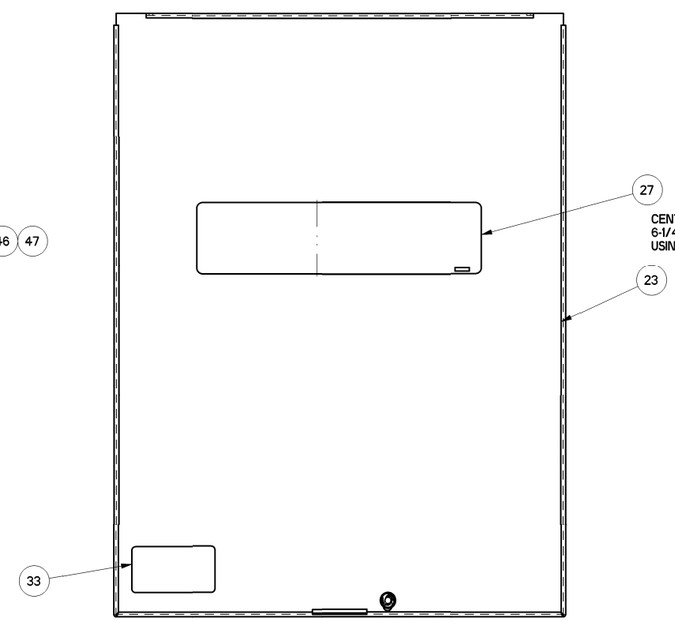

CENTER DECAL APPROXIMATELY
6-1/4" DOWN FROM TOP OF COVER
USING ASSEMBLY TEMPLATE

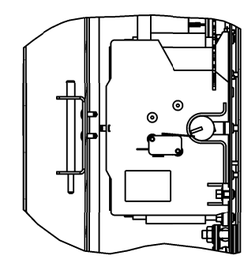

SECTION C-C

PART NUMBER	DESCRIPTION	ITEM # 28	ITEM # 27
0L3215	ASSEMBLY 100A 120/240 SE	0K1736A	PER MODEL
0L3215A	EXPLODED VIEW DRAWING	N/A	N/A
0L3215B	ASSEMBLY 200A 120/240 SE	0K1736A	0K1098
0L3215C	ASSEMBLY 200A 120/240 SE	0J3804A	0K1274

REFERENCE DRAWINGS

0L3242	SCHEMATIC/WIRING DIAGRAMS
0F6778	CARTON 30'5 X 14'2 X 7'8
0H7275	TEST PROC HSB XFRSW
0K0116	KIT ENCL 100 SE AL

DRAWING CREATED FROM PRO/ENGINEER
3D FILE. ECO MODIFICATION TO BE
APPLIED TO SOLID MODEL ONLY.

GENERAL TOLERANCES UNLESS NOTED
ALL XX : ± 0.4 MM
XXX : ± 0.4 MM
XXXX : ± 0.15 MM
ALL ANG : ± 1°
INTERPRET DIM AND TOL
PER ASME Y14.5M-1994

THIRD ANGLE PROJECTION

GENERAC

TITLE
ASSEMBLY DWG 2-POLE
100A 120/240V SE

GENERAC POWER SYSTEMS DWG THE COPYRIGHT OF THIS DRAWING WHICH IS SUPPLIED IN CONFIDENCE AND MUST NOT BE USED FOR ANY PURPOSE OTHER THAN FOR WHICH IT IS SUPPLIED WITHOUT THE EXPRESS WRITTEN CONSENT OF GENERAC POWER SYSTEMS. © GENERAC POWER SYSTEMS 2010

ELECTRONICALLY APPROVED
INSIDE WINDCHILL

ISSUE DATE:

SIZE	CAGE NO	DWG NO	REV
D	N/A	0L3215$	D
SCALE 0.400	WT-KG 22428223.72	SHEET 1 of 1	

GENERAL ASSEMBLY DRAWING

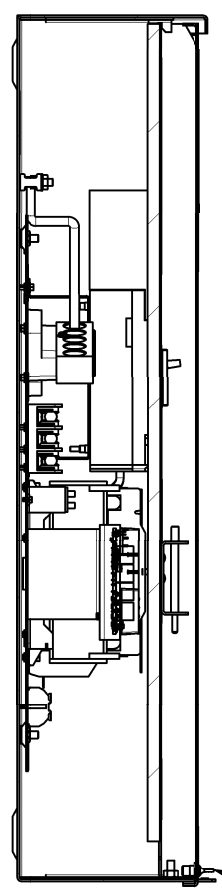

SECTION A-A

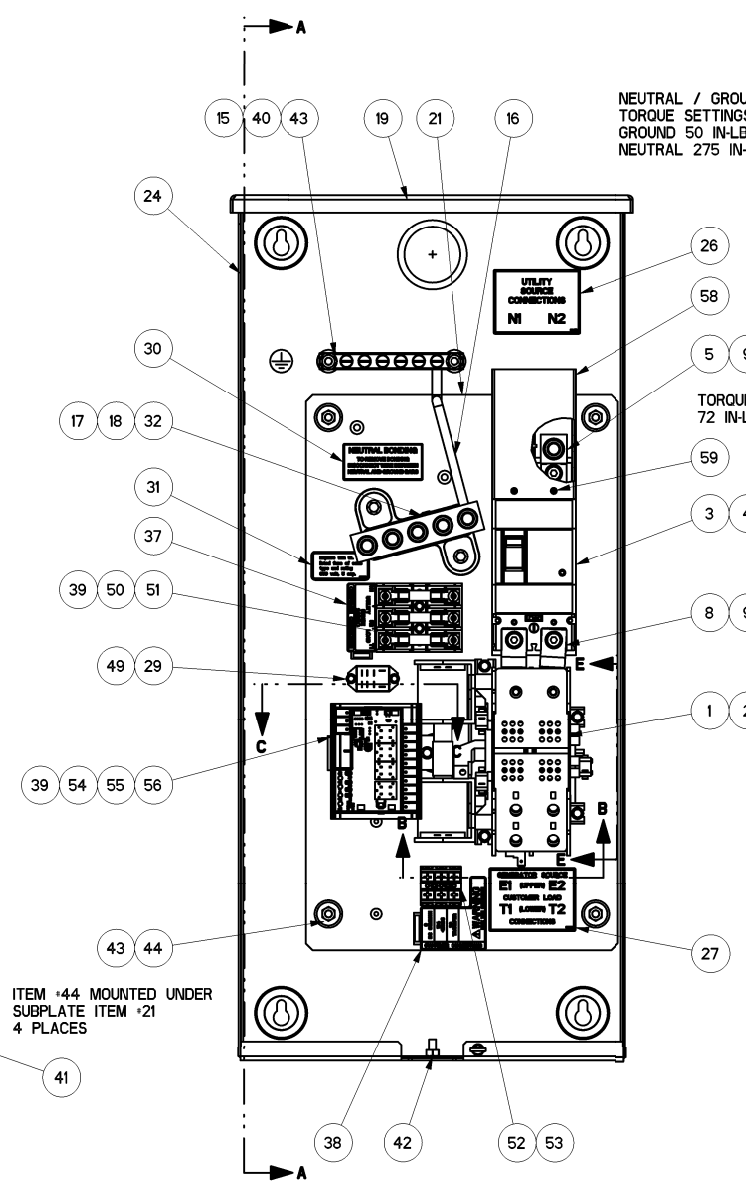

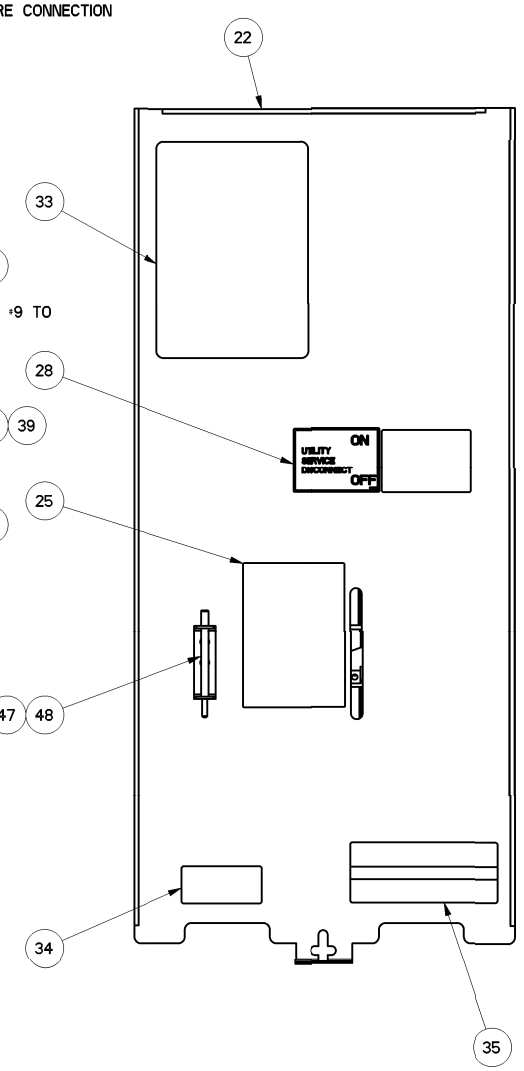

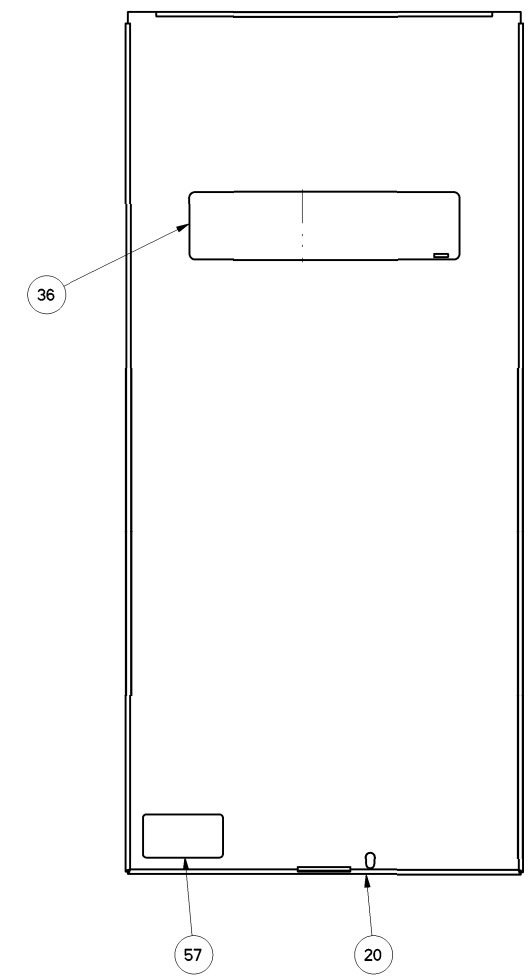

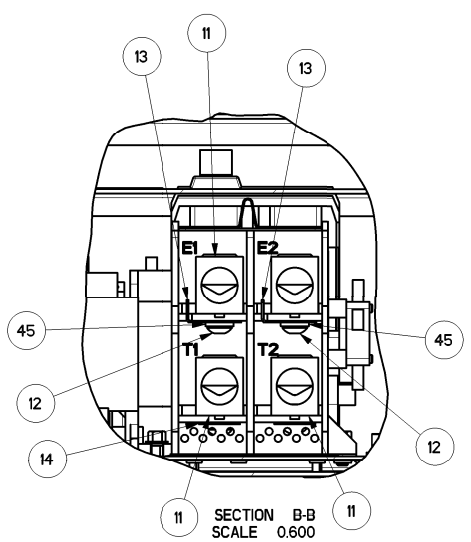

SECTION B-B
SCALE 0.600

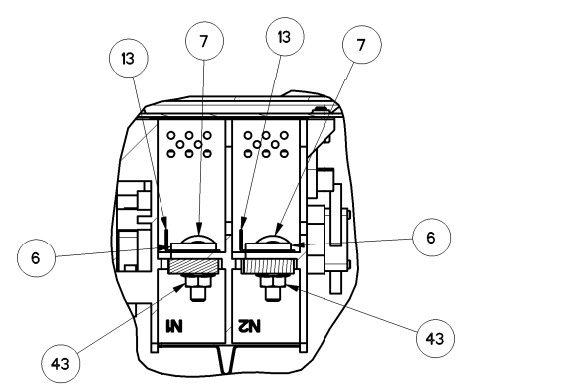

SECTION C-C
SCALE 0.600

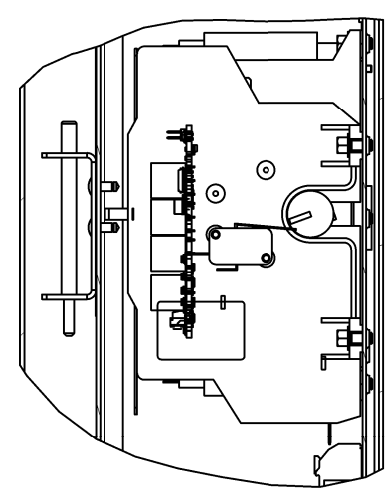

SECTION E-E
SCALE 0.600

ITEM #	PART #	QTY	DESCRIPTION
1	0L2911	1	XFRSW HSB 200A 2P 250V
2	074908	5	SCREW HHTT M5-0.8 X 10 BP
3	0K0971	1	CB 150A 2POLE 240V 225AF
4	0K0973	2	SCREW RHM #8-32 X 2-1/2
5	0H6306	2	LUG SLDLSS 350 MCM-6 AL/CU
6	0G4413	2	SPACER,200 AMP TRANSFER SWITCH
7	024334	2	BOLT CARR 1/4-20 X 1
8	0K0130	2	BUSBAR 200A TRANSFER SW N1,N2
9	049897	4	SCREW SHC M8-1.25 X 20 G8
10	022129	4	WASHER LOCK M8-5/16
11	0E3375	4	LUG SLDLSS 250-#6 AL/CU
12	0F1252	4	SCREW BHSC 1/4-20 X 3/8
13	0E6033	4	90 DEGREE DN SPADE CONNECTOR
14	0E6034	1	STRAIGHT SPADE CONNECTOR
15	0J8202	1	LUG SLDLSS 2/0-#14X#10-32X.125
16	0K1081	1	WIRE NEUTRAL/GND CONNECTION
17	0K0108A	1	ASSY-NEUT BLK 200A W/TAP
18	090388	2	SCREW HHTT M6-1.0 X 12 ZINC
19	0K01170AL0R	1	ENCLOSURE 200A SE XFRSW RAW
20	0K01180AL0R	1	COVER,200A SE XFRSW RAW
21	0K0119	1	SUBPLATE,200A SE XFER SW
22	0K01310AL0R	1	COVER INSIDE 200A SE XFER SW RAW
23	0K0132	1	CB RISER BRACKET 200A GENERAC
* 24	0K1736B	1	DECAL,XFER SW SE 150A 120/240
25	0L3484	1	DECAL WARN MANUAL OPER HANDLE
26	0G9651A	1	DECALS, SERVICE ENTRANCE
27	0G9651B	1	DECALS, SERVICE ENTRANCE
28	0G9651C	1	DECALS, SERVICE ENTRANCE
29	0F2659	2	SCREW HHTT M3-0.5 X 6 BP
30	0K1018	1	DECAL, NEUTRAL CONNECTION
31	0D3587	1	DECAL, FUSE REPLACEMENT
32	026902	1	SCREW HHTT #8-32 X 1/4 CZ
33	0K1738	1	DECAL TEST SEQUENCE 100-200A SE
34	0G3274	1	DECAL LIVE CIRCUIT ENG/FRN/SPN
35	0G3259	1	DECAL TERMINAL SHOCK HZD BI
* 36	0K1098	1	DECAL RTS TRANSFER SW GENERAC
37	0H6389	1	DECAL UTILITY LOAD SENSE 240V
38	0H7917	1	DECAL CUSTOMER CONN RTS
39	0A1495	8	SCREW HHTT M4-0.7 X 10 BP
40	026850	2	WASHER LOCK EXT 1/4 STL
41	0E7213	1	SCREW THUMB 1/4-20 X1/2 W/SHLD
42	085889	1	NUT HEX 1/4-20 SS
43	0G8411	8	NUT HEX FL WHIZ 1/4-20
44	022473	4	WASHER FLAT 1/4-M6 ZINC
45	022097	4	WASHER LOCK M6-1/4
46	0E6193	1	BRACKET, ARM EXTENDER
47	0D6162	2	RIVET POP .156 X .362 AL
48	0E6155	1	PIN ARM EXTENDER
** 49	0K0103	1	RELAY PNL 12VDC DPDT 10A@240VA
** 50	0D2572	1	FUSEBLOCK 30A 600V 3POS W/SQ
51	073590A	3	FUSE 5A X BUSS
** 52	0D7393T	1	TERM BLOCK 3P UL 12-20AWG
53	0L3068	2	SCREW THTT M3-0.5 X 25 ZP
54	0H7190	1	BRACKET LOAD SHED 200A RTS
55	0L3123	1	ASSY SMART AC MOD
56	0H7270	1	CHANNEL SNAPTRACK 76.2 X 101.2
57	0H7274	1	DECAL NEC COMPLIANCE
58	0K8414	1	CB TERMINAL COVER 2 POLE 240V
59	0K8628	2	SCREW PFH 4-24 X 5/16 TCS
60	064761	4	TIE WRAP UL 5.6 X .10 NATL
61	0L3247	1	HARNESS 200A SE SACM

*-SERIAL NUMBER AND FRONT DECAL PER MODEL
**-SUPPLIED WITH HARNESS ITEM #61

PART NUMBER	DESCRIPTION	ITEM # 24	ITEM # 36
0L3216	ASSEMBLY 150A SERVICE ENTR GEN	0K1736B	PER MODEL
0L3216A	EXPLODED VIEW DRAWING	N/A	N/A
0L3216B	ASSEMBLY 150A SERVICE ENTR GEN	0K1736B	0K1098
0L3216C	ASSEMBLY 150A SERVICE ENTR HNYWL	CJ3804B	0K1274

REFERENCE DRAWINGS

0L3242 SCHEMATIC/WIRING DIAGRAMS
0K1846 CARTON 30'5 X 14'2 X 7
0H7275 TEST PROC HSB XFRSW
0K0120 KIT, ENCL 200A SE AL GENERAC

DRAWING CREATED FROM PRO/ENGINEER 3D FILE. ECO MODIFICATION TO BE APPLIED TO SOLID MODEL ONLY.

GENERAL TOLERANCES UNLESS NOTED
ALL XX : ± 0.4 MM
XXX : ± 0.4 MM
XXXX : ± 0.15 MM
ALL ANG : ± 1°
INTERPRET DIM AND TOL PER ASME Y14.5M-1994
THIRD ANGLE PROJECTION

GENERAC POWER SYSTEMS OWNS THE COPYRIGHT OF THIS DRAWING. THIS DRAWING OR ANY PART THEREOF MUST NOT BE USED FOR ANY PURPOSE OTHER THAN WHICH IT IS SUPPLIED WITHOUT THE EXPRESS WRITTEN CONSENT OF GENERAC POWER SYSTEMS.
© GENERAC POWER SYSTEMS 2010

ELECTRONICALLY APPROVED
INSIDE WINDCHILL

GENERAC

TITLE
ASSEMBLY 150A SERVICE ENTRANCE GENERAC CB

ISSUE DATE:

SIZE	CAGE NO	DWG NO	REV
D	N/A	0L3216$	B

SCALE 0.300 WT-KG 306457478.68 SHEET 1 of 1

GENERAL ASSEMBLY DRAWING

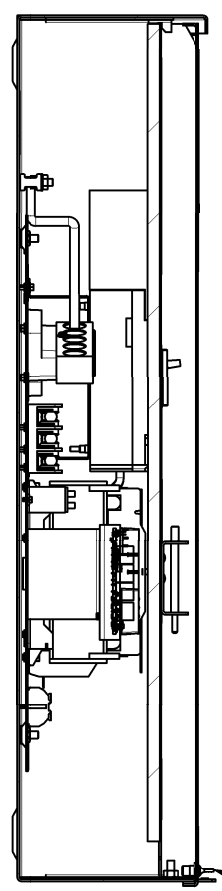

SECTION A-A

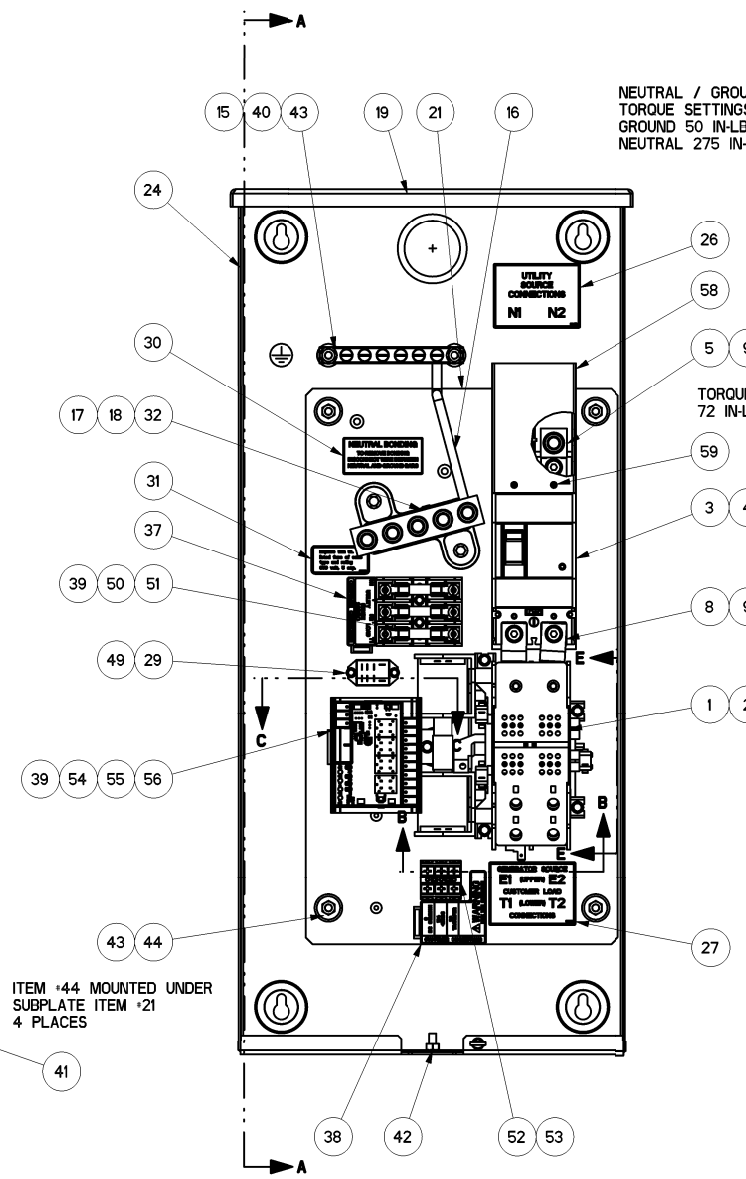

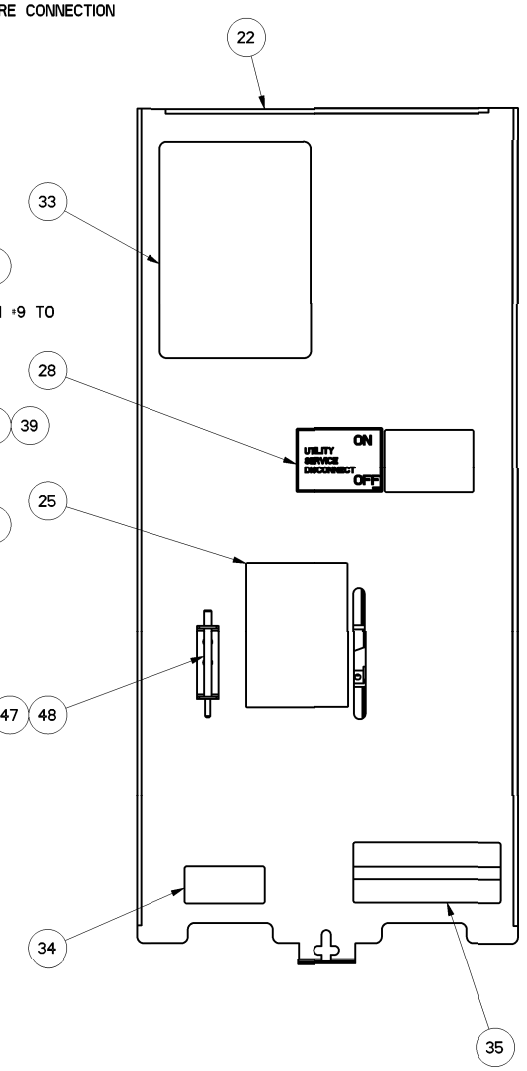

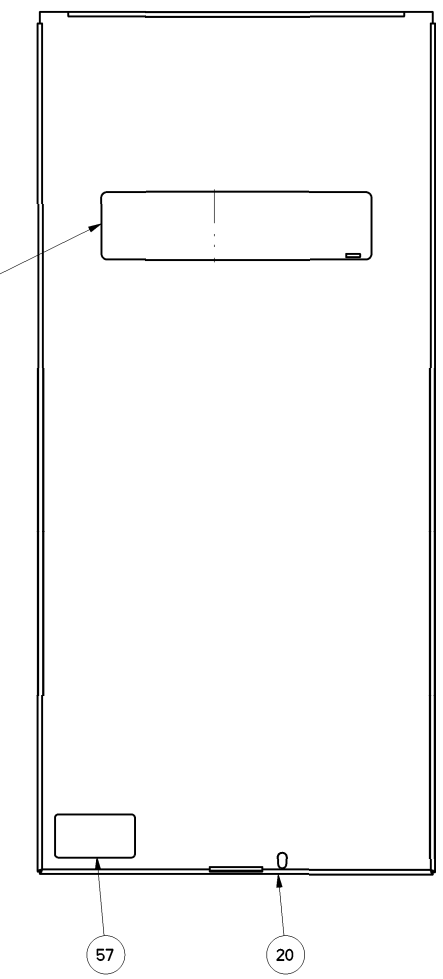

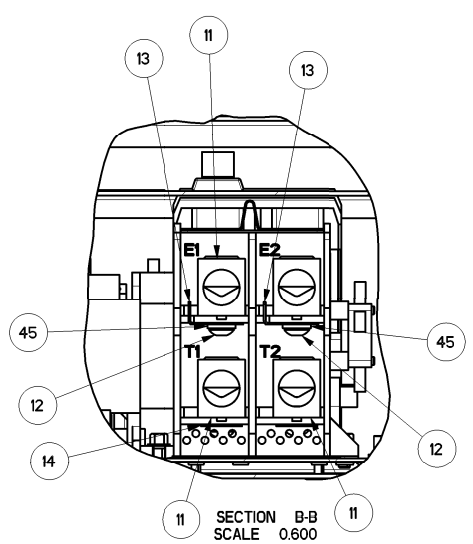

SECTION B-B
SCALE 0.600

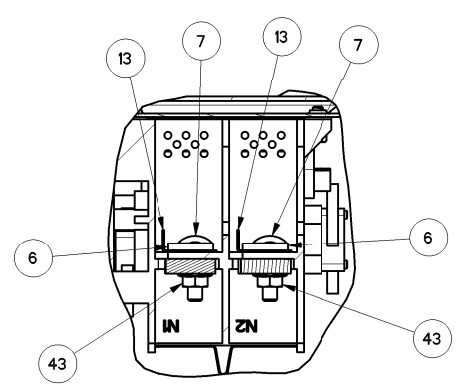

SECTION C-C
SCALE 0.600

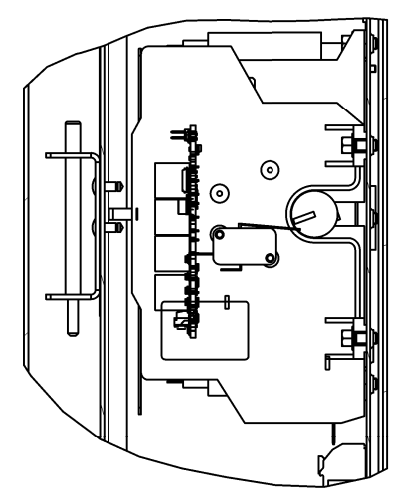

SECTION E-E
SCALE 0.600

ITEM #	PART #	QTY	DESCRIPTION
1	0L2911	1	XFRSW HSB 200A 2P 250V
2	074908	5	SCREW HHTT M5-0.8 X 10 BP
3	0K0133	1	CB 200A 2POLE 240V 225AF
4	0K0973	2	SCREW RHM #8-32 X 2-1/2
5	0H6306	2	LUG SLDLSS 350 MCM-6 AL/CU
6	0G4413	2	SPACER,200 AMP TRANSFER SWITCH
7	024334	2	BOLT CARR 1/4-20 X 1
8	0K0130	2	BUSBAR 200A TRANSFER SW N1,N2
9	049897	4	SCREW SHC M8-1.25 X 20 G8
10	022129	4	WASHER LOCK M8-5/16
11	0E3375	4	LUG SLDLSS 250-#6 AL/CU
12	0F1252	4	SCREW BHSC 1/4-20 X 3/8
13	0E6033	4	90 DEGREE DN SPADE CONNECTOR
14	0E6034	1	STRAIGHT SPADE CONNECTOR
15	0J8202	1	LUG SLDLSS 2/0-#14X#10-32X.125
16	0K1081	1	WIRE NEUTRAL/GND CONNECTION
17	0K0108A	1	ASSY-NEUT BLK 200A W/TAP
18	090388	2	SCREW HHTT M6-1.0 X 12 ZINC
19	0K01170AL0R	1	ENCLOSURE 200A SE XFRSW RAW
20	0K01180AL0R	1	COVER,200A SE XFRSW RAW
21	0K0119	1	SUBPLATE,200A SE XFER SW
22	0K01310AL0R	1	COVER INSIDE 200A SE XFER SW RAW
23	0K0132	1	CB RISER BRACKET 200A GENERAC
* 24	0K1736C	1	DECAL,XFER SW SE 200A 120/240
25	0L3484	1	DECAL WARN MANUAL OPER HANDLE
26	0G9651A	1	DECALS, SERVICE ENTRANCE
27	0G9651B	1	DECALS, SERVICE ENTRANCE
28	0G9651C	1	DECALS, SERVICE ENTRANCE
29	0F2659	2	SCREW HHTT M3-0.5 X 6 BP
30	0K1018	1	DECAL, NEUTRAL CONNECTION
31	0D3587	1	DECAL, FUSE REPLACEMENT
32	026902	1	SCREW HHTT #8-32 X 1/4 CZ
33	0K1738	1	DECAL TEST SEQUENCE 100-200A SE
34	0G3274	1	DECAL LIVE CIRCUIT ENG/FRN/SPN
35	0G3259	1	DECAL TERMINAL SHOCK HZD BI
* 36	0K1098	1	DECAL RTS TRANSFER SW GENERAC
37	0H6389	1	DECAL UTILITY LOAD SENSE 240V
38	0H7917	1	DECAL CUSTOMER CONN RTS
39	0A1495	8	SCREW HHTT M4-0.7 X 10 BP
40	026850	2	WASHER LOCK EXT 1/4 STL
41	0E7213	1	SCREW THUMB 1/4-20 X1/2 W/SHLD
42	085889	1	NUT HEX 1/4-20 SS
43	0G8411	8	NUT HEX FL WHIZ 1/4-20
44	022473	4	WASHER FLAT 1/4-M6 ZINC
45	022097	4	WASHER LOCK M6-1/4
46	0E6193	1	BRACKET, ARM EXTENDER
47	0D6162	2	RIVET POP .156 X .362 AL
48	0E6155	1	PIN ARM EXTENDER
** 49	0K0103	1	RELAY PNL 12VDC DPDT 10A@240VA
** 50	0D2572	1	FUSEBLOCK 30A 600V 3POS W/SQ
51	073590A	3	FUSE 5A X BUSS
** 52	0D7393T	1	TERM BLOCK 3P UL 12-20AWG
53	0L3068	2	SCREW THTT M3-0.5 X 25 ZP
54	0H7190	1	BRACKET LOAD SHED 200A RTS
55	0L3123	1	ASSY SMART AC MOD
56	0H7270	1	CHANNEL SNAPTRACK 76.2 X 101.2
57	0H7274	1	DECAL NEC COMPLIANCE
58	0K8414	1	CB TERMINAL COVER 2 POLE 240V
59	0K8628	2	SCREW PFH 4-24 X 5/16 TCS
60	064761	4	TIE WRAP UL 5.6 X .10 NATL
61	0L3247	1	HARNESS 200A SE SACM

*-SERIAL NUMBER AND FRONT DECAL PER MODEL
**-SUPPLIED WITH HARNESS ITEM #61

PART NUMBER	DESCRIPTION	ITEM # 24	ITEM # 36
0L3217	ASSEMBLY 200A SERVICE ENTR GEN	0K1736C	PER MODEL
0L3217A	EXPLODED VIEW DRAWING	N/A	N/A
0L3217B	ASSEMBLY 200A SERVICE ENTR GEN	0K1736C	0K1098
0L3217C	ASSEMBLY 200A SERVICE ENTR HNYWL	0J3804C	0K1274
0L3217D	ASSEMBLY 200A SERVICE ENTR HNYWL	0J3804C	0K1274

REFERENCE DRAWINGS

0L3242 SCHEMATIC/WIRING DIAGRAMS
0K1846 CARTON 30'5 X 14'2 X 7
0H7275 TEST PROC HSB XFRSW
0K0120 KIT, ENCL 200A SE AL GENERAC

DRAWING CREATED FROM PRO/ENGINEER 3D FILE. ECO MODIFICATION TO BE APPLIED TO SOLID MODEL ONLY.

GENERAL TOLERANCES UNLESS NOTED
ALL XX : ± 0.4 MM
XXX : ± 0.4 MM
XXXX : ± 0.15 MM
ALL ANG : ± 1°
INTERPRET DIM AND TOL PER ASME Y14.5M-1994
THIRD ANGLE PROJECTION

GENERAC POWER SYSTEMS OWNS THE COPYRIGHT OF THIS DRAWING. THIS DRAWING OR ANY PART THEREOF MUST NOT BE USED FOR ANY PURPOSE OTHER THAN WHICH IT IS SUPPLIED WITHOUT THE EXPRESS WRITTEN CONSENT OF GENERAC POWER SYSTEMS.
© GENERAC POWER SYSTEMS 2010

ELECTRONICALLY APPROVED
INSIDE WINDCHILL

GENERAC

TITLE
ASSEMBLY 200A SERVICE ENTRANCE GENERAC CB

ISSUE DATE:

SIZE	CAGE NO	DWG NO	REV
D	N/A	0L3217$	C

SCALE 0.300 WT-KG 306457478.68 SHEET 1 of 1

GENERAL ASSEMBLY DRAWING

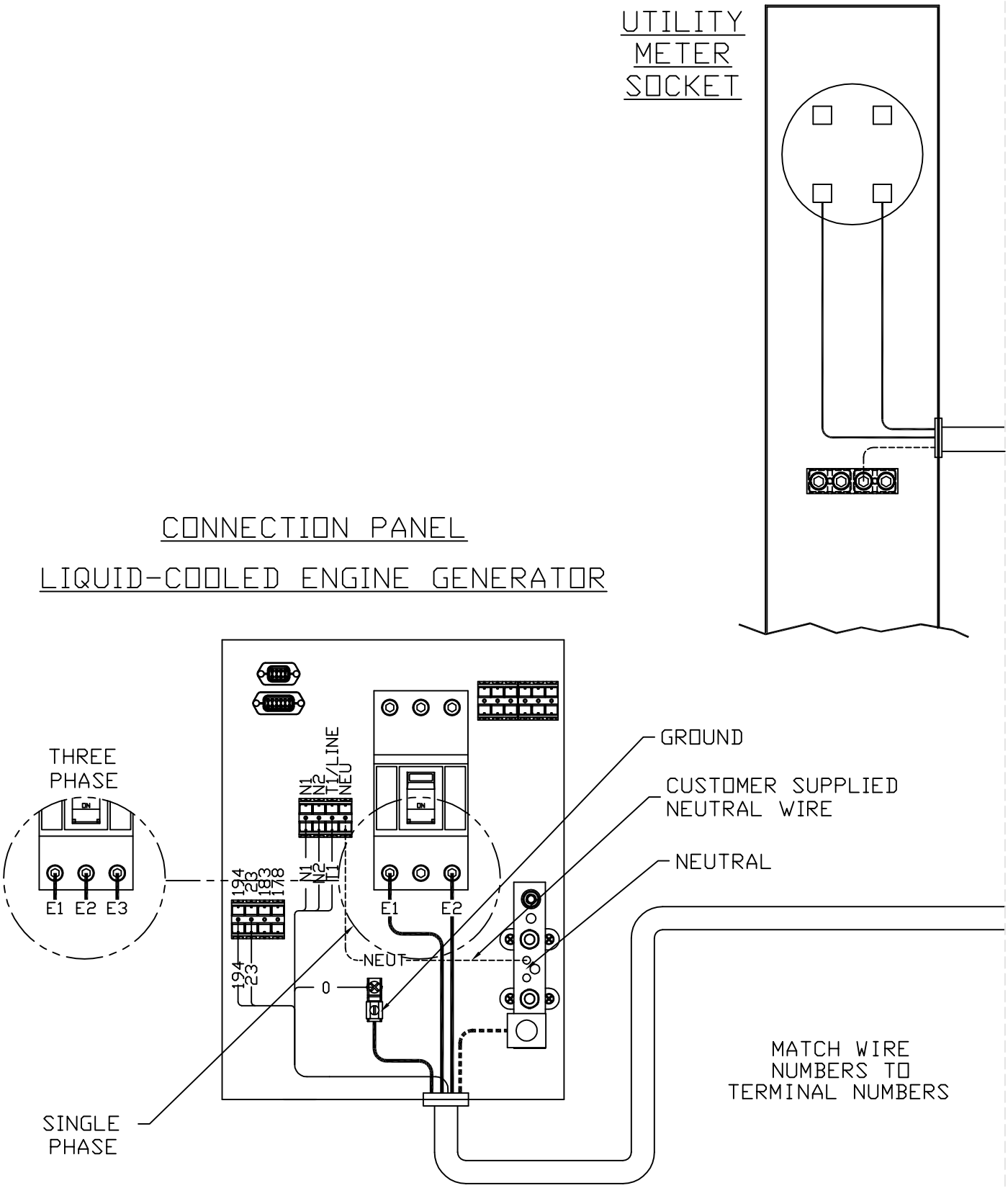

INTERCONNECTION DRAWING

SE/NSE W/SMART AC MODULE

REVISION: "A"

DATE: 03/30/15

DRAWING #: 0L3240

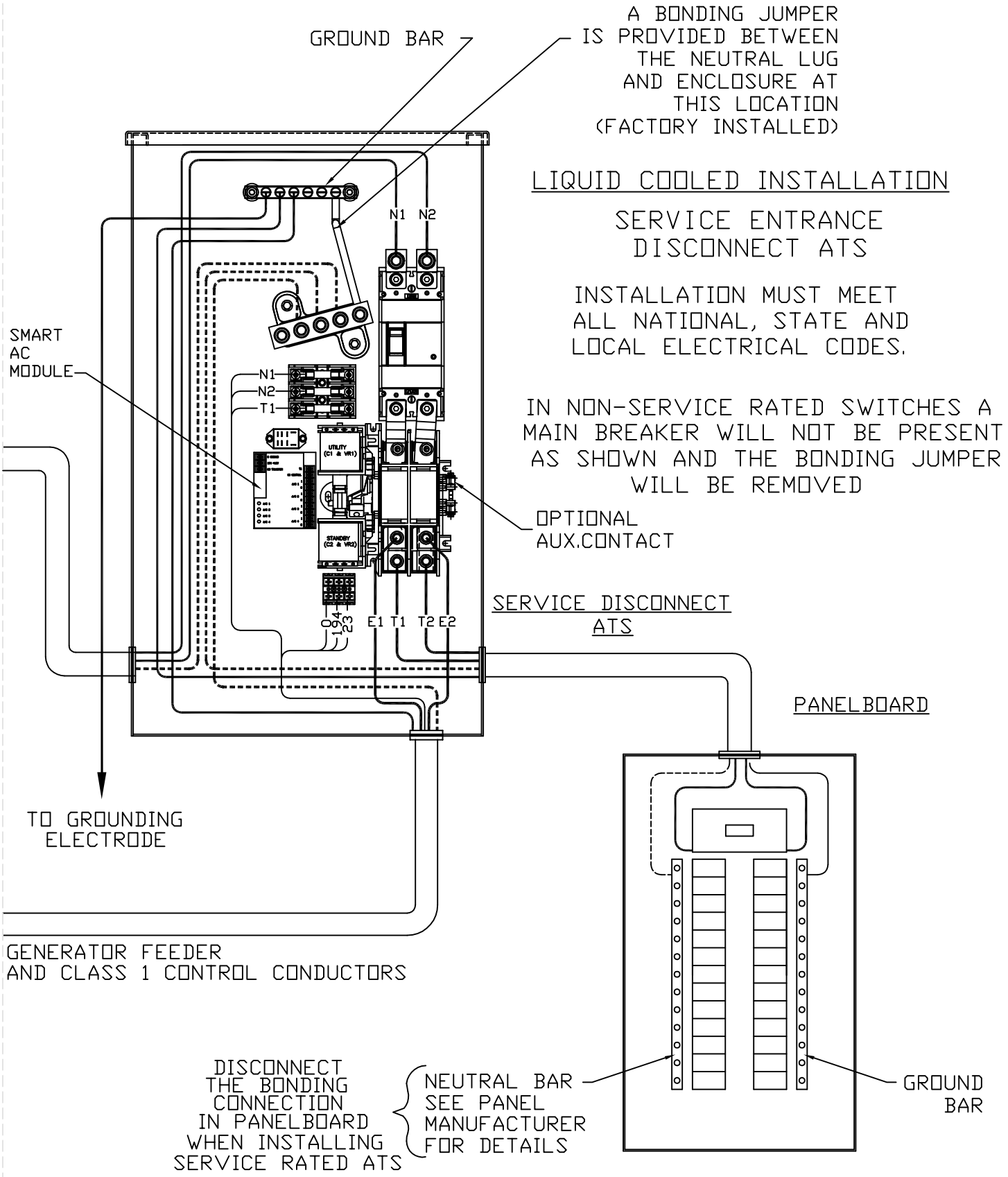

INTERCONNECTION DRAWING

SE/NSE W/SMART AC MODULE

REVISION: "A"

DATE: 03/30/15

DRAWING #: 0L3240

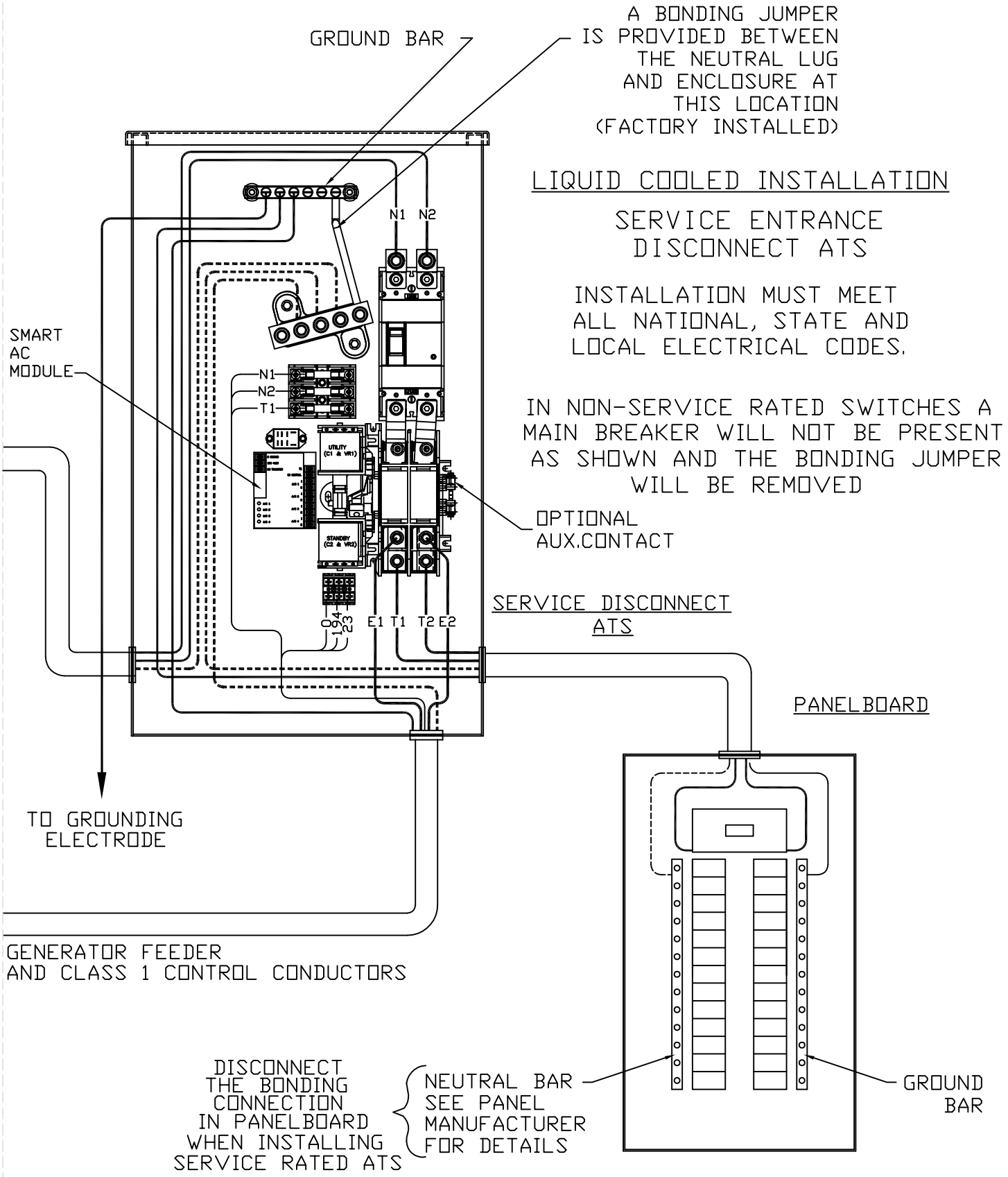

INTERCONNECTION DRAWING

SE/NSE W/SMART AC MODULE

REVISION: "A"

DATE: 03/30/15

DRAWING #: 0L3240

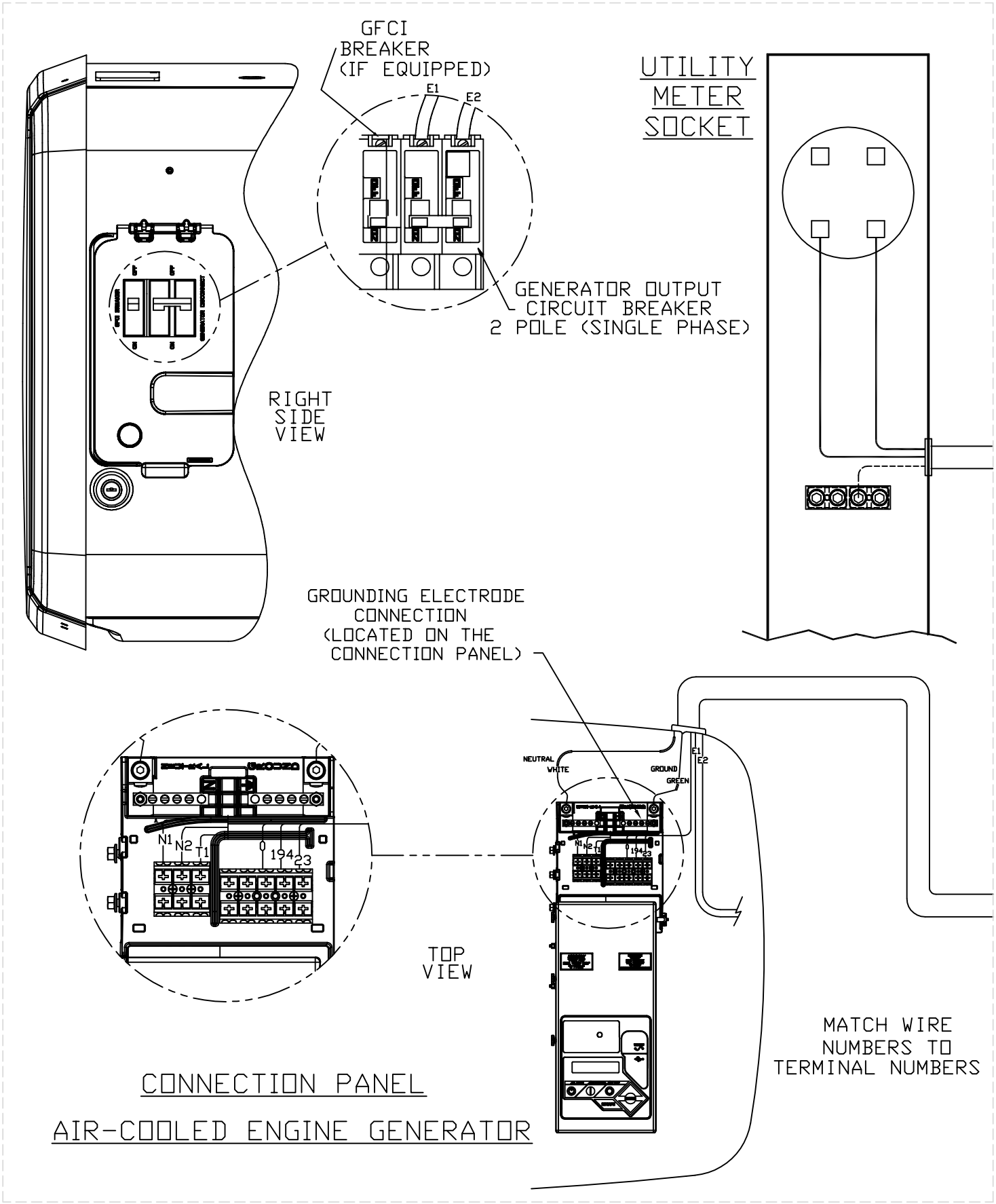

INTERCONNECTION DRAWING

SE/NSE W/SMART AC MODULE

DRAWING #: 0L3240

REVISION: "A"

DATE: 03/30/15

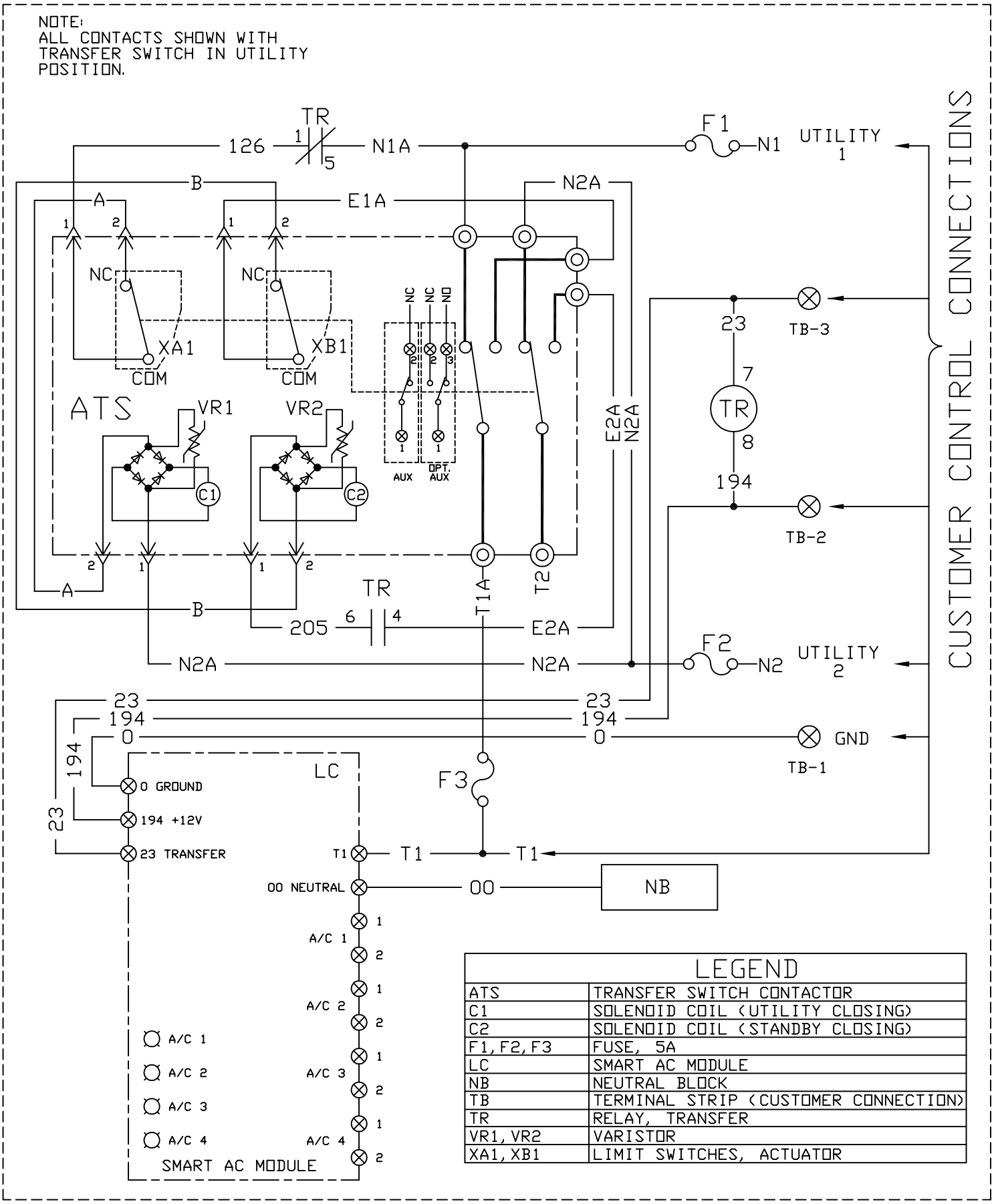

LEGEND	
ATS	TRANSFER SWITCH CONTACTOR
C1	SOLENOID COIL (UTILITY CLOSING)
C2	SOLENOID COIL (STANDBY CLOSING)
F1, F2, F3	FUSE, 5A
LC	SMART AC MODULE
NB	NEUTRAL BLOCK
TB	TERMINAL STRIP (CUSTOMER CONNECTION)
TR	RELAY, TRANSFER
VR1, VR2	VARISTOR
XA1, XB1	LIMIT SWITCHES, ACTUATOR

SCHEMATIC - DIAGRAM
XFER SW. W/ SMART AC MOD.
DRAWING #: 0L3241

REVISION: "A"
DATE: 03/30/15

GROUP G

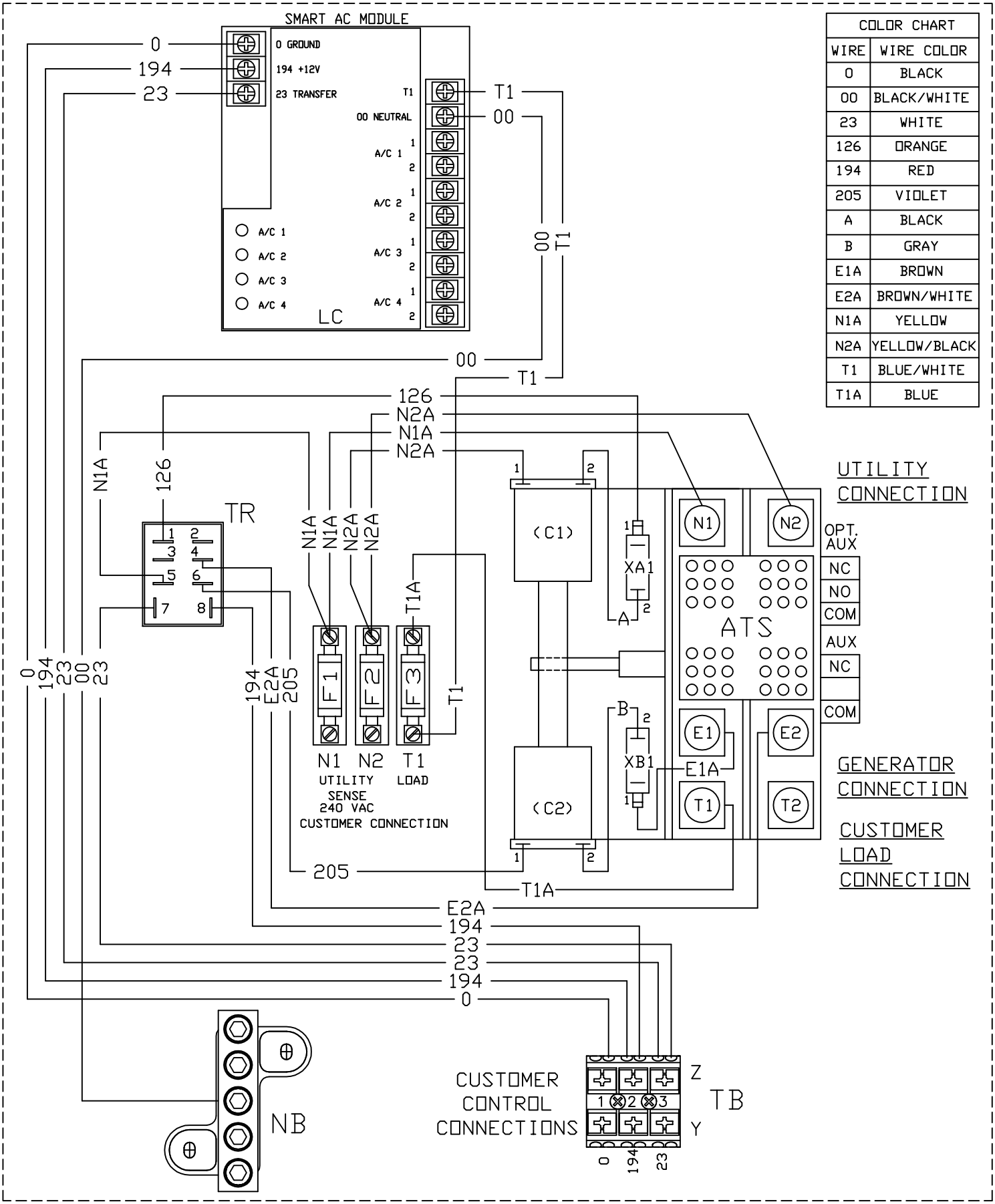

COLOR CHART	
WIRE	WIRE COLOR
0	BLACK
00	BLACK/WHITE
23	WHITE
126	ORANGE
194	RED
205	VIOLET
A	BLACK
B	GRAY
E1A	BROWN
E2A	BROWN/WHITE
N1A	YELLOW
N2A	YELLOW/BLACK
T1	BLUE/WHITE
T1A	BLUE

WIRING - DIAGRAM

XFER SW. W/ SMART AC MOD.

DRAWING #: 0L3241

REVISION: "A"

DATE: 03/30/15

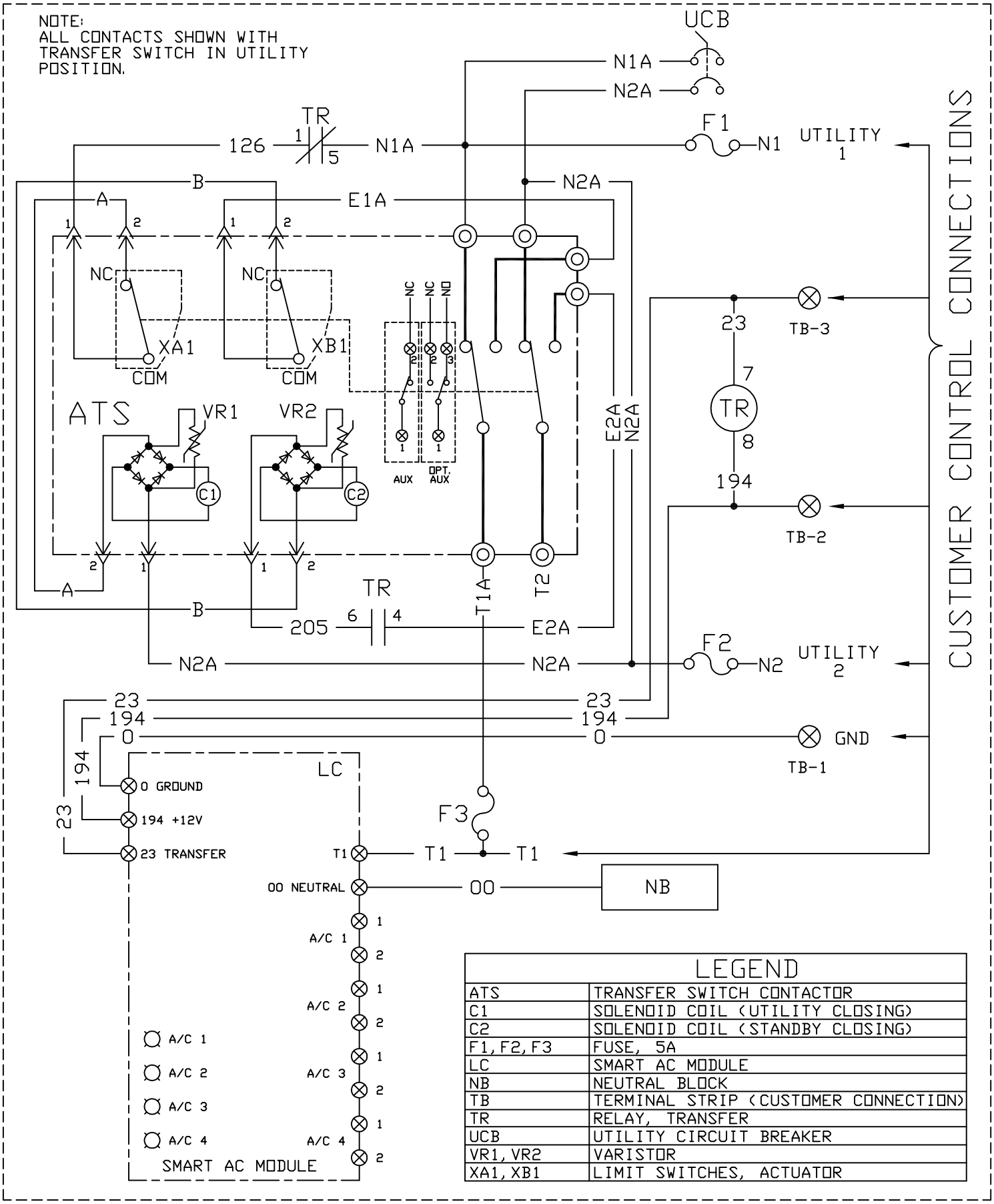

LEGEND	
ATS	TRANSFER SWITCH CONTACTOR
C1	SOLENOID COIL (UTILITY CLOSING)
C2	SOLENOID COIL (STANDBY CLOSING)
F1, F2, F3	FUSE, 5A
LC	SMART AC MODULE
NB	NEUTRAL BLOCK
TB	TERMINAL STRIP (CUSTOMER CONNECTION)
TR	RELAY, TRANSFER
UCB	UTILITY CIRCUIT BREAKER
VR1, VR2	VARISTOR
XA1, XB1	LIMIT SWITCHES, ACTUATOR

SCHEMATIC - DIAGRAM
XFER SW W/SMART AC MOD.
DRAWING #: OL3242

REVISION: "A"
DATE: 03/30/15

GROUP G

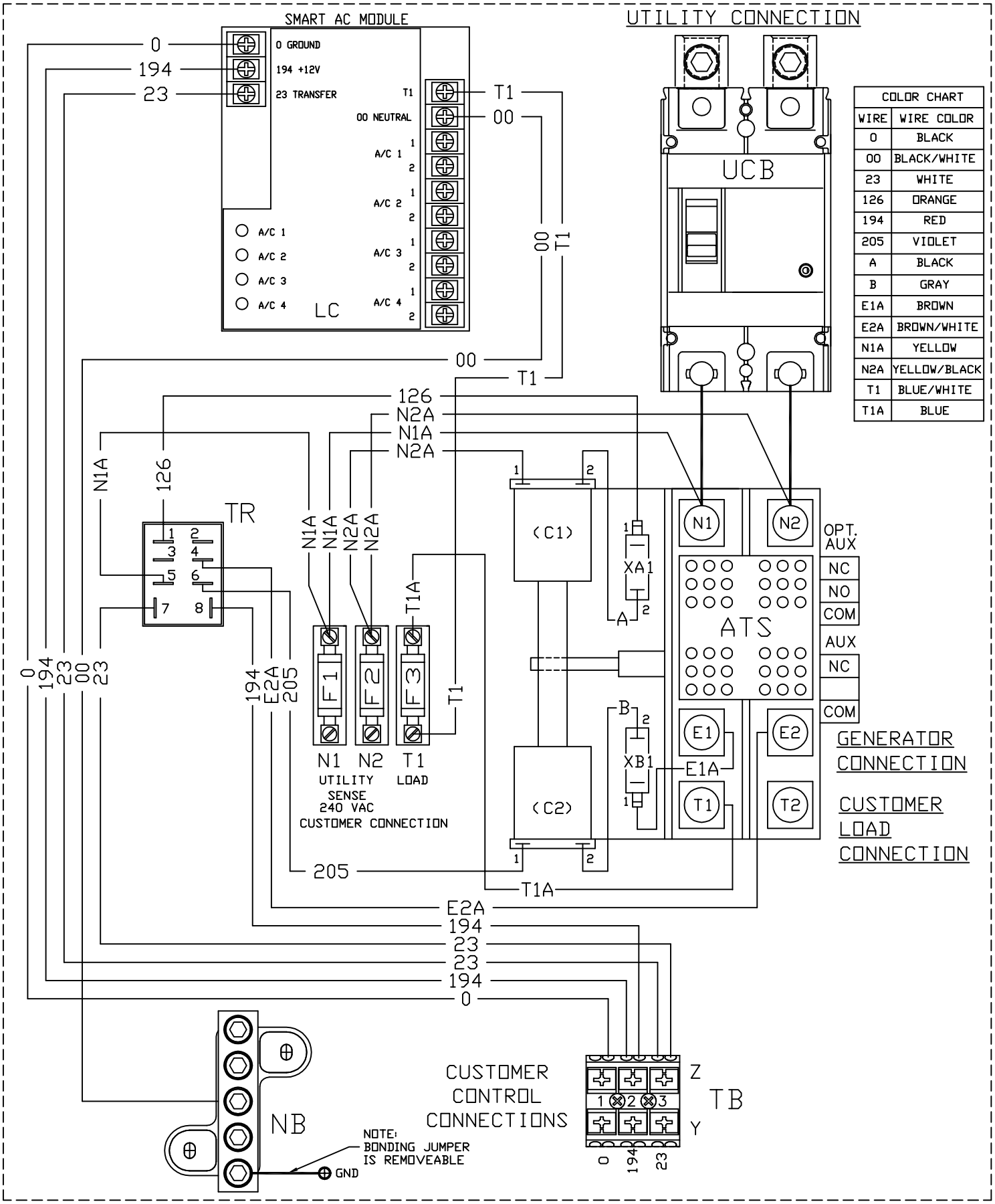

COLOR CHART	
WIRE	WIRE COLOR
0	BLACK
00	BLACK/WHITE
23	WHITE
126	ORANGE
194	RED
205	VIOLET
A	BLACK
B	GRAY
E1A	BROWN
E2A	BROWN/WHITE
N1A	YELLOW
N2A	YELLOW/BLACK
T1	BLUE/WHITE
T1A	BLUE

WIRING - DIAGRAM

XFER SW W/SMART AC MOD.

DRAWING #: 0L3242

REVISION: "A"

DATE: 03/30/15

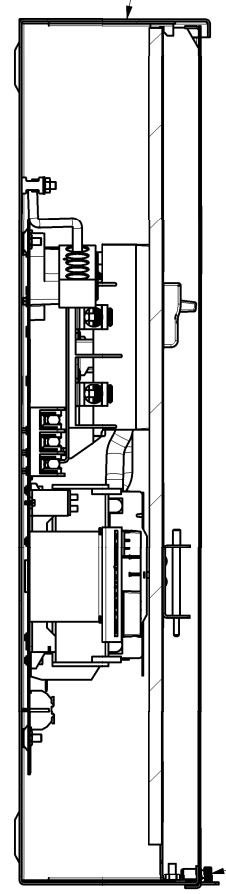

SECTION A-A

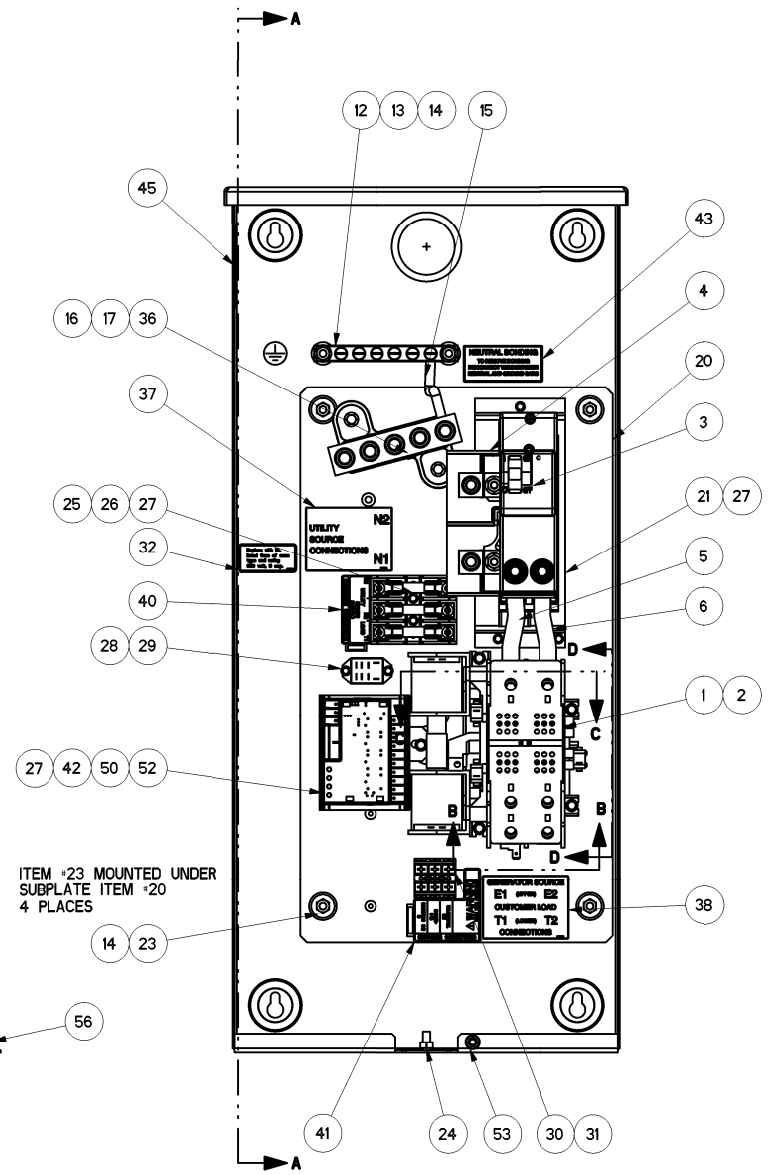

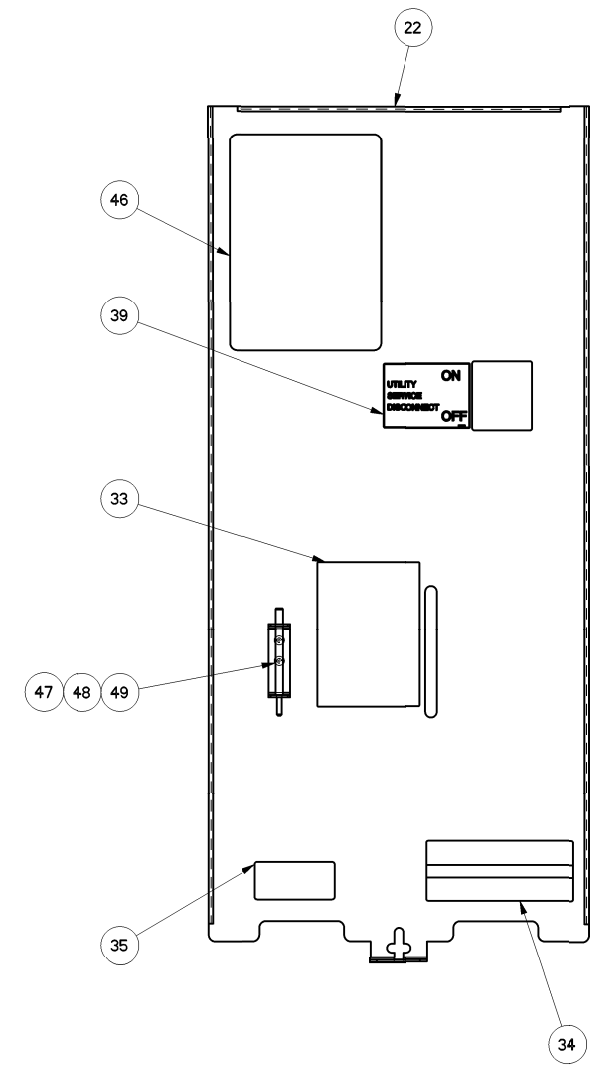

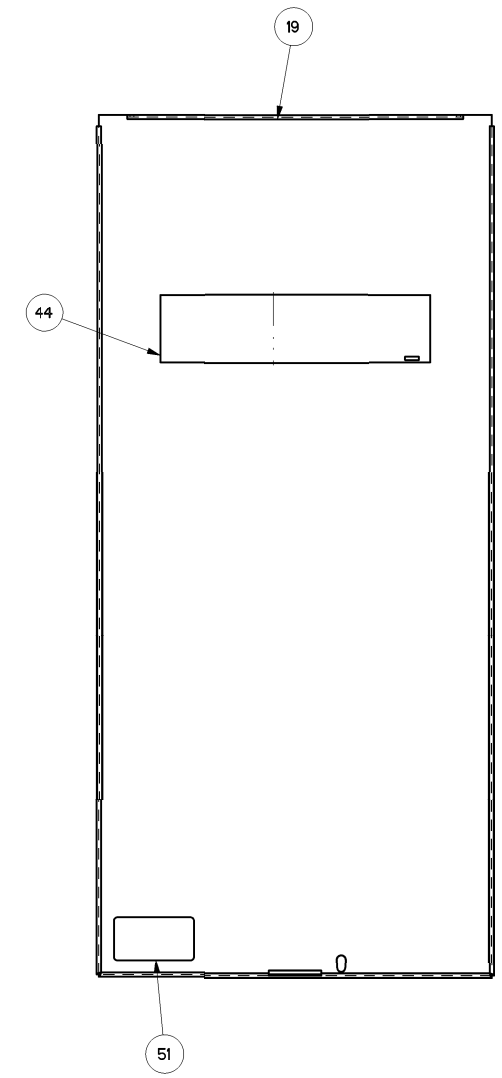

ITEM #	PART #	QTY	DESCRIPTION
1	0L2911	1	XFRSW HSB 200A 2P 250V
2	074908	5	SCREW HHTT M5-0.8 X 10 BP
3	0E3628	1	CB 0200A 2P 240V S QN2 LL
4	0E3664	1	BASE, QN CIRCUIT BREAKER
5	036918	2	SCREW PPHM #8-32 X 1/2
6	0G9299	2	WIRE 3/0 N1,N2
7	0E3375	6	LUG SLDLSS 250-#6 AL/CU
8	0F1252	6	SCREW BHSC 1/4-20 X 3/8
9	G022097	6	WASHER LOCK M6-1/4
10	0E6033	4	90 DEGREE DN SPADE CONNECTOR
11	0E6034	1	STRAIGHT SPADE CONNECTOR
12	0J8202	1	LUG SLDLSS 2/0-#14X#10-32X.125
13	026850	2	WASHER LOCK EXT 1/4 STL
14	0G8411	6	NUT HEX FL WHIZ 1/4-20
15	0K1914	1	WIRE NEUTRAL CONNECTION SIE
16	0K0108A	1	ASSY-NEUT BLK 200A W/TAP
17	090388	2	SCREW HHTT M6-1.0 X 12 ZINC
18	0K0117OAL0R	1	ENCLOSURE 200A SE XFRSW RAW
19	0K0118OAL0R	1	COVER,200A SE XFRSW RAW
20	0K0119	1	SUBPLATE,200A SE XFER SW
21	0G93000AL0R	1	CB RISER BRACKET 200A GENERAC RAW
22	0G97730AL0R	1	COVER INSIDE 200A SE SIE RAW
23	022473	4	WASHER FLAT 1/4-M6 ZINC
24	085889	1	NUT HEX 1/4-20 SS
* 25	0D2572	1	FUSEBLOCK 30A 600V 3POS W/SQ
26	073590A	3	FUSE 5A X BUSS
27	0A1495	7	SCREW HHTT M4-0.7 X 10 BP
* 28	0K0103	1	RELAY PNL 12VDC DPDT 10A@240VA
29	0F2659	2	SCREW HHTT M3-0.5 X 6 BP
* 30	0D7393T	1	TERM BLOCK 3P UL 12-20AWG
31	0L3068	2	SCREW THTT M3-0.5 X 25 ZP
32	0D3587	1	DECAL, FUSE REPLACEMENT
33	0E3484	1	DECAL WARN MANUAL OPER HANDLE
34	0G3259	1	DECAL TERMINAL SHOCK HZD BI
35	0G3274	1	DECAL LIVE CIRCUIT ENG/FRN/SPN
36	026902	1	SCREW HHTT #8-32 X 1/4 CZ
37	0H1765A	1	DECAL UTILITY SOURCE CONNECTION
38	0H1765B	1	DECAL GENERATOR/CUSTOMER CONN
39	0H1765C	1	DECAL UTILITY DISCONNECT
40	0H6389	1	DECAL UTILITY LOAD SENSE 240V
41	0H7917	1	DECAL CUSTOMER CONN RTS
42	0H7190	1	BRACKET LOAD SHED 200A RTS
43	0K1018	1	DECAL, NEUTRAL CONNECTION
44	0K1272	1	DECAL TRANSFER SW SIEMENS
45	0K1736C	1	DECAL,XFER SW SE 200A 120/240
46	0K1738	1	DECAL TEST SEQUENCE 100-200A SE
47	0E6155	1	PIN ARM EXTENDER
48	0E6193	1	BRACKET, ARM EXTENDER
49	0D6162	2	RIVET POP .156 X .362 AL
50	0H7270	1	CHANNEL SNAPTRACK 76.2 X 101.2
51	0H7274	1	DECAL NEC COMPLIANCE
52	0L3123	1	ASSY SMART AC MOD
53	0L6699	1	NUT TRIC 1/4-20 ALUM
54	064761	4	TIE WRAP UL 5.6 X .10 NATL
55	0L3247	1	HARNESS 200A SE SACM
56	0L6700	1	SCREW THUMB 1/4-20 X 1/2 KNURL

*-SUPPLIED WITH HARNESS ITEM #55

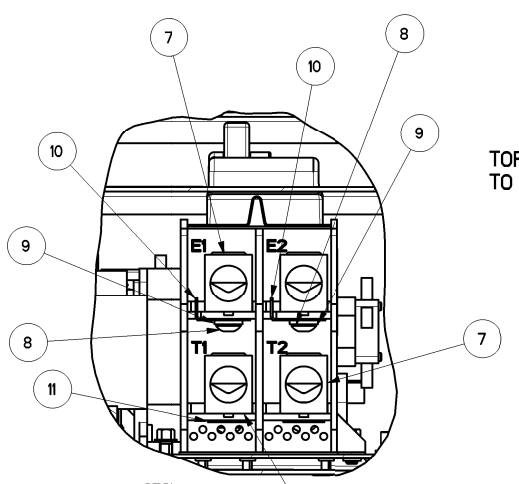

SECTION B-B
SCALE 0.600

TORQUE ITEM #9
TO 72 IN-LBS

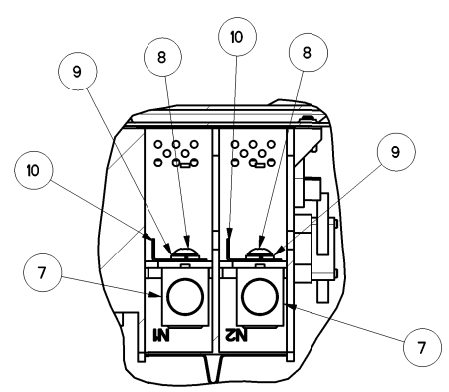

SECTION C-C
SCALE 0.600

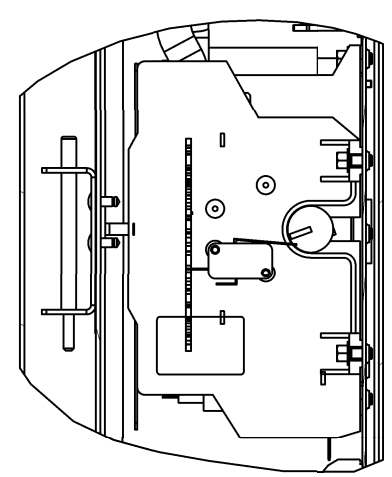

SECTION D-D
SCALE 0.600

PART NUMBER	DESCRIPTION
0L3218	ASSEMBLY 200A SERVICE ENTR SIEM
0L3218A	EXPLODED VIEW DRAWING

REFERENCE DRAWINGS

0L3242 SCHEMATIC/WIRING DIAGRAMS
0K1846 CARTON 30'5 X 14'2 X 7'8
0H7275 TEST PROC HSB XFRSW
0K0121 KIT, ENCL 200A SE AL SIEMENS

DRAWING CREATED FROM PRO/ENGINEER 3D FILE. ECO MODIFICATION TO BE APPLIED TO SOLID MODEL ONLY.

GENERAL TOLERANCES UNLESS NOTED
ALL XX : ± 0.4 MM
XXX : ± 0.4 MM
XXXX : ± 0.15 MM
ALL ANG : ± 1°
INTERPRET DIM AND TOL PER ASME Y14.5M-1994
THIRD ANGLE PROJECTION

GENERAC

TITLE
ASSEMBLY 200A SERVICE ENTRANCE SIEMENS CB

GENERAC POWER SYSTEMS OWNS THE COPYRIGHT OF THIS DRAWING WHICH IS SUPPLIED IN CONFIDENCE AND MUST NOT BE REPRODUCED FOR ANY PURPOSE OTHER THAN FOR WHICH IT IS SUPPLIED WITHOUT THE EXPRESS WRITTEN CONSENT OF GENERAC POWER SYSTEMS. © GENERAC POWER SYSTEMS 2010

ELECTRONICALLY APPROVED
INSIDE WINDCHILL

ISSUE DATE:

SIZE	CAGE NO	DWG NO	REV
D	N/A	0L3218$	D
SCALE 0.300	WT-KG 22428741.55	SHEET 1 of 1	

GENERAL ASSEMBLY DRAWING