W03382

3650 / 3300 WATT ELECTRIC START INVERTER PORTABLE GENERATOR EPA CARB AND cETL CERTIFIED

FIRMAN POWER EQUIPMENT
8716 WEST LUDLOW DR. SUITE #6
PEORIA, AZ 85381
1-844-347-6261
WWW.FIRMANPOWEREQUIPMENT.COM

UPC // 840876133828
STARTING WATTS // 3650
RUNNING WATTS // 3300
VOLTAGE // 120V
FREQUENCY // 60Hz
ENGINE TYPE // OHV
STARTING SYSTEM // ELECTRIC / RECOIL
FUEL TANK VOLUME // 1.8 GAL
RUN-TIME // UP TO 10 HRS (@25% LOAD)
DECIBLES // 58 dB (@7m @25% LOAD)
CARTON L×W×H // 26.6'' × 18.9'' × 19.3''
GROSS WEIGHT // 103 LBS.
UNIT WEIGHT // 91 LBS.
UNITS PER PALLET // 16
UNITS PER CONTAINER // 320 / 40HQ

3 YEAR WARRANTY

CONTROL PANEL
(2) 5-20R 20A-120V
(1) TT-30R 30A-120V RV READY
(1) DC OUTLET 8.3A-12V
(1) USB OUTLET 2.1A-5V

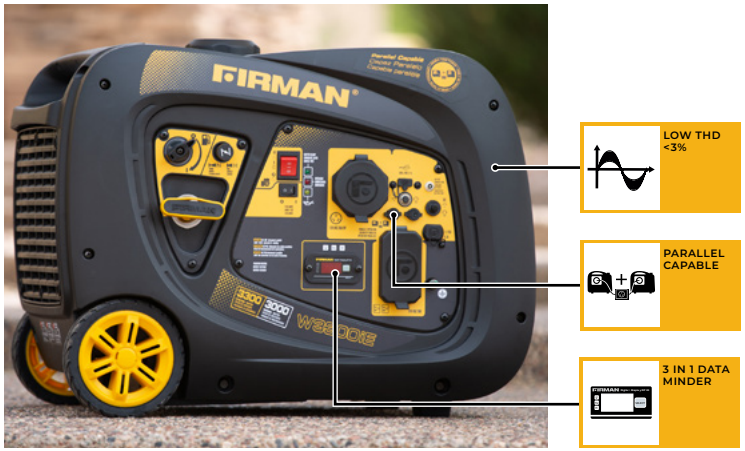

3650 STARTING WATTS

8-HR

193cc

ELECTRIC START

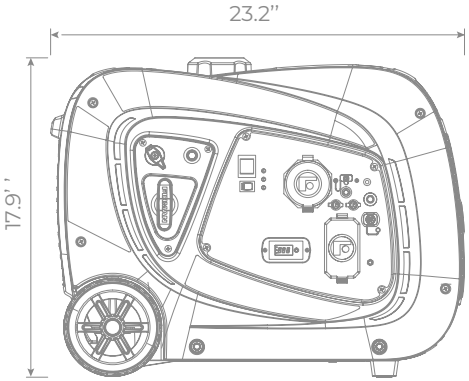

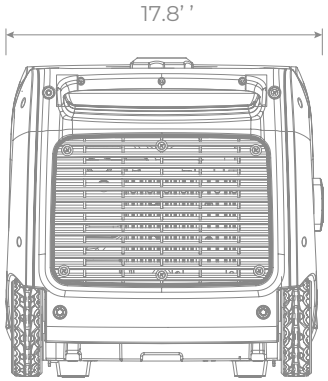

BEST USED FOR

RV READY

W3650iE
3650
3300
Parallel Capable
Capez Paralelo
Capable parallèle
FIRMAN
FIRMAN
120 VAC 20A RV
120 VAC 20A
DO NOT RETURN TO STORE!
Call us First
1-844-347-6261
FOR QUESTIONS OR SERVICE INFORMATION
NE PAS RETOURNER AU MAGASIN!
Appelez-nous d'abord
1-844-347-6261
POUR TOUTE QUESTION OU SERVICE
NO LO DEVUELVA A LA TIENDA!
Primero llámenos
1-844-347-6261
PARA la INFORMACION de PREGUNTAS O SERVICIO