REZNOR®

IMPORTANT

1. Always include complete heater model and serial number so that any specification change can be considered for parts shipment. It can save time and expense.
2. Specifications are subject to change without notice.
3. We reserve the right to substitute functional replacements
4. Order by Part Number. **Do not** order by Option Number.

Applies to: Replacement Parts for Model F, FE, B, and BE Gas-Fired Unit Heaters

INDEX of Parts by Page No.	Blower Model		Fan Model	
	B	BE*	F	FE*
Air Shutter Assembly (Same as Option ED1)	13	13	13	13
Belt Guard/Blower Inlet Guard (Same as Option CD10 or CD12)	12	12	--	--
Blower and Components	7-12	7-12	--	--
Blower/Filter Cabinet (Same as Options CW1, CW2, CW3)	22	22	--	--
Bracket for Mounting Thermostat (Same as Option CM3)	20	20	20	20
Burner Racks and Carryovers	13	13	13	13
Cabinet Parts, Heater	4-5	4-5	4-5	4-5
Contactors	8	8	--	--
Downturn Air Outlet Nozzles (Same as Option CD 2, 3, 4, 5)	23	23	23	23
Drafthood	4-5	4-5	4-5	4-5
Drives	10	10	--	--
Duct Flange (Same as Option CD9)	5	5	--	--
ECO Device	18	--	18	--
Electrical Components	18-20	18-20	18-20	18-20
Fan and Components	--	--	6	6
Fan/Blower Control	18	18	18	18
Fan Guard	--	--	6	6
Flue Baffle	--	--	5	5
Flue Collection Box	--	--	4-5	4-5
Fuse/Fuseholder	19	19	--	--
Gas Conversion Kits	See Form CP-F/B-GC			
Hangers (Same as Options CK7, CK8, CK9, CK10, CK19)	21	21	21	21
Heat Exchangers	12	12	12	12
Ignition Controller	20	20	20	20
Ignition Conversion Kits	20	--	20	--
Limit Control	18	18	18	18
Louvers	4-5	4-5	4-5	4-5
Manifold	13	13	13	13
Motor (Fan or Blower)	7, 9	7, 9	6	6
Motor (Venter)	16	15	16	15
Multiple Heater Control Kit (Same as Option CL31 and CL32)	20	20	20	20
Pilots	14	14	14	14
Polytube Adapter (Same as Options CD6, CD8, CD11)	24	24	--	--
Pressure Switch	--	15	--	15
Rating Plate	2	2	2	2
Relay Kit for Low Ambient Fan Control (Same as Option CQ3)	20	20	20	20
Replacement Parts Tag	3	3	3	3
Serial Number Information	2-3	2-3	2-3	2-3
Starters	9	9	--	--
Switch, Blocked Vent	19	--	19	--
Switch, Summer/Winter (Same as Option CH1)	18	18	18	18
Tape (Flue Exhaust)	16	16	16	16
Thermostats	20	20	20	20
Transformers (Control)	19	19	19	19
Transformers (Same as Options CF and CG)	21	21	21	21
Valve, Electric Gas	See Form P-VALVES			
Valve, Manual Shutoff	13	13	13	13
Vent Cap	17	16	17	16
Vent Damper, Automatic (Same as Option AV7)	19	--	19	--
Venter - Models FE/BE	--	15	--	15
Venters (Models F/B - Same as Options CA1, CA2, CA3)	16	--	16	--

Warranty - Models F, FE, B, BE

One-year limited warranty on the heater

Nine-year extended limited warranty on the heat exchanger, drafthood, flue baffle assembly, flue collection box, and burners

Four-year extended limited warranty on operational parts (except blower belts)

Model F, Fan-Type, Gravity Vent

Model B, Blower-Type, Gravity Vent

***Model FE, Fan-Type, Power Vent**

***Model BE, Blower-Type, Power Vent**

*Models FE and BE are no longer manufactured.

Dates of Introduction

Model	Introduction
F	AND (4/88)
FE	AND (4/88)
B	ANL (12/88)
BE	ANL (12/88)

Example of a Rating Plate

REZNOR
MERCER, PA. USA 16137
MADE IN MEXICO
UNIT HEATER
CATEGORY III
FOR INDUSTRIAL/COMMERCIAL USE ONLY
ANSI Z83.8a CGA 2.6-M98 UNIT HEATER
MODEL [B] [C]
SERIAL NO. BAA 65W7N12345
[D] VOLTS **[D]** PH **[D]** HZ MAXIMUM TOTAL INPUT **[D]** AMPS
TYPE OF GAS: [E]
ORIFICE SIZE [F] DRILL HAS BEEN FACTORY ADJUSTED
FOR USE AT [H] FEET [G] METERS OF ALTITUDE.

	SEA LEVEL	ALT. ADJUSTED
NORMAL INPUT	[I]	[J]BTU/HR.
THERMAL OUTPUT CAPACITY	[K]	[L]BTU/HR.
MINIMUM INPUT (-2 MODELS)	[M]	[N]BTU/HR.
NORMAL MANIFOLD PRESSURE		[O] IN.W.C.
MIN. PERMISSIBLE GAS SUPPLY PRESSURE FOR PURPOSE OF INPUT ADJUSTMENT.		[P] IN.W.C.

CLEARANCES TO COMBUSTIBLE CONSTRUCTION: TOP-[Q]", FLUE CONNECTION-6", LEFT SIDE-18", RIGHT SIDE-18", BOTTOM-12" EXCEPT WHEN SUPPLIED WITH OPTIONAL DOWNTURN NOZZLE BOTTOM IS 42".
FOR ALTERNATE INSTALLATIONS USE THE LATEST EDITIONS OF THE APPROPRIATE STANDARD LISTED BELOW / INSTALL IN ACCORDANCE WITH REQUIREMENTS OF ENFORCING AUTHORITIES:

FOR AIRCRAFT HANGARS	USE STANDARD ANSI/NFPA 409
FOR PARKING STRUCTURES	USE STANDARD ANSI/NFPA 88A
FOR REPAIR GARAGES	USE STANDARD ANSI/NFPA 88B

THIS UNIT IS NOT FOR USE WITH DUCTS.
THIS UNIT IS NOT FOR USE WITH FILTERS.
THIS UNIT IS FOR USE WITH NATURAL GAS AND PROPANE. A CONVERSION KIT AS SUPPLIED BY THE MANUNFACTURER, SHALL BE USED TO CONVERT THIS UNIT HEATER TO THE ALTERNATE FUEL.

Key to Rating Plate Information:
B = Model No. (Size)
C = Month and Year of Manufacture
D = Volts, Phase, Hertz and Maximum Total Input Amps
E = Type of Gas (Natural or Propane)
F = Burner Orifice Size
G and H = Elevation in Feet and Meters
I = Normal Input (BTUH) at Sea Level
J = BTUH Input Adjusted for Altitude
K = Thermal Output Capacity (BTUH) at Sea Level
L = BTUH Output Adjusted for Altitude
M = Minimum Input (BTUH) at Sea Level
N = BTUH Minimum Input Adjusted for Altitude
O = Normal Manifold Pressure (in. w.c.)
P = Minimum Gas Supply Pressure (in w.c.)
Q = Top Clearance (inches)

Serial No. Explanation

Example:

BAA	65	W7	N	12345
1	2	3	4	5

Key:
1 = Date of manufacturer (see table on page 3)
2 = Type of Pilot (Refer to Form P-VALVES)
3 = Gas Valve (Refer to Form P-VALVES)
4 = Type of Gas (N = Natural; L = Propane)
5 = Consecutive number of heater made (identification only)

Model No. Suffixes:

-S = Stainless steel heat exchanger
-2 = Two-stage gas valve
-E = Intermittent spark ignition (Models F/B)
-H = High altitude

Example of a Replacement Parts Tag

Replacement parts tags on unit heaters are for your convenience in identifying replacement part numbers. Always give the full Model No., Serial No., and Part No. with description when ordering replacement parts.

COMMON REPLACEMENT PARTS FOR:
MODEL: **FE100**
SERIAL NUMBER: **BAA65W7N12345**
WHEN ORDERING PARTS, ALWAYS GIVE THE FULL MODEL NUMBER AND SERIAL NUMBER.
Fan or Blower Motor 95548
Fan Blade 41004
Fan Control 123976
Limit Control 45602
Transformer 131988
Pilot 97534
Gas Valve 170609
Heat Exchanger 102285

WARNING
ALL PARTS ARE FOR USE WITH THE FUEL IDENTIFIED ON THE UNIT RATING PLATE. IF THE UNIT HAS BEEN CONVERTED TO OTHER FUELS, CHECK WITH THE DEALER FOR PROPER FUEL-CARRYING PARTS. INSTALLATION OF IMPROPER PARTS CAN CAUSE DEATH OR INJURY OR PROPERTY LOSS.

First Element of the Serial Number - Date of Manufacture

Year	Jan	Feb	Mar	Apr	May	June	July	Aug	Sept	Oct	Nov	Dec
1988	ANA	ANB	ANC	AND	ANE	ANF	ANG	ANH	ANI	ANJ	ANK	ANL
1989	AOA	AOB	AOC	AOD	AOE	AOE	AOG	AOH	AOI	AOJ	AOK	AOL
1990	APA	APB	APC	APD	APE	APF	APG	APH	API	APJ	APK	APL
1991	AQA	AQB	AQC	AQD	AQE	AQF	AQG	AQH	AQI	AQJ	AQK	AQL
1992	ARA	ARB	ARC	ARD	ARE	ARF	ARG	ARH	ARI	ARJ	ARK	ARL
1993	ASA	ASB	ASC	ASD	ASE	ASF	ASG	ASH	ASI	ASJ	ASK	ASL
1994	ATA	ATB	ATC	ATD	ATE	ATF	ATG	ATH	ATI	ATJ	ATK	ATL
1995	AUA	AUB	AUC	AUD	AUE	AUF	AUG	AUH	AUI	AUJ	AUK	AUL
1996	AVA	AVB	AVC	AVD	AVE	AVF	AVG	AVH	AVI	AVJ	AVK	AVL
1997	AWA	AWB	AWC	AWD	AWE	AWF	AWG	AWH	AWI	AWJ	AWK	AWL
1998	AXA	AXB	AXC	AXD	AXE	AXF	AXG	AXH	AXI	AXJ	AXK	AXL
1999	AYA	AYB	AYC	AYD	AYE	AYF	AYG	AYH	AYI	AYJ	AYK	AYL
2000	AZA	AZB	AZC	AZD	AZE	AZF	AZG	AZH	AZI	AZJ	AZK	AZL
2001	BAA	BAB	BAC	BAD	BAE	BAF	BAG	BAH	BAI	BAJ	BAK	BAL
2002	BBA	BBB	BBC	BBD	BBE	BBF	BBG	BBH	BBI	BBJ	BBK	BBL
2003	BCA	BCB	BCC	BCD	BCE	BCF	BCG	BCH	BCI	BCJ	BCK	BCL
2004	BDA	BDB`	BDC	BDD	BDE	BDF	BDG	BDH	BDI	BDJ	BDK	BDL
2005	BEA	BEB	BEC	BED	BEE	BEF	BEG	BEH	BEI	BEJ	BEK	BEL
2006	BFA	BFB	BFC	BFD	BFE	BFF	BFG	BFH	BFI	BFJ	BFK	BFL
2007	BGA	BGB	BGC	BGD	BGE	BGF	BGG	BGH	BGI	BGJ	BGK	BGL
2008	BHA	BHB	BHC	BHD	BHE	BHF	BHG	BHH	BHI	BHJ	BHK	BHL
2009	BIA	BIB	BIC	BID	BIE	BIF	BIG	BIH	BII	BIJ	BIK	BIL
2010	BJA	BJB	BJC	BJD	BJE	BJF	BJG	BJH	BJI	BJJ	BJK	BJL
2011	BKA	BKB	BKC	BKD	BKE	BKF	BKG	BKH	BKI	BKJ	BKK	BKL
2012	BLA	BLB	BLC	BLD	BLE	BLF	BLG	BLH	BLI	BLJ	BLK	BLL
2013	BMA	BMB	BMC	BMD	BME	BMF	BMG	BMH	BMI	BMJ	BMK	BML
2014	BNA	BNB	BNC	BND	BNE	BNF	BNG	BNH	BNI	BNJ	BNK	BNL
2015	BOA	BOB	BOC	BOD	BOE	BOF	BOG	BOH	BOI	BOJ	BOK	BOL
2016	BPA	BPB	BPC	BPD	BPE	BPF	BPG	BPH	BPI	BPJ	BPK	BPL
2017	BQA	BQB	BQC	BQD	BQE	BQF	BQG	BQH	BQI	BQJ	BQK	BQL
2018	BRA	BRB	BRC	BRD	BRE	BRF	BRG	BRH	BRI	BRJ	BRK	BRL
2019	BSA	BSB	BSC	BSD	BSE	BSF	BSG	BSH	BSI	BSJ	BSK	BSL
2020	BTA	BTB	BTC	BTD	BTE	BTF	BTG	BTH	BTI	BTJ	BTK	BTL

Literature References by Form No.:

All literature is available for viewing or downloading on www.RezSpec.com

Form	Applies to	Installation Instructions for:	Form P/N
I-F/B	**F/B**	**Heater Installation Manual**	98126
I-F/B-HV	F/B 250, 300, 400	Horizontal/Vertical Vent Outlet	102860
I-F/B-HV125	F/B125	Horizontal/Vertical Vent Outlet	132794
I-F/B-PV	F/B	Optional Power Venter	97967
I-FE/BE	**FE/BE**	**Heater Installation Manual**	98807
I-F/B-AS	F/B/FE/BE	Optional Air Shutters	98239
I-B-BF	B/BE	Optional Blower Cabinet	99714
I-B-BG	B/BE	Optional Guards	101542
I-B-DF	B/BE	Optional Duct Flange	101192
I-F/B-DN	F/B/FE/BE	Optional Downturn Air Nozzles	97926
CP-F/B-GC	F/B/FE/BE	Gas Conversion Kits	99279
I-F/B-LA	F/B/FE/BE w/1-stg gas valve	Optional Low Ambient Fan Control Relay	131134
I-B-PF	B/BE	Optional Polytube Adapters for Floor-Level Units	101694
I-B-PS	B/BE	Optional Polytube Adapters for Suspended Units	101500
I-F/B-R	F/FE/B/BE	Optional Relays	98149
I-B-SWB	B/BE	Optional Summer Fan Switch	101678
I-F-SWF	F/FE	Optional Summer Fan Switch	98294
I-F/B-VL	F/FE/B/BE	Optional Vertical Louvers	97925
I-F/B-X	F/FE/B/BE	Optional Stepdown Transformers	102265
P-VALVES	All	Ignition Controllers, Valves, & Serial No. Identification	N/A
CP-F/B-IGN	F/B	Ignition Conversion Kits	100550

Cabinet Parts

Model F/B Drafthoods (heaters manufactured beginning 10/89)

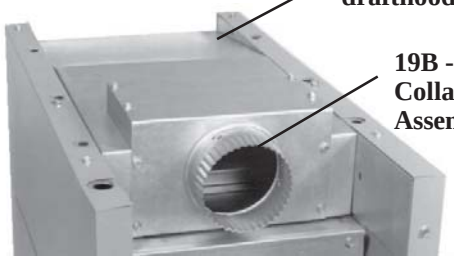

Sizes 25-100, 130-200

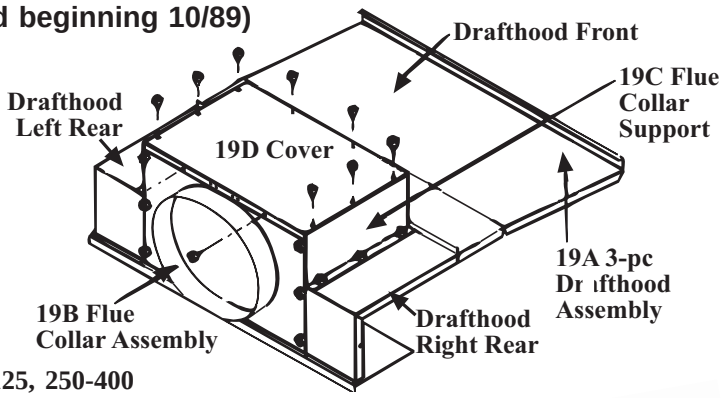

Sizes 125, 250-400

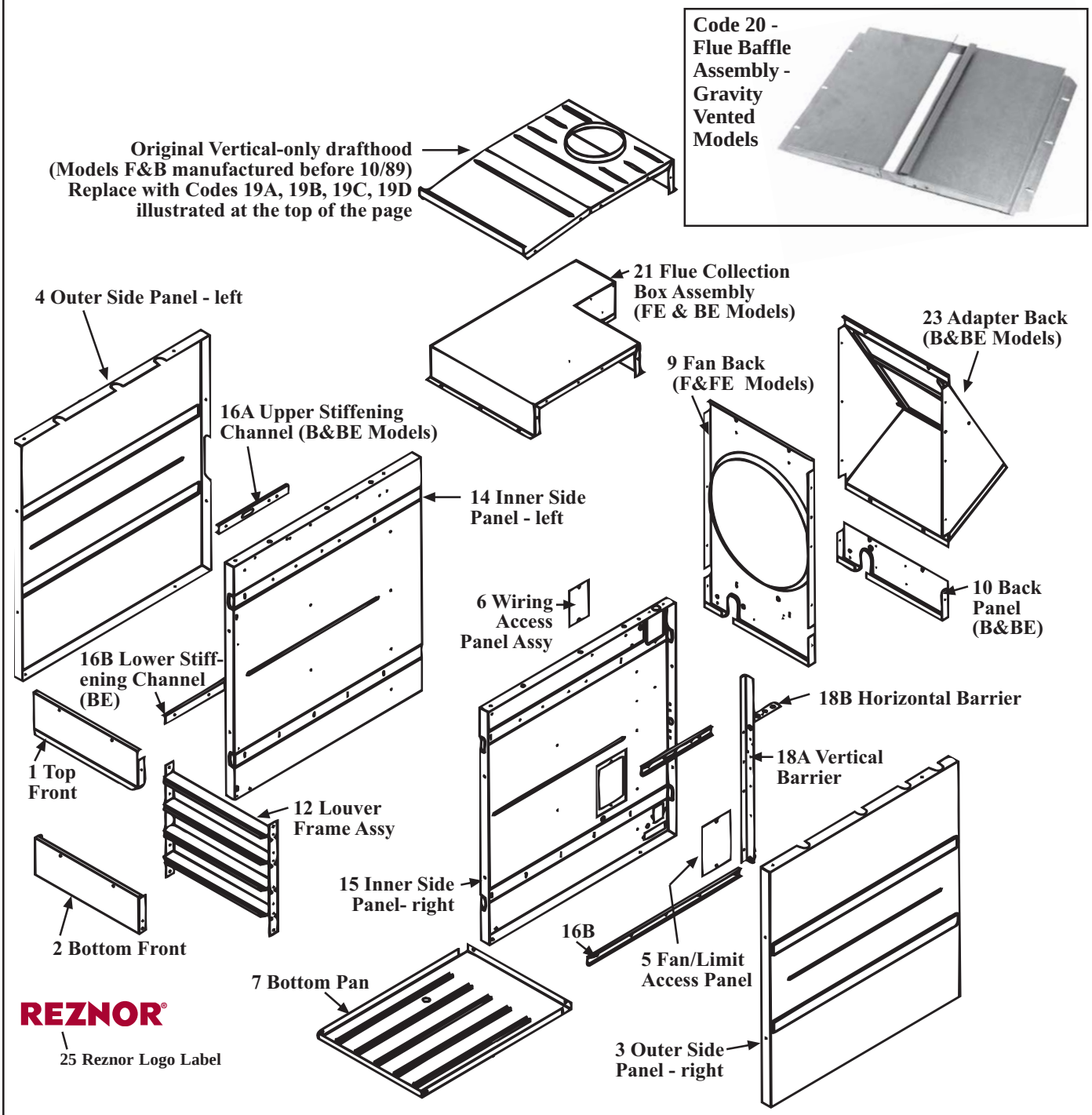

Code	Description		Size										
			25	50	75	100	125	130	165	200	250	300	400
1	Top Front		94661		94662	94663	94665	94663	94664	94665	94666		94667
2	Bottom Front		94668		94669	94670	94672	94670	94671	94672	94673		94674
3	Right Side Outer Panel		104968					104970					
4	Left Side Outer Panel		104969					104971					
5	Fan/Limit Access Panel		94898										
6	Wiring Access Panel		94897										
7	Bottom Panel		94687	94688	94689	94690	131607	94691	94692	94693	94694	94695	94696
8	Right Hinge Pin Assembly for Bottom Panel		96445										
	Left Hinge Pin Assembly for Bottom Panel		99351										
9	Fan Back Panel - Fan Model		94675		94676	161181	161184	N/A	161182	94680	161183		94682
10	Back Panel - Blower Model		99830		99831	99832	99835	99833	99834	99835	99836		99837
11	Latch Fastener for Fan Back (2) - used prior to 2/95		96435										
12	Horizontal Louver Assembly		94851		94855	94857	131803	94859	94863	94865	94867		94869
13	Vertical Louver Assembly (Same as Option CD1)		98500		98501	98502	136863	98503	98504	98505	98506		98507
13A	Vertical Louver Top/Bottom Member only		97852		97853	97854	97856	97854	97855	97856	97857		97858
13B	Vertical Louver only		95937					95938					
			(4)	(4)	(4)	(4)	(6)	(4)	(6)	(6)	(8)	(8)	(10)
14	Inner Left Side Panel		94842					94837					
15	Inner Right Side Panel (includes conduit	Fan Models	99025					99026					
	nut plate for electrical supply)	Blower Models	102346					102347					
16A	Upper Stiffening Channel	Blower Models	100867 (2)					100869 (2)					
16B	Lower Stiffening Channel	Blower Models	100868 (2)					100870 (2)					
17	Air Deflectors (not illustrated)												
	Horizontal - Right Side	Fan Models	--	--	--	--	--	96141					94899
	Vertical - Right Side	All Models	96714	--	--	--	--	--	--	--	--	--	--
	Horizontal - Left Side	Fan Models	--	96140		--	--	96140		96141			94900
	Vertical - Left Side	All Models	96714	--	--	--	--	--	--	--	--	--	--
18A	Vertical Barrier		94749					94750					
18B	Horizontal Barrier		94751										
19A	Drafthood for Gravity Vent Sizes 25-200		102449		102450	102451	131608	102838	102839	102840	--	--	--
(See	Drafthood Assembly for Gravity Vent Sizes 250-400		--	--	--	--	--	--	--	--	101909		101910
NOTE	Components: Drafthood Front		--	--	--	--	--	--	--	--	105310		105311
Below)	Drafthood Right Rear		--	--	--	--	--	--	--	--	101903		101904
	Drafthood Left Rear		--	--	--	--	--	--	--	--	101906		101907
	Screws, #10 x 1/2" sheetmetal		--	--	--	--	--	--	--	--	51489 (6)		
19B	Flue Collar Assembly - Gravity Vent Models		102363		102364	102365	132765	102844	102845		102846		102847
19C	Flue Collar Support - Gravity Vent Models		--	--	--	--	131992	--	--	--	102857		
19D	Cover for Horizontal/Vertical Vent		--	--	--	--	132764	--	--	--	102855		
	(On sizes 25-100 and 130-200, the cover and flue collar assembly are one piece)												
20	Flue Baffle Assembly - Gravity Vent Models		100859	100886	100887	100860	131811	100861	100862	100863	100864	100865	100866
21	Flue Collection Box Assembly - Power Vent Models		97744		97746	97747	131804	97748	97749	97750	97751	97752	97753
22A	Flue Baffle - Power Vent Models		--	--	97783	97784	134766	97785	97786	97787	101008	101009	101010
22B	Flue Baffle Clamp - Power Vent Models		--	--	98196								
23	Adapter Back Assy including Baffles	Blower Models	100871		100872	100873	131975	100874	100875	100876	100877		100878
24	Duct Flange Kit (Same as Option CD9)	Blower Models	101194		101195	101501	135591	101196	101197	101198	101199		101200
24A	Duct Flange Top and Bottom	Parts in Opts	101155		101156	101157	101159	101157	101158	101159	101160		101161
24B	Duct Flange Sides	CD9 and AX4	101163		101163	101163	101163	101164	101164	101164	101164		101164
25A	Reznor Logo Label		196690										
25B	Tawny Beige Touch-up Paint, 10 oz spray can		37919										
25C	Maroon touch-up Paint, 12 oz apray can		207432										

NOTE: Effective 4/1/91, all gravity-vent Model F and B heaters include a blocked vent system requiring holes in the drafthood. When replacing a drafthood on a heater without a blocked vent switch, these holes will not affect heater operation.

Code 13 - Vertical Louver Assembly (Same as Option CD1)

On fan models, do not use vertical louvers with optional discharge nozzles.

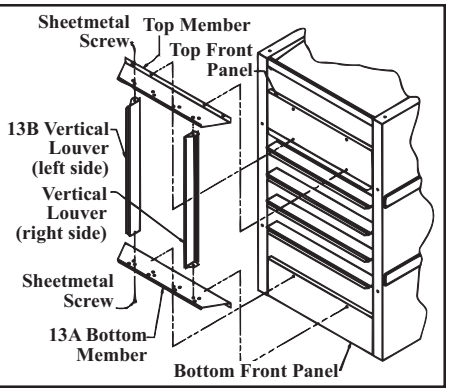

Code 8 - Hinge Pin Assy

Code 11 - Latch Fastener for Fan Back (used on heaters mfgd prior to 2/95)

Code 24 - Duct Flange Parts (Same as Option CD9; components used in Option AX4)

Fan Components -- Models F and FE

Code	Description	Size										
		25	50	75	100	125	130	165	200	250	300	400
26A	Full Fan Guard (See Notes below)	**110907**		**110908**	**110910**	**132363**	**110910**	**136209** (replaces 110911)	**110912**	**176647** (replaces 131404 and 110914)		**176648** (replaces 110915 & 131405)
26B	Fan Guard Plate (2)	--	--	--	--	**133977**	--	**133978**	--	**176151**		
26C	Fan Guard Screws w/Washer	**96450** (4)				--	--	--	**96450** (4)			
	#10-32 1/2" lg Hex Hd Screw									**113275** (8)		
26D	Fan Guard Isolator Assy (4)	--	--	--	--	**96451**	--	**96451**	--	**96451**		
26E	Washer for Code 26D (4)	--	--	--	--	**96452**	--	**96452**	--	**96452**		
27	Motor Adapter Plate	--	--	--	--	**96452**	--	**96452**	--	**176523**		
28	Fan Motor, 115/1/60, Open	**96286** Universal #JA2C377N	**96287** Universal #JA2N199N	**96288** Universal #JA2R238N	**95548** 1/30HP A.O. Smith #326P139		**95547** 1/20HP			**95546** 1/6HP A.O. Smith #F42A51A13	**147913** 1/4HP A.O. Smith #F48H01A13 (replaces 95545)	**156275** 1/2HP
	Fan Motor, 208/230/1/60, Open	--	--	--	--	**97809** 1/6HP A.O. Smith #322P943					**122665** 1/2HP Fasco #7128-0341	
	Fan Motor, 115/1/60, Enclosed	**96286** Universal #JA2C377M	**100992** Universal #JA2S128N		**102380** 1/8HP A.O. Smith #322P986				**102381** 1/6HP A.O. Smith #F48G56A13	**137044** 1/4HP (replaces 115866)		--
	Fan Motor, 230/1/50 Hertz (Opt AK11) Model F only	**112675** Universal #JF2K010N			**121277** A.O. Smith #92AC154					**172794** Assy including motor P/N 155063		
	Fan Motor, .018HP, 115/1, School Option (Opt AL2B) for Model F50 only	--	174403	--	--	--	--	--	--	--	--	--
29	Fan Blades (For proper shaft placement, see Table in Fan Guard Notes below)	**132465** Revcor #01005-18 (replaces 96377)	**129853** Revcor #011005-34 (replaces 96378)	**96379** Revcor #G1203-30	**41004** Lau #FP-1437	**131970** Revcor #T1603-32	**104692** Revcor #T1404-40 (replaces 48692)	**96380** Revcor G1603-40	**96381** Lau #F10 H8.7 20-24	**96382** Lau #F10 H8.7 22-26	**96383** Lau #F10 H8.7 22-36	**96384** Lau #F-12 H8.7 24-36
	Fan Blades, 5/16" bore, 10" dia, 5 blades, 34° pitch, School Option (Opt AL2B) for Model F50 only	--	**129853**	--	--	--	--	--	--	--	--	--

Model FE illustrating one-piece Fan Guard

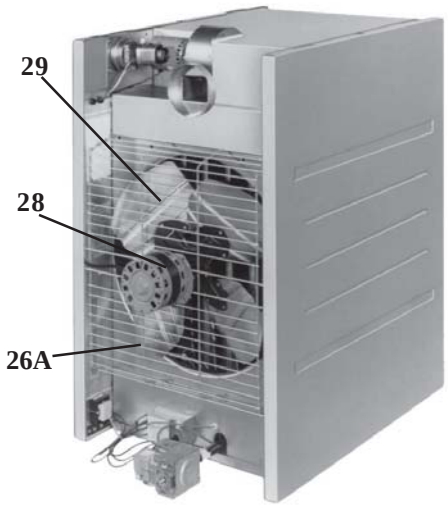

Fan Guard Notes

Model	Date of Manufacture	Type of Standard Fan Guard Marking	Standard Carton Fan Guard	Available Optional with Option	Carton Marking
F	4/88 - 10/90	Lower Half only	None	Upper Half	Upper Fan Guard
	After 10/90 Fan Guard	One-Piece Full Guard	Full Fan	None	N/A
FE	4/88 - 10/89	Lower Half only	None	Upper Half	Upper Fan Guard
	10/89 - 10/90 Lower Halves	Both Upper and Guard	Upper Fan	None	N/A
	After 10/90 Full Fan Guard	One-Piece Guard	Full Fan	None	N/A

Fan Guard Replacement - The upper and lower fan guard halves are no longer available. If adding an "upper half" or replacing a fan guard, it is necessary to install the full fan guard (Code 24). To make this replacement, follow these instructions.

1. If the heater is installed, turn off the gas and disconnect the electric power.
2. Remove the left outer side panel (left when facing the rear of the unit). Disconnect the fan motor wires.
3. If present, remove the tension-mounted upper half fan guard.
4. Remove the four screws for attaching the fan guard. Remove the lower half fan guard, the motor, and the fan blade.
5. Assemble the new full fan guard, the motor and the fan blade. To Assure proper grounding of the motor, it is important that the same hardware be used for attaching the motor to the fan guard as was used with the original guard.
   Be sure fan blade is in the same position on the shaft; see illustration and Table, page 7.

Fan Motor Spacing

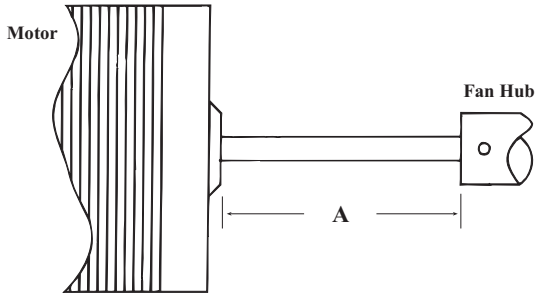

Size	Electrical Supply	Fan Blade P/N	Set Screw Torque In-Lbs	"A" Hub to Motor Spacing
25	60 Hz	**132465**	8 + or - 10	1-1/4"
	50 Hz*			3-1/4"
50	60 Hz	**129853**	8 + or - 10	3/8"
	50 Hz*			3-1/4"
75	60 Hz	**96379**	8 + or - 10	1/8"
	50 Hz*			3-1/4"
100	50* or 60 Hz	**41004**	120 + or - 10	2-1/2"
125		**131970**		
130		**104692**		
165		**96380**	150 + or - 10	
200		**96381**		
250		**96382**		
300		**96383**		
400		**96384**		

*Only gravity-vented F models are available with 50 Hz.

Position the assembly on the heater. Attach the fan guard at the center mounts using the screws that held the old fan guard. (It is important that you use these specially designed screws because they will cut through the coating on the fan guard to provide a ground for the fan motor.)

Rotate the fan blade to check for adequate clearance. If adjustment is required, loosen the mounting screws, re-position the fan guard, and tighten the screws. Rotate the fan blade and re-check for adequate clearance. Repeat this procedure until the assembly is positioned properly.

6. Drill the required upper and lower mounting holes. Attach the new fan guard at all upper and lower mounting points using field-supplied sheet metal screws.
7. Reconnect the fan motor wires and replace the outer side panel.
8. Restore power to the heater and turn on the gas. Light following the instructions on the lighting instruction plate. Check for proper operation.

Blower Components - Models B and BE 25-100 with Direct Drive Motor

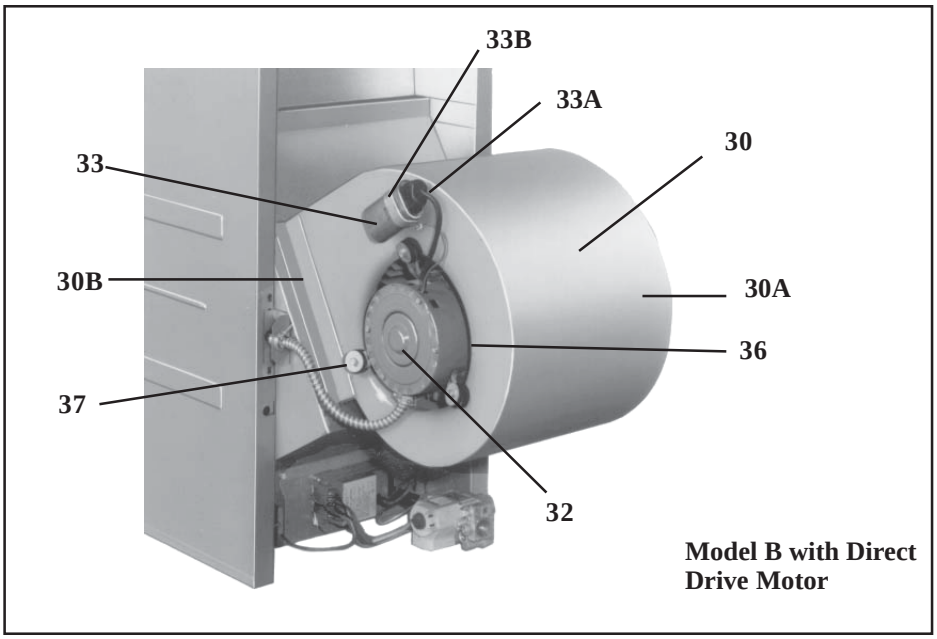

Model B with Direct Drive Motor

Code	Description	Size 25	Size 50	Size 75	Size 100
30	Blower assy including blower (Code 30A), mounting angle (Code 30B), and restrictors	**100897**	**100898**		**100899**
30A	Blower only including housing and wheel	**82111**, Lau #DD9-6AP			**43607**, Lau #DD9-9AP
30B	Blower Mounting Angle	**100888** (2)			
31	Blower Washer 3/4" x 1-1/2"	**1087** (4)			
32	Direct Drive Motors, 115 volt	**201760**, 1/6HP (replaces 100491)		**201761**, 1/3HP (replaces 100490)	
33	Capacitor	**101917** 5MFD/370V (replaces 43614)		**101918** 7.5MFD/370V (replaces 82095)	
33A	Capacitor End Cap (Stone City #4522-07)	**82113**			
33B	Capacitor Strap Bracket (Stone City #1614)	**82114**			
34	Washer 1-1/8" OD x 1/4" ID	**82450** (3)			
35	Screw #14 x 1-1/4" Slotted Hex	**82451** (3)			
36	Motor Band	**51221**			
37	Motor Support	**51223** (3)			

Blower Components (cont'd)

Models B and BE 50-400 with Belt-Driven Motor

Model BE with a Belt-Driven Motor

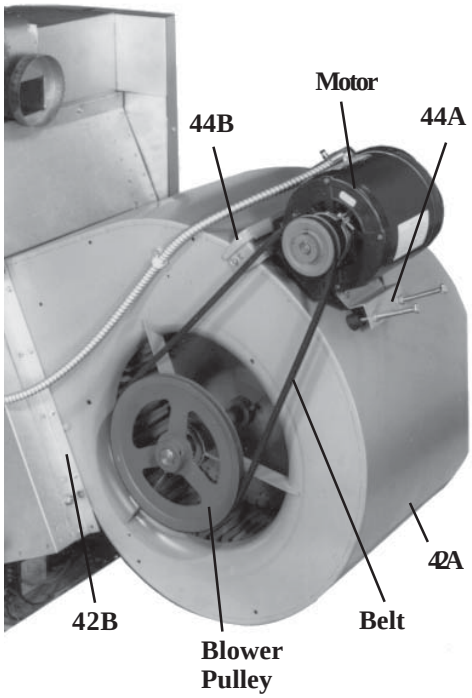

Code 44A - Motor Adjustment Mounting Assy - used with less than 1HP Motor

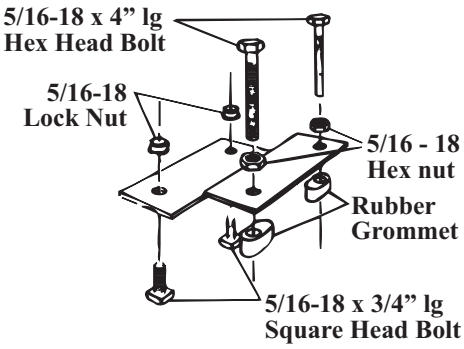

Code 44B - Blower Motor Mounting Bracket

Motor Adjustment Mounting Assy - 1HP and larger motor

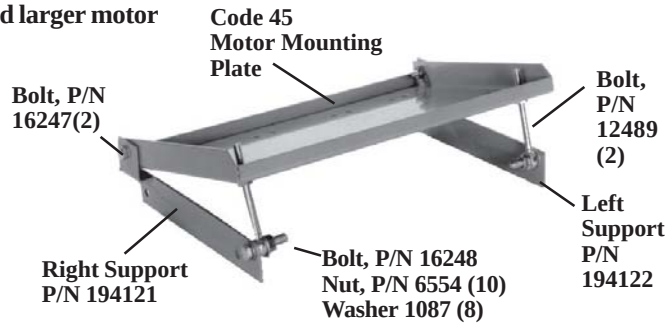

Code	Description	Size							
		50	75	100	125	130/165	200	250/300	400
42A	Blower only	**100655**, Lau #A9-6ACD		**100656**, Lau #A9-9A	**1357**, LAU #10AC-10AC	**100657**, Lau #A12-9ACD	**100658**, Lau #A15-11ACD		**100659**, Lau #A15-15ACD
42B	Blower Mounting Angle	**100888** (2)			**131800** (2)	**100889** (2)	**100890** (2)		
42C	Blower Bearings	**7310** (2)				**10437** (2)			
43	Blower Washer 3/4" x 1-1/2"	--	--	--	--	**1087** (4)			
44A	Mtr Adjustment Bracket Assy - 3/4HP or less	**44411**							
44B	Blower Mtr Mounting Bracket - 3/4HP or less	**102536**		**102537**	**44409**	**102533**	**102534**		**102535**
45	Blower Mtr Mounting Plate - 1 HP and larger (plate only, see illustration for additional parts)	--	--	--	--	**114545**	**194120**		**194118**
46	Key-1/4" square x 1-1/4" long	**16099**							

Motor Contactor

Code	Description	Sizes	
		50-300	400
47A	Contactor, 115V, Furnas #42AF35AF (Important Note: If replacing a Gould contactor, order complete contactor assy including a new enclosure, P/N 95527)	**119626** (replaces 93662)	--
	Contactor, 230V, Furnas #42AF35AG (Important Note: If replacing a Gould contactor, order complete contactor assy including a new enclosure, P/N 95528)	**119627** (replaces 93663)	
	Contactor, 460V, 24V Coil, Furnas #42AF35AJ (Important Note: If replacing a Gould contactor, order complete contactor assy including a new enclosure, P/N 95526)	**119625** (replaces 93661)	
47B	Contactor Enclosure (for use with Furnas contactor only)	**93917**	
47C	Contactor Enclosure Cover (for use with Furnas contactor only)	**120302**	

Code 47 - Motor Contactor with Cover Removed

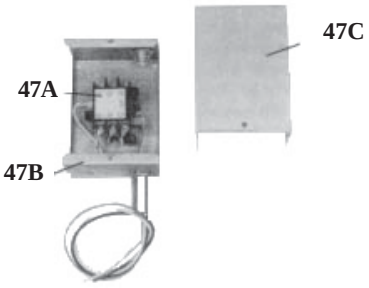

Belt-Driven Blower Motors and Motor Starters

Motors that do not list a contactor and overload have internal overload protection and are used with a contactor (**Code 47A**, page 8). Motors in the tables below with a contactor (starter) and overload listed do not have internal overload protection and must be used with the motor starter and overload. All motor starters must be ordered with a NEMA 1 enclosure, **P/N 151207**, GE#CLXE1A.

Motor							Service	Power	Eff	Contactor	Reznor	Overload	o.l.	o.l.	Reznor
Type	HP	FLA	Model No.	P/N	volt	ph	Factor	Factor	%	GE#	P/N	GE#	min	max	P/N
Open	1/4	4.6	BF2024	**210611**	120	1	1.35			-	-	-	-	-	-
Open	1/4	2.3	BF2024	**210611**	208	1	1.15	63	59	-	-	-	-	-	-
Open	1/4	2.3	BF2024	**210611**	240	1	1.15	63	59	-	-	-	-	-	-
Open	1/4	1.1	H200	**115864**	208	3	1.35	72	74	-	-	-	-	-	-
Open	1/4	1.4	H200	**115864**	240	3	1.35	72	74	-	-	-	-	-	-
Open	1/4	0.75	H200	**115864**	480	3	1.35	72	81	-	-	-	-	-	-
Open	1/3	6	BF2034	**202091**	120	1	1.35			-	-	-	-	-	-
Open	1/3	3	BF2034	**202091**	208	1	1.35	62.8	61.3	-	-	-	-	-	-
Open	1/3	3	BF2034	**202091**	240	1	1.35	62.8	61.3	-	-	-	-	-	-
Open	1/3	1.4	H260	**115863**	208	3	1.35			CL00A310T-L	**151150**	RTA1-G	1.00	1.50	**151187**
Open	1/3	1.6	H260	**115863**	240	3	1.35			CL00A310T-S	**151147**	RTA1-H	1.30	1.90	**151188**
Open	1/3	0.8	H260	**115863**	480	3	1.35			CL00A310T-U	**151148**	RTA1-F	0.65	1.10	**151186**
Open	1/2	8.8	BF2054	**102627**	120	1	1.15			-	-	-	-	-	-
Open	1/2	5.1	BF2054	**102627**	208	1	1.15			-	-	-	-	-	-
Open	1/2	4.4	BF2054	**102627**	240	1	1.15			-	-	-	-	-	-
Open	1/2	2.5	H880	**159183**	208	3	1.25			-	-	-	-	-	-
Open	1/2	3	H880	**159183**	240	3	1.25			-	-	-	-	-	-
Open	1/2	1.5	H880	**159183**	480	3	1.25			-	-	-	-	-	-
Open	1/2		AOS - H991	**202089**	575	3				Contact distributor or factory.					
Open	3/4	11	312P629	**93548**	120	1	1.25			-	-	-	-	-	-
Open	3/4	6.3	312P629	**93548**	208	1	1.25			-	-	-	-	-	-
Open	3/4	5.5		**93548**	240	1	1.25			-	-	-	-	-	-
Open	3/4	2.9	312P696	**36951**	208	3	1.25			-	-	-	-	-	-
Open	3/4	2.6	312P696	**36951**	240	3	1.25			-	-	-	-	-	-
Open	3/4	1.3	312P696	**36951**	480	3	1.25			-	-	-	-	-	-
Open	3/4		AOS - H992	**202090**	575	3				Contact distributor or factory.					
Open	1	13	C523	**13685**	120	1	1.25			-	-	-	-	-	-
Open	1	7.5	C523	**13685**	208	1	1.25			-	-	-	-	-	-
Open	1	6.5	C523	**13685**	240	1	1.25			-	-	-	-	-	-
Open	1	3.7	H882	**36580**	208	3	1.15		79	-	-	-	-	-	-
Open	1	3.2	H882	**36580**	240	3	1.15		79	-	-	-	-	-	-
Open	1	1.6	H882	**36580**	480	3	1.15		79	-	-	-	-	-	-
Open	1	1.1	E1006	**158175**	575	3	1.15		82.5	CL00A310T-Y	**151149**	RTA1-G	1.00	1.50	**151187**
Open	1.5	15	C621	**194202**	120	1	1.2	86.4	77.2	-	-	-	-	-	-
Open	1.5	7.8	C621	**194202**	208	1	1.2	86.4	77.2	-	-	-	-	-	-
Open	1.5	7.5	C621	**194202**	240	1	1.2	86.4	77.2	-	-	-	-	-	-
Open	1.5	5.6	H884	**115859**	208	3	1.15	66.4	78.6	-	-	-	-	-	-
Open	1.5	5	H884	**115859**	240	3	1.15	66.4	78.6	-	-	-	-	-	-
Open	1.5	2.8	H884	**115859**	480	3	1.15	66.4	78.6	-	-	-	-	-	-
Open	1.5	1.6	E1007	**158162**	575	3	1.15	85.3	86.3	CL00A310T-U	**151148**	RTA1-H	1.30	1.90	**151188**
Open	2	20.4	V102	**202581**	120	1	1.15	81.8	77.5	-	-	-	-	-	-
Open	2	10	V102	**202581**	208	1	1.15	81.8	77.5	-	-	-	-	-	-
Open	2	10.2	V102	**202581**	240	1	1.15	81.8	77.5	-	-	-	-	-	-
Open	2	7	H886	**159327**	208	3	1.15	67	0.79	-	-	-	-	-	-
Open	2	6.6	H886	**159327**	240	3	1.15	67	0.79	-	-	-	-	-	-
Open	2	3.5	H886	**159327**	480	3	1.15	67	0.79	-	-	-	-	-	-
Open	2	2.1	E1008	**158176**	575	3	1.15	86	84.8	CL00A310T-Y	**151149**	RTA1-J	1.90	2.70	**151189**
Open	3	14	B735	**111560**	208	1	1.15	94.5	80.3	CL02A310T-L	**151159**	RTA1-P	10.00	16.00	**151194**
Open	3	12.4	B735	**111560**	240	1	1.15	94.5	80.3	CL01A310T-S	**151152**	RTA1-P	10.00	16.00	**151194**
Open	3	9	H845	**159185**	208	3	1.15			-	-	-	-	-	-
Open	3	8.6	H845	**159185**	240	3	1.15			-	-	-	-	-	-
Open	3	4.3	H845	**159185**	480	3	1.15			-	-	-	-	-	-
Open	3	3.6	H954	**120019**	575	3	1.15	80.3	83.8	CL00A310T-Y	**151149**	RTA1-K	2.50	4.10	**151190**
Open	3	8.9	M3158	**152002**	208	3			80	-	-	-	-	-	-
Open	3	8	M3158	**152002**	240	3			80	-	-	-	-	-	-
Open	3	4	M3158	**152002**	480	3			80	-	-	-	-	-	-
Open	5	28	V211	**111562**	208	1	1.15	79.2	78.9	-	-	-	-	-	-
Open	5	26	V211	**111562**	240	1	1.15	79.2	78.9	-	-	-	-	-	-
Open	5	13.4	196033	**113371**	208	3	1.15	87.2	78.9	CL01A310T-L	**151155**	RTA1-P	10.00	16.00	**151194**
Open	5	13.2	196033	**113371**	240	3	1.15	87.2	85	CL01A310T-S	**151152**	RTA1-P	10.00	16.00	**151194**
Open	5	6.6	196033	**113371**	480	3	1.15	87.2	85	CL00A310T-1	**151275**	RTA1-M	5.50	8.50	**151192**
Open	5	5.4	H956	**120020**	575	3	1.15	85.9	85	CL00A310T-Y	**151149**	RTA1-L	4.00	6.30	**151191**

Blower Components (cont'd)

Belt-Driven Blower Motors and Motor Starters (cont'd)

Motors (cont'd)							Service	Power	Eff	Contactor	Reznor	Overload	o.l.	o.l.	Reznor
Type	HP	FLA	Model No.	P/N	volt	ph	Factor	Factor	%	GE#	P/N	GE#	min	max	P/N
TEFC	1/4	3.6	STOCK #904	**105566**	120	1	1			-	-	-	-	-	-
TEFC	1/4	2.2	108152	**16074**	208	1	1.35			-	-	-	-	-	-
TEFC	1/4	1.9	108152	**16074**	240	1	1.35			-	-	-	-	-	-
TEFC	1/4	1.6	125439	**16075**	208	3	1	61.9	72.1	-	-	-	-	-	-
TEFC	1/4	1.4	125439	**16075**	240	3	1	61.9	72.1	-	-	-	-	-	-
TEFC	1/4	0.7	125439	**16075**	480	3	1	61.9	72.1	-	-	-	-	-	-
TEFC	1/3	4.6	STOCK #906	**115861**	120	1	1	68.5	72.1	-	-	-	-	-	-
TEFC	1/3	2.3	C151	**159501**	208	1	1	67.2	69.5	-	-	-	-	-	-
TEFC	1/3	2.4	C151	**159501**	240	1	1	67.2	69.5	-	-	-	-	-	-
TEFC	1/3	1.2	H261	**105567**	208	3	1.15		79.5	CL00A310T-L	**151150**	RTA1-G	1.00	1.50	**151187**
TEFC	1/3	1.2	H261	**105567**	240	3	1.15		79.5	CL00A310T-S	**151147**	RTA1-G	1.00	1.50	**151187**
TEFC	1/3	0.6	H261	**105567**	480	3	1.15		79.5	CL00A310T-U	**151148**	RTA1-D	0.40	0.65	**151184**
TEFC	1/2	7.2	C613	**159184**	120	1	1.15			-	-	-	-	-	-
TEFC	1/2	3.5	C613	**159184**	208	1	1.15			-	-	-	-	-	-
TEFC	1/2	3.6	C613	**159184**	240	1	1.15			-	-	-	-	-	-
TEFC	1/2	2.3	H274	**16077**	208	3	1	59.5	74.8	-	-	-	-	-	-
TEFC	1/2	2	H274	**16077**	240	3	1	59.5	74.8	-	-	-	-	-	-
TEFC	1/2	1	H274	**16077**	480	3	1	59.5	74.8	-	-	-	-	-	-
TEFC	1/2	0.7	H276	**105568**	575	3	1.15	76.4	77	CL00A310T-J	**151146**	RTA1-F	0.65	0.90	**151186**
TEFC	3/4	11	F353	**115860**	120	1	1	66	65.7	-	-	-	-	-	-
TEFC	3/4	5.4	F353	**115860**	208	1	1	66	65.7	-	-	-	-	-	-
TEFC	3/4	5.5	F353	**115860**	240	1	1	66	65.7	-	-	-	-	-	-
TEFC	3/4	2	H580	**20371**	208	3	1	73.5	81.1	-	-	-	-	-	-
TEFC	3/4	2.2	H580	**20371**	240	3	1	73.5	81.1	-	-	-	-	-	-
TEFC	3/4	1.1	H580	**20371**	480	3	1	73.5	81.1	-	-	-	-	-	-
TEFC	3/4	0.8	H461	**105569**	575	3	1.15	78.3	82	CL00A310T-J	**151146**	RTA1-F	0.65	1.10	**151186**
TEFC	1	12	159105	**174993**	120	1	1.15	74.3	70.6	-	-	-	-	-	-
TEFC	1	6.2	159105	**174993**	208	1	1.15	74.3	70.6	-	-	-	-	-	-
TEFC	1	6	159105	**174993**	240	1	1.15	74.3	70.6	-	-	-	-	-	-
TEFC	1	3.3	H524	**16080**	208	3	1	74.4	80.2	-	-	-	-	-	-
TEFC	1	3.4	H524	**16080**	240	3	1	74.4	80.2	-	-	-	-	-	-
TEFC	1	1.7	H524	**16080**	480	3	1	74.4	80.2	-	-	-	-	-	-
TEFC	1	1.4	H525	**105570**	575	3	1.15	71.6	80.4	CL00A310T-J	**151146**	RTA1-G	1.00	1.50	**151187**
TEFC	1.5	16.4	311P402	**94347**	120	1				-	-	-	-	-	-
TEFC	1.5	9.5	311P402	**94347**	208	1				-	-	-	-	-	-
TEFC	1.5	8.2	311P402	**94347**	240	1				-	-	-	-	-	-
TEFC	1.5	4.3	H535	**101286**	208	3	1	80.9	82.4	-	-	-	-	-	-
TEFC	1.5	4.4	H535	**101286**	240	3	1	80.9	82.4	-	-	-	-	-	-
TEFC	1.5	2.2	H535	**101286**	480	3	1	80.9	82.4	-	-	-	-	-	-
TEFC	1.5	1.6	E127	**105665**	575	3	1.15	85.7	84	CL00A310T-J	**151146**	RTA1-H	1.30	1.90	**151188**
TEFC	2	24	K200	**105572**	120	1	1	76.4	75.7	-	-	-	-	-	-
TEFC	2	12	K200	**105572**	240	1	1	76.4	75.7	-	-	-	-	-	-
TEFC	2	7	E166	**158165**	208	3	1.15	77.5	84	CL00A310T-L	**151150**	RTA1-M	5.50	8.50	**151192**
TEFC	2	5.8	E166	**158165**	240	3	1.15	77.5	84	CL00A310T-S	**151147**	RTA1-L	4.00	6.30	**151191**
TEFC	2	2.9	E166	**158165**	480	3	1.15	77.5	84	CL00A310T-U	**151148**	RTA1-K	2.50	4.10	**151190**
TEFC	2	2.3	E169	**158166**	575	3	1.15	77.5	84	CL00A310T-Y	**151149**	RTA1-J	1.90	2.70	**151189**
TEFC	3	30	K222	**111564**	120	1	1	88	75.5	-	-	-	-	-	-
TEFC	3	15	K222	**111564**	240	1	1	88	75.5	-	-	-	-	-	-
TEFC	3	7.9	M3559T	**159330**	208	3	1.15		85.5	CL00A310T-L	**151150**	RTA1-N	5.50	8.50	**151192**
TEFC	3	7.2	M3559T	**159330**	240	3	1.15		85.5	CL00A310T-S	**151147**	RTA1-N	5.50	8.50	**151192**
TEFC	3	3.6	M3559T	**159330**	480	3	1.15		85.5	CL00A310T-1	**151275**	RTA1-K	2.50	4.10	**151190**
TEFC	3	3	B-M3559T-5	**111571**	575	3	1.15		85.5	CL00A310T-J	**151146**	RTA1-K	2.50	4.10	**151190**

Belt Drive Components

Motor HP	Open Mtr AL Opt	Voltage AK Opt (Key, top left, pg 11.)	Drive AM Option (Key, btm left, pg 11.)	Motor Pulley			Blower Pulley			Type and Average Length*
				P/N	Model	Bore	P/N	Model	Bore	
1/4, 1/3	2, 3	AK1, AK2, AK3, AK5, AK6, AK7	1, 2	**4074**	1VL34	1/2	**111609**	AK 99	1	"A-section" 3.8 ft
			3, 4	**13491**	1VL40	1/2	**111609**	AK 99	1	"A-section" 3.8 ft
			5, 6, 7	**13491**	1VL40	1/2	**19111**	AK 84	1	"A-section" 3.8 ft
			8, 9, 10, 11, 12	**13491**	1VL40	1/2	**18797**	AK 64	1	"A-section" 3.8 ft
			13, 14, 15, 16, 17	**13491**	1VL40	1/2	**135200**	AK 51	1	"A-section" 3.8 ft

Key to AK Nos.

	AK Voltage
1	115/1
2	208/1
3	230/1
5	208/3
6	230/3
7	460/3
8	575/3

Key to AM Nos.

	AM No./RPM
2	451-500
3	501-550
4	551-600
5	601-650
6	651-700
7	701-750
8	751-800
9	801-850
10	851-900
11	901-950
12	951-1000
13	1001-1050
14	1051-1100
15	1101-1150
16	1151-1200
17	1201-1250

NOTE: Pulleys require keyseats, see **Code 46**, page 8.

Motor HP	Open Mtr AL Opt	Voltage AK Opt (Key, top left.)	Drive AM Option (Key, btm left.)	Motor Pulley			Blower Pulley			Type and Average Length*
				P/N	Model	Bore	P/N	Model	Bore	
1/2, 3/4, 1, 1 1/2	4, 5, 6, 7	AK1, AK2, AK3, AK5, AK6, AK7	1, 2	**13580**	1VL34	5/8	**111609**	AK 99	1	"A-section" 3.8 ft
			3, 4	**7962**	1VL40	5/8	**111609**	AK 99	1	"A-section" 3.8 ft
			5, 6, 7	**7962**	1VL40	5/8	**19111**	AK 84	1	"A-section" 3.8 ft
			8, 9, 10, 11, 12	**7962**	1VL40	5/8	**18797**	AK 64	1	"A-section" 3.8 ft
			13, 14, 15, 16, 17	**7962**	1VL40	5/8	**135200**	AK 51	1	"A-section" 3.8 ft
1/2, 3/4	4, 5	AK8	1, 2	**13580**	1VL34	5/8	**111609**	AK 99	1	"A-section" 3.8 ft
			3, 4	**7962**	1VL40	5/8	**111609**	AK 99	1	"A-section" 3.8 ft
			5, 6, 7	**7962**	1VL40	5/8	**19111**	AK 84	1	"A-section" 3.8 ft
			8, 9, 10, 11, 12	**7962**	1VL40	5/8	**18797**	AK 64	1	"A-section" 3.8 ft
			13, 14, 15, 16, 17	**7962**	1VL40	5/8	**135200**	AK 51	1	"A-section" 3.8 ft
1, 1-1/2	6, 7	AK8	1, 2	**110125**	1VP34	7/8	**111609**	AK 99	1	"A-section" 3.8 ft
			3, 4	**106748**	1VL40	7/8	**111609**	AK 99	1	"A-section" 3.8 ft
			5, 6, 7	**106748**	1VL40	7/8	**19111**	AK 84	1	"A-section" 3.8 ft
			8, 9, 10, 11, 12	**106748**	1VL40	7/8	**18797**	AK 64	1	"A-section" 3.8 ft
			13, 14, 15, 16, 17	**106748**	1VL40	7/8	**135200**	AK 51	1	"A-section" 3.8 ft
2	8	AK1, AK2, AK3	1, 2	**13580**	1VL34	5/8	**111609**	AK 99	1	"A-section" 3.8 ft
			3, 4	**7962**	1VL40	5/8	**111609**	AK 99	1	"A-section" 3.8 ft
			5, 6, 7	**7962**	1VL40	5/8	**19111**	AK 84	1	"A-section" 3.8 ft
			8, 9, 10, 11, 12	**7962**	1VL40	5/8	**18797**	AK 64	1	"A-section" 3.8 ft
			13, 14, 15, 16, 17	**7962**	1VL40	5/8	**135200**	AK 51	1	"A-section" 3.8 ft
		AK5, AK6, AK7, AK8	1, 2	**110125**	1VP34	7/8	**111609**	AK 99	1	"A-section" 3.8 ft
			3, 4	**106748**	1VL40	7/8	**111609**	AK 99	1	"A-section" 3.8 ft
			5, 6, 7	**106748**	1VL40	7/8	**19111**	AK 84	1	"A-section" 3.8 ft
			8, 9, 10, 11, 12	**106748**	1VL40	7/8	**18797**	AK 64	1	"A-section" 3.8 ft
			13, 14, 15, 16, 17	**106748**	1VL40	7/8	**135200**	AK 51	1	"A-section" 3.8 ft
3	9	AK2, AK3	9, 10, 11, 12	**7962**	1VL40	5/8	**202652**	AK124	1	"A-section" 3.8 ft
			13, 14, 15, 16, 17	**7962**	1VL40	5/8	**202653**	AK94	1	"A-section" 3.8 ft
3, 5	9, 10	AK5, AK6, AK7, AK8	9, 10, 11, 12	**106748**	1VL40	7/8	**101414**	BK130	1	"B-section" 3.8 ft
			13, 14, 15, 16, 17	**106748**	1VL40	7/8	**202654**	BK105	1	"B-section" 3.8 ft

* Assume 17 Fenner belt links per foot. One "A" belt link is **P/N 201809.** "B" link is **P/N 202655.**

Motor HP	TEFC Mtr AL Opt	Voltage AK Opt (Key, top left)	Drive AM Opt (Key, btm left)	Motor Pulley			Blower Pulley			Type and Average Length*
				P/N	Model	Bore	P/N	Model	Bore	
1/4	19	AK1	1, 2	**4074**	1VL34	1/2	**111609**	AK 99	1	"A-section" 3.8 ft
			3, 4	**13491**	1VL40	1/2	**111609**	AK 99	1	"A-section" 3.8 ft
			5, 6, 7	**13491**	1VL40	1/2	**19111**	AK 84	1	"A-section" 3.8 ft
			8, 9, 10, 11, 12	**13491**	1VL40	1/2	**18797**	AK 64	1	"A-section" 3.8 ft
			13, 14, 15, 16, 17	**13491**	1VL40	1/2	**135200**	AK 51	1	"A-section" 3.8 ft
		AK2, AK3, AK5, AK6, AK7	1, 2	**13580**	1VL34	5/8	**111609**	AK 99	1	"A-section" 3.8 ft
			3, 4	**7962**	1VL40	5/8	**111609**	AK 99	1	"A-section" 3.8 ft
			5, 6, 7	**7962**	1VL40	5/8	**19111**	AK 84	1	"A-section" 3.8 ft
			8, 9, 10, 11, 12	**7962**	1VL40	5/8	**18797**	AK 64	1	"A-section" 3.8 ft
			13, 14, 15, 16, 17	**7962**	1VL40	5/8	**135200**	AK 51	1	"A-section" 3.8 ft
1/3	20	AK1, AK2, AK3, AK5, AK6, AK7	1, 2	**4074**	1VL34	1/2	**111609**	AK 99	1	"A-section" 3.8 ft
			3, 4	**13491**	1VL40	1/2	**111609**	AK 99	1	"A-section" 3.8 ft
			5, 6, 7	**13491**	1VL40	1/2	**19111**	AK 84	1	"A-section" 3.8 ft
			8, 9, 10, 11, 12	**13491**	1VL40	1/2	**18797**	AK 64	1	"A-section" 3.8 ft
			13, 14, 15, 16, 17	**13491**	1VL40	1/2	**135200**	AK 51	1	"A-section" 3.8 ft
1/2, 3/4, 1	21, 22, 23	AK1, AK2, AK3, AK5, AK6, AK7, AK8	1, 2	**13580**	1VL34	5/8	**111609**	AK 99	1	"A-section" 3.8 ft
			3, 4	**7962**	1VL40	5/8	**111609**	AK 99	1	"A-section" 3.8 ft
			5, 6, 7	**7962**	1VL40	5/8	**19111**	AK 84	1	"A-section" 3.8 ft
			8, 9, 10, 11, 12	**7962**	1VL40	5/8	**18797**	AK 64	1	"A-section" 3.8 ft
			13, 14, 15, 16, 17	**7962**	1VL40	5/8	**135200**	AK 51	1	"A-section" 3.8 ft
1 1/2	24	AK1, AK2, AK3, AK5, AK6, AK7	1, 2	**13580**	1VL34	5/8	**111609**	AK 99	1	"A-section" 3.8 ft
			3, 4	**7962**	1VL40	5/8	**111609**	AK 99	1	"A-section" 3.8 ft
			5, 6, 7	**7962**	1VL40	5/8	**19111**	AK 84	1	"A-section" 3.8 ft
			8, 9, 10, 11, 12	**7962**	1VL40	5/8	**18797**	AK 64	1	"A-section" 3.8 ft
			13, 14, 15, 16, 17	**7962**	1VL40	5/8	**135200**	AK 51	1	"A-section" 3.8 ft
		AK8	1, 2	**110125**	1VP34	7/8	**111609**	AK 99	1	"A-section" 3.8 ft
			3, 4	**106748**	1VL40	7/8	**111609**	AK 99	1	"A-section" 3.8 ft
			5, 6, 7	**106748**	1VL40	7/8	**19111**	AK 84	1	"A-section" 3.8 ft
			8, 9, 10, 11, 12	**106748**	1VL40	7/8	**18797**	AK 64	1	"A-section" 3.8 ft
			13, 14, 15, 16, 17	**106748**	1VL40	7/8	**135200**	AK 51	1	"A-section" 3.8 ft

(continued)

Blower Components (cont'd)

Belt Drive Components (cont'd)

Motor HP	TEFC Mtr / AL Opt	Voltage AK Opt (Key, top left)	Drive AM Opt (Key, btm left)	Motor Pulley P/N	Motor Pulley Model	Motor Pulley Bore	Blower Pulley P/N	Blower Pulley Model	Blower Pulley Bore	Type and Average Length*
2	25	AK5, AK6, AK7, AK8	1, 2	**110125**	1VP34	7/8	**111609**	AK 99	1	"A-section" 3.8 ft
			3, 4	**106748**	1VL40	7/8	**111609**	AK 99	1	"A-section" 3.8 ft
			5, 6, 7	**106748**	1VL40	7/8	**19111**	AK 84	1	"A-section" 3.8 ft
			8, 9, 10, 11, 12	**106748**	1VL40	7/8	**18797**	AK 64	1	"A-section" 3.8 ft
			13, 14, 15, 16, 17	**106748**	1VL40	7/8	**135200**	AK 51	1	"A-section" 3.8 ft
3	26	AK5, AK6, AK7, AK8	9, 10, 11, 12	**106748**	1VL40	7/8	**101414**	BK130	1	"B-section" 3.8 ft
			13, 14, 15, 16, 17	**106748**	1VL40	7/8	**202654**	BK105	1	"B-section" 3.8 ft

* Assume 17 Fenner belt links per foot. One "A" belt link is **P/N 201809.** One "B" link is **P/N 202655.**

Optional Belt and Blower Guards - Blower Models

Code	Description	Size 25	Size 50/75/100	Size 125	Size 130/165	Size 200/250/300/400
50	Guard Package (Same as Option CD10) for Sizes 50-400 with Belt Driven Motors	--	**101539**		**101540**	**101541**
51	Guard Package (Same as Option CD12) for Sizes 25-100 with Direct Drive Motor	**114548**	**114548**	--	--	--
Components:						
52	Belt Guard - in Option CD10 and AZ6	--	**193796**		**193797**	**193795**
53	Contactor Mounting Bracket (not illustrated) - in Option CD10	--	**101405**		--	--
54	Blower Inlet Guard - in Options CD10, CD12, AZ6, and AZ7	**102474**			**102475**	

Codes 186 and 187 - Guard Option Packages

52 Belt Guard

54 Blower Guard

Heat Exchangers

A gasket kit is included with replacement heat exchangers for Model B and BE heaters. If a new burner rack support is required, order P/N listed. Burner rack supports manufactured prior to 8/91 (Serial No. Date CodeAQH) were not indexed.

Code	Description			Size 25	50	75	100	125	130	165	200	250	300	400
60	Heat Exchanger Assembly	Aluminized	F/FE	**102282**	**102283**	**102284**	**102285**	**132743**	**102286**	**102287**	**102288**	**102289**	**102290**	**102291**
			B/BE	**173823**	**173824**	**173825**	**173826**	**173827**	**173828**	**173829**	**173830**	**173831**	**173832**	**173833**
		409 Stainless	F/FE	**102311**	**102312**	**102313**	**102314**	**132745**	**102315**	**102316**	**102317**	**102318**	**102319**	**102320**
			B/BE	**173834**	**173835**	**173836**	**173837**	**173838**	**173839**	**173840**	**173841**	**173842**	**173843**	**173844**
60A	Gasket Kit ***included*** in Replacement Heat Exchangers for blower models. Kit includes five self-adhesive gasket strips, a tube of sealant and instructions.			**102280**					**102281**					
61	Indexed Burner Rack Support			**113936**								**113937**		

Code 60 - Heat Exchanger

Code 60A

P/N 113937 - Burner Rack Support for Sizes 250-400

(Same as Code 66 on page 13)

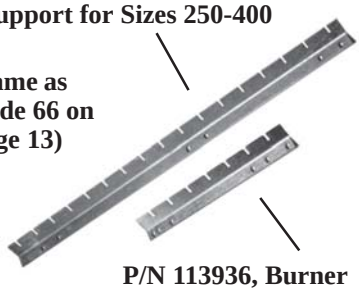

P/N 113936, Burner Rack Support for Sizes 25-200

Burner Rack and Components

Code	Description		Size										
			25	50	75	100	125	130	165	200	250	300	400
64	Burner Rack Assembly - Aluminized (includes burners and flash carryover; less pilot; less manifold and orifices; and less valve)		98983	98984	98985	98986	132753	98987	98988	98989	98990	98991	98992
	Burner Rack Assembly - Stainless Steel (includes burners and flash carryover; less pilot; less manifold and orifices; and less valve)		98993	98994	98995	98996	132755	98997	98998	98999	99000	99001	99002
64A	Burner only - Aluminized		94777					94781					
	(qty of burners per Size in parenthesis)		(2)	(3)	(4)	(5)	(6)	(4)	(5)	(6)	(8)	(9)	(12)
	Burner only - Stainless Steel		97345					97348					
	(qty of burners per Size in parenthesis)		(2)	(3)	(4)	(5)	(6)	(4)	(5)	(6)	(8)	(9)	(12)
65	Carryover Assembly		96769	47690	63128	96042	96044	96043	96042	96044	--	--	--
65A	Right Carryover Assembly		--	--	--	--	--	--	--	--	96045	96046	96045
65B	Left Carryover Assembly		--	--	--	--	--	--	--	--	96047	96047	96047
65C	Center Carryover Assembly		--	--	--	--	--	--	--	--	--	--	63156
66	Burner Rack Support		113936								113937		
67	Manifold only, less orifices, less valve		95434	95435	95436	95437	95440	95436	95437	95440	95441	95442	95443
68	Manifold with Natural Gas Burner Orifices for sea level* operation (less valve)		99003	99004	99005	99006	132749	99007	99008	99009	99010	99011	99012
	Manifold with Propane Gas Burner Orifices for sea level* operation (less valve)		99013	99014	99015	99016	132751	99017	99018	99019	99020	99021	99022
69	Burner Orifices		See chart on page 14.										
70	Pilot Shield (FE and BE Models and F and B Models with optional spark pilot)		97204										
71	Air Shutter Assembly (Same as Option ED1)		98476	98477	98478	98479	98480	98478	98479	98480	98481	98482	98483
72	Shut-off Valve with Union	1/2"	196910										
	(Same as CE Option)	3/4"	--	--	--	--	--	--	--	--	--	196911	

* A manifold with "sea level" orifices also applies if the manifold pressure has been adjusted in the field for high altitude operation (check for manifold adjustment label). If the heater was factory equipped for high altitude operation (Option AB), select high altitude orifices separately from the chart on page 14. Check the heater rating plate to identify the elevation at which the heater was manufactured to operate.

Code 64 - Burner Rack Assembly (Less pilot, manifold, orifices, and valve)

Code 64A - Burner Only

Code 65 - Carryover assembly

Code 67 - Manifold (less orifices)

Code 68 - Manifold with Orifices
Code 69 - Burner Orifices

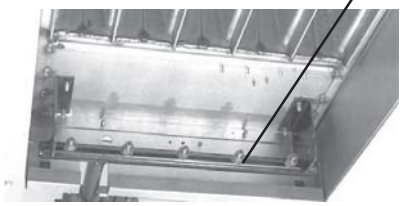

Code 70 - Pilot Shield

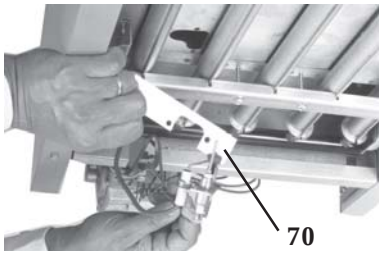

Code 71 - Air Shutter Assembly

Code 72 - Shutoff Valve with Union

1/2" Valve with Union, P/N 196910

3/4" Valve with Union, P/N 196911

Burner Rack Components (cont'd)

Code	Description	Size 25	50	75	100	125	130	165	200	250	300	400
69	**Burner Orifices (quantity in parenthesis)**	***Use extreme care in selecting replacement burner orifices***										
		(2)	(3)	(4)	(5)	(6)	(4)	(5)	(6)	(8)	(9)	(12)
	Natural Gas Orifices for a unit whose rating plate indicates sea level operation (0-2000 ft) even if the manifold pressure has been adjusted for high altitude operation - U.S.A. & Canada	**39650** #51	**84853** #47	**38678** #45	**11833** #44	#44	**11831** #35	#35	#35	#35	#35	#35
	Propane Gas Orifices for a unit whose rating plate indicates sea level operation (0-2000 ft) even if the manifold pressure has been adjusted for high altitude operation - U.S.A. & Canada	**95936** #60	**63003** #1.2MM	**64676** #1.3MM	**11830** #55	#55	**96344** #1.65MM	#1.65MM	#1.65MM	#1.65MM	#1.65MM	#1.65MM
	Orifices for factory-equipped high altitude (check the rating plate)											
	2001-4500 ft, Natural Gas - Canada	**51284** #52	**39651** #49	**84853** #47	**38678** #45	#45	**11835** #37	#37	#37	#37	#37	#37
	2001-4500 ft, Propane Gas - Canada	**97534** #62	**63922** #1.15MM	**97359** #1.25MM	**11830** #55	#55	**61653** #1.55MM	#1.55MM	#1.55MM	#1.55MM	#1.55MM	#1.55MM
	2001-3000 ft, Natural Gas - U.S.A.	**39650** #51	**40414** #48	**16590** #46	**38678** #45	#45	**97362** #36	#36	#36	#36	#36	#36
	2001-3000 ft, Propane Gas - U.S.A.	**97355** #61	**39658** #56	**97359** #1.25MM	**11830** #55	#55	**51284** #52	#52	#52	#52	#52	#52
	3001-4000 ft, Natural Gas - U.S.A.	**51284** #52	**40414** #48	**84853** #47	**38678** #45	#45	**97362** #36	#36	#36	#36	#36	#36
	3001-4000 ft, Propane Gas - U.S.A.	**97355** #61	**63922** #1.15MM	**97359** #1.25MM	**11830** #55	#55	**61653** #1.55MM	#1.55MM	#1.55MM	#1.55MM	#1.55MM	#1.55MM
NOTE: All power vented models over 4000 ft also require high altitude venter pressure switch (Code 93B).												
	4001-5000 ft, Natural Gas - U.S.A.	**51284** #52	**39651** #49	**84853** #47	**38678** #45	#45	**11835** #37	#37	#37	#37	#37	#37
	4001-5000 ft, Propane Gas - U.S.A.	**97354** #62	**63922** #1.15MM	**97359** #1.25MM	**11830** #55	#55	**61653** #1.55MM	#1.55MM	#1.55MM	#1.55MM	#1.55MM	#1.55MM
	5001-6000 ft, Natural Gas - U.S.A.	**51284** #52	**39651** #49	**84853** #47	**16590** #46	#46	**11835** #37	#37	#37	#37	#37	#37
	5001-6000 ft, Propane Gas - U.S.A.	**40415** #63	**63922** #1.15MM	**63003** #1.2MM	**39658** #56	#56	**9789** #53	#53	#53	#53	#53	#53
	6001-7000 ft, Natural Gas - U.S.A.	**51284** #52	**39651** #49	**40414** #48	**84853** #47	#47	**45870** #38	#38	#38	#38	#38	#38
	6001-7000 ft, Propane Gas - U.S.A.	**40415** #63	**40416** #57	**63003** #1.2MM	**39658** #56	#56	**9789** #53	#53	#53	#53	#53	#53
	7001-8000 ft, Natural Gas - U.S.A.	**9789** #53	**39652** #50	**40414** #48	**84853** #47	#47	**45871** #39	#39	#39	#39	#39	#39
	7001-8000 ft, Propane Gas - U.S.A.	**97352** #64	**40416** #57	**63922** #1.15MM	**39658** #56	#56	**9789** #53	#53	#53	#53	#53	#53
	8001-9000 ft, Natural Gas - U.S.A.	**9789** #53	**39652** #50	**39651** #49	**40414** #48	#48	**87391** #40	#40	#40	#40	#40	#40
	8001-9000 ft, Propane Gas - U.S.A.	**97352** #64	**40416** #57	**63922** #1.15MM	**39658** #56	#56	**61652** #1.45MM	#1.45MM	#1.45MM	#1.45MM	#1.45MM	#1.45MM

Pilots

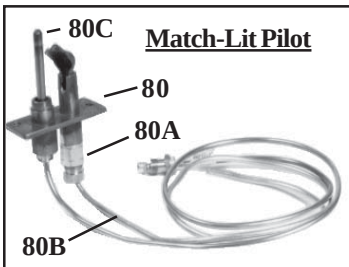

Match-Lit Pilot

P/N 110851 - *Complete* replacement pilot for natural gas, match lit pilot (includes Code 80 for natural gas and 81)

P/N 110852 - *Complete* replacement pilot for propane gas, match lit pilot (includes Code 80 for propane gas and Code 81)

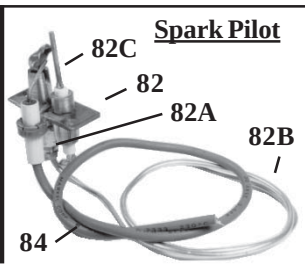

Spark Pilot

P/N 110853 - *Complete* replacement pilot kit for natural gas, spark pilot (includes Code 82 for natural gas, 83, and 84)

P/N 110854 - *Complete* replacement pilot kit for propane gas, spark pilot (includes Code 82 for propane gas, 83, and 84)

Code	P/N	Component Description
80	**96360**	Pilot Assembly, **Natural Gas**, with orifice, pilot tubing, thermocouple, and one compression fitting - Johnson #J994HKA-9731-715
	96361	Pilot Assembly, **Propane Gas**, with orifice, pilot tubing, thermocouple, and one compression fitting - Johnson #J994HKA-9733-410
80A	**103034**	Orifice only, **Natural Gas**, Johnson #9731-715 (brass)
	98695	Orifice only, **Propane Gas**, Johnson #9733-410 (black)
80B	**98698**	Pilot Tubing, Johnson #B10499-995-11, 1/8" O.D. x 18" long
81	**97572**	Compression Fitting, #FTG75
80C	**84761**	Thermocouple, 24", #K15FA-24D

NOTE: Match-Lit Pilots are used on Model F and B units with heater serial number safety pilot Code 31.

Code	P/N	Component Description
82	**97534**	Pilot Assembly, **Natural Gas,** with orifice, pilot tubing, flame rod, and one compression fitting (does not include flame sensor lead) - Johnson #J982HKW-9731-715
	97535	Pilot Assembly, **Propane Gas**, with orifice, pilot tubing, flame rod , and one compression fitting (does not include flame sensor lead) - Johnson #J982HKW-9733-410
82A	**103034**	Orifice only, **Natural Gas**, Johnson #9731-715 (brass)
	98695	Orifice only, **Propane Gas**, Johnson #9733-410 (black)
82B	**98698**	Pilot Tubing, Johnson #B10499-995-11, 1/8" O.C. x 18" long
83	**97572**	Compression Fitting, #FTG75
82C	**98697**	Flame Rod, Johnson #Y75AA-3
84	**97575**	Flame Sensor Lead, 21" (not illustrated)

NOTE: Spark Pilots are used on Model FE and BE units and Model F and B units with heater serial number safety pilot Codes 65 or 66.

Venters - Models FE and BE

Code	Description			Size						
				25/50/75	100	125	130	165/200/250	300	400
85	Venter Housing, DeStaco			**98172** #250C with 4" Collar		**131985** #250C with 5" Collar	**98173** #350C with 4" Collar	**101052** #350C with 5" Collar	**98175** #350C with 6" Collar	
						(Order Venter Gasket, Code 86, with housing for Sizes 125-400)				
86	Venter Gasket (must be ordered with **Code 85** for Sizes 125-400)			--	--	**97300**				
87	Venter Motor and Wheel Assy by supply voltage (less pressure switch and tubing.	115/1	FE	**97727**		**131986**	**97730**			
			BE	**97727**		**131986**	**97730**			--
		208/1	FE/BE	--	--	**133244**	**98369**			
		230/1	FE	--	**116102**	**133244**	**98369**			
			BE	--	--	--	**98369**			
		208/3	BE	--	--	--	**98369**			
		230/3	BE	--	--	--	**98369**			
		460/3	BE	--	--	--	**116280**			
		575/3	BE	--	--	--	**97730**			
87A	Venter Motor Only (by supply voltage)	115/1	FE	**148055** (replaces 97738) Magnetek JA1M213			**165700** (replaces 148053 and 97741) McMillan #229396/1			
			BE	**148055** (replaces 97738) Magnetek JA1M213			**148053** (replaces 97741) Magnetek JE1E024			--
		208/1	FE/BE	--	--	**148054**, Magnetek JE1E025 (replaces 98157)				
		230/1	FE	--	**148054** (replaces 98157), Magnetek JE1E025					
			BE	--	--	**148054** (replaces 98157), Magnetek JE1E025				
		208/3	BE	--	--	**148054** (replaces 98157), Magnetek JE1E025				
		230/3	BE	--	--	**148054** (replaces 98157), Magnetek JE1E025				
		460/3	BE	--	--	**115802**, Fasco #7162-3388				
		575/3	BE	--	--	**148053** (replaces 97741), Magnetek JE1E024				

Venter Assembly

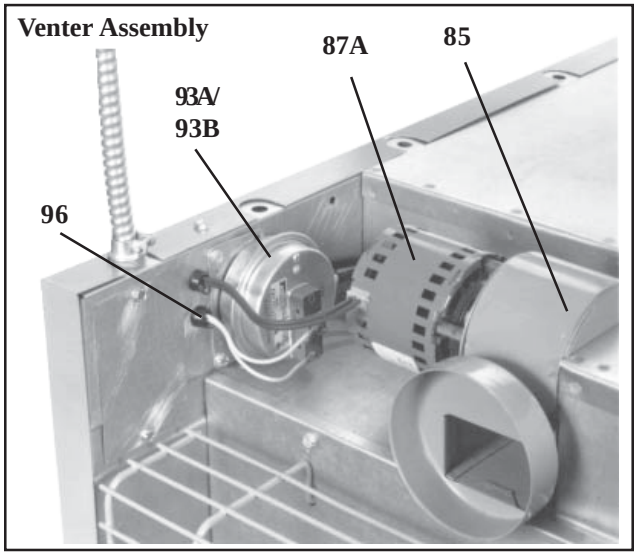

Code 86 - Venter Gasket, P/N 97300

Code 87 - Venter Motor and Wheel Assembly

Code 91 - Venter Fan Blade, P/N 68005

Code 92 - Capacitor, P/N 163894

Code	Description	Size					
		25/50/75/100	125	130	165/200	250	300/400
87B	Venter Wheel Only	**97725**, Beckett #12063	**131987**, Beckett V325-2035	**97724**, Brookside #FE400-200-2			
90	Motor Plate (not illustrated)	**68007**		**97301**			
91	Venter Fan Blade, 2-1/2"	**68005**					
92A	Capacitor	--	**163894** (replaces 87435 and 103181)				
92B	Capacitor Boot	--	--	--	**103182**		
93A	Pressure Switch Replacement Kit for **sea level to 4000 ft** elevation for Model FE/BE heaters mfgd **prior to 1/94** (Date Code ATA)	**196653**					
	Pressure Switch Replacement Kit for **above 4000 ft** elevation for Model FE/BE heaters mfgd **prior to 1/94** (Date Code ATA)	**196654**					

Venters - Models FE and BE (cont'd)

Code	Description	Size					
		25/50/75/100	125	130	165/200	250	300/400
93B	Pressure Switch for **sea level to 4000 ft elevation** for Model FE/BE heaters mfgd **beginning 1/94** (Date Code ATA)	**195316**					
	Pressure Switch for **above 4000 ft** elevation for Model FE/BE heaters mfgd **beginning 1/94** (Date Code ATA)	**195317**					
94	Sensing Tube Assy - heaters mfgd prior to 1/94	**97210**	--	**97208**			
	Sensing Tube Assy - heaters mfgd beginning 1/94	**129859**		**129860**			
95	Silicone Rubber Tubing - heaters mfgd prior to 1/94	(1)**123571** - 9-3/4"	--	(2) **98221** - 3-1/2"		(1) **98221** - 3-1/2"	
		(1)**123572** - 10-1/2"	--			(1)**113774** - 4"	
	Silicone Rubber Tubing - heaters mfgd beginning 1/94	(1)**130388** - 10"		(1)**130389** - 3"		(1)**131795** - 3-1/4"	
96	Strain Relief, Heyco #SR-5KN-5	**98393**					
97	RBM Relay (Essex #134-20102-101)	**98118**					
99	Vent Cap	**111848** - 4"	**111849** - 5"	**111848** - 4"	**111849** - 5"		**111850** - 6"
99	Flue Exhaust Tape (not illustrated)	**98266**, Aluminum Tape, 550°F, 1" x 10 yds (Same as Option FA1)					

Code 94 - Sensing tube Assy

used on heaters mfgd prior to 1/94

used on heaters mfgd beginning 1/94

Code 95 - Silicone Tubing

Two pieces required on heaters manufactured prior to 1/94; one piece required on heaters manufactured beginning 1/94.

Code 97 - RBM Relay, P/N 98118

Code 98 - Vent Cap

Optional Power Venter for Gravity-Vent Units - Models F and B

Code	Description		Size							
			25/50	75/100	125	130	165	200	250/300	400
100	**Power Venter Kits**									
	115 volt Venter, Venter Adapter and Parts Bag (Same as Option CA1 - includes two hanger bracket assemblies for converting fan units to 4-pt suspension.)		**98467**		**136862**	**98468**			**98471**	
	208 volt Venter, Venter Adapter and Parts Bag (Same as Option CA2 - includes two hanger bracket assemblies for converting fan units to 4-pt suspension.)		--	--	**135441**	**98469**			**98472**	
	230 volt Venter, Venter Adapter and Parts Bag (Same as Option CA3 - includes two hanger bracket assemblies for converting fan units to 4-pt suspension.)		--	--	**135442**	**98470**			**98473**	
Replacement Component Parts for Optional Power Venters										
101	Venter Assy including Blower and Motor and Wheel Assy	**115 volt**	**97976**						**97955**	
		208 volt	--	--	**97977**				**97956**	
		230 volt	--	--	**97978**				**97957**	
102	Blower Housing Assy		**6631**						**10529**	
103	Venter Motor and Wheel Assy	**115 volt**	**97980**						**97958**	
		208 volt	--	--	**97981**				**97959**	
		230 volt	--	--	**97982**				**97960**	
104	Time Delay Relay, **P/N 259518,** replacement for venter kits manufactured beginning 2/2010. For kits manufactured before 2/2010, order time delay replacement kit, **P/N 259521**. (Venters requring this kit will have a TI #6000060-17 time delay relay.)									
105	Sail Switch		**97908** Cemco #JMP-154 4B-A						**97907** Cemco #JMP 102-4B-C	

Code	Description		Size							
			25/50	75/100	125	130	165	200	250/300	400
106	Venter Motor	115 volt	**61069**, Fasco #7121-4861						**87434**, Fasco #7161-1775	
		208 volt	--	--	**30249**, Fasco #7162-0186					
		230 volt	--	--	**29571**, Fasco #7162-0158					
107	Venter Wheel		**29791**, Torrington #AA-326-215-1						**29792**, Torrington #AA408-228-1	
108	Fan Blade, 3", RHF-0.3125 Bore		29793							
109A	Capacitor		--	--	--	--	--	--	**163894** (replaces 103181)	
109B	Capacitor Boot, Sysntex #147-78		--	--	--	--	--	--	**103182**	
110	Venter Adapter Assembly		**97823**		**146094**	**97824**			**97825**	
111	Parts Bag for installing all Option CA Power Venters (See component list below)		97966							
111A	Flue Restrictor (not illustrated, included in Code 111)		**98665** 2-3/4x6	**98664** 2x6	**97943** 1x7	**97944** 1-1/2x7-3/4	**97943** 1x7	None	**97944** 1-1/2x 7-3/4	None
112	Conduit Connector, Tinnerman		(2) **97941**							
113	Flexible Conduit, 5/16" x 24"		(2) **17950**							
114	Vent Cap for gravity vent with optional power vent. Vent caps are not included with the venter kit.		**111848** - 4"						**111850** - 6"	
115	Flue Exhaust Tape (not illustrated and not included with Option kit)		**98266**, Aluminum tape 550°F, 1" x 10 yds							

Code 100 - Power Venter Kit
(Parts Bag Not Illustrated - See Code 111)

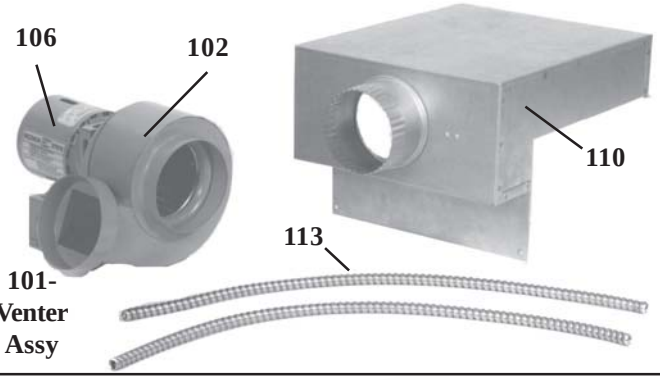

Code 105 - Sail Switch

Code 107 - Venter Wheel

Code 108 - Venter Fan Blade

Code 109A - Capacitor, P/N 163894

Code 112 - Conduit Connector
Code 113 - Flexible Conduit

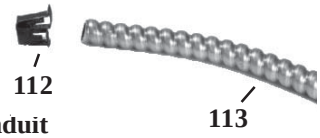

Code 111 Parts Bag

Parts Bag, **P/N 97966**, is standardized for all sizes of power venters. It contains all of the items required for any installation and may include parts that are not used. The parts in **bold type** should always be used. Each parts bag includes:

Qty	P/N	Description
2	96386	Hanger Assembly
1	**98364**	**Brown Wire Assembly**
2	**97941**	**Conduit Connector, Tinnerman #C54882-017**
13	**16354**	**Twist-on Wire Connector, Ideal #3-0273**
11	**11813**	**Sheetmetal Screws, #10 x 1/2"**
1	**16199**	**Box Connector, %&B #253**
1	**1417**	**90° Box Connector**
2	**16358**	**Anti-Short Bushing (red)**
1	**91453**	**Orange Wire, 18 Gauge x 60", 105°C**
1	**38463**	**Yellow Wire, 18 Gauge x 60", 105°C**
1	**38464**	**Brown Wire, 18 Gauge x 60", 105°C**
1	**3841**	**Black Wire, 18 Gauge x 36", 105°C**
1	**87880**	**White Wire, 18 Gauge x 36", 105°C**
1	**38462**	**Blue Wire 18 Gauge x 60", 105°C**
2	**148086**	**Open/Closed Bushing, Heyco #OCB625**
1	97843	Restrictor, 1" Wide
1	97944	Restrictor, 1-1/2" Wide
1	98664	Restrictor, 2" Wide
1	99665	Restrictor, 2-3/4" Wide
2	16355	Wire Nuts (used for field connection on blower models)
1	**103171**	**Warning Label**

NOTE: Vent Cap size **required** for gravity vent models **with optional power vent** is listed as Code 114 in the table above.

Vent cap size and part number of cap for use with **standard gravity vent model** (**without power vent**) is listed in the table below.

Code 114 - Vent Cap
(Same type of vent cap applies to both applications.)

*Run 7" vent pipe and use a field-supplied increaser with an 8" vent cap.

F&B Size	Vent Cap Diameter	P/N
25-50	4"	**111848**
75	5"	**111849**
100	6"	**111850**
125, 130	* 8"	**61857**
165, 200	8"	**61857**
250, 300	10"	**61866**
400	12"	**61875**

Electrical Components

Code	Description		Size								
			25	50	75/100	125	130/165	200	250	300	400
120	ECO Limit Control *Beginning 8/99, Models FE and BE and Models F and B with optional spark pilot ***do not have*** an ECO limit control	F/FE*	131449 Thermodisc #G4AP0202110C, 109°C (replaces 96513)		**82414** Thermodisc #G4AP0200152C, 152°C						
		B/BE*			**131450** Thermodisc #G5AP0201152C, 152°C (replaces 82414 on blower heaters)						
121	Limit Control - heaters mfgd beginning 9/96	FE	**85449** 200°F		**85449** 200°F		**82091** 160°F	**85449** 200°F	**45602** 180°F		
		F	**85449** 200°F			**45602** 180°F	**82091** 160°F	**85449** 200°F	**45602** 180°F		
		BE	**45602** 180°F			**100799** 150°F					
		B	**45602** 180°F	**85449** 200°F		**100799** 150°F					
	Limit Control - heaters mfgd prior to 9/96	FE	**85449** 200°F		**85449** 200°F		**82091** 160°F	**85449** 200°F	**45602** 180°F		
		F	**85449** 200°F		**45602** 180°F		**82091** 160°F	**85449** 200°F	**45602** 180°F		
		BE	**45602** 180°F			**100799** 150°F					
		B	45602 180°F			100799 150°F					
122 (See Note below)	Fan Control, Thermodisc #60T12 with Bracket	F/FE	**123974** 105/135°F (replaces 96387)	**123976** 95/135°F (replaces 114009)				**123974** 105/135°F (replaces 96387)			
		B/BE	**123975**, 95/150°F (replaces 100857)								
123	Summer/Winter Switch Assembly (Same as as Option CH1)	F/FE	**98484** (Includes McGill #TS-71-6A Switch and Wiring)								**98485** (McGill #1010L Switch and Wiring)
		B/BE	**101679**, (Includes McGill #TS-71-6A Switch, Relay, and Wiring)								
124	2-Screw Terminal Strip for 24V Connections		**96041**								
125	4-Screw Terminal Strip for 24V Connections		**96511**								
126	RBM Relay		**98118** (Essex #134-201-02-101) (standard for BE or FE venter; included in 2-stage control options)								
127	Time Delay Relay		--	--	**97479**, Thermodisc #305048						

NOTE: Temperature settings on the current replacement fan controls are different from the previous models because of a change in construction of the switch. However, these controls are interchangeable and will perform a nearly identical control function.

Code 120 - ECO Device

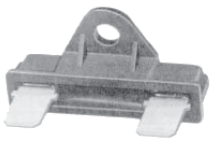

Code 121 - Limit Control, Automatic Reset

Code 122 - Fan Control Assembly

Code 123 - Summer/ Winter Switch

Code 124 - Two-Screw Terminal Strip Connector, P/N 96041

Code 125 - Four-Screw Terminal Strip Connector, P/N 96511

Code 126 - RBM Relay, P/N 98118

Code 127 - Time Relay Delay, P/N 97479

Code	Description	Size					
		25	50	75/100	125	130/165/200	250/300/400
128A	Blocked Vent Switch, Thermodisc #36Tx46, 1/2" Snap Disk, manual reset, 1/4" QC (standard on gravity-vent models beginning April 1991 - Applies to Standard single units only (See Code 100B, Gasket)	**112751** Setting Open @ 200°F #6215	**112752** Setting Open @ 225°F #6217	**121275** Setting Open @ 275°F #6279			
	Blocked Vent Switch, Thermodisc #36Tx46, 1/2" Snap Disk, manual reset, 1/4" QC (standard on gravity-vent models beginning April 1991 - Applies to optional two-stage units only (See Code 100B, Gasket)	--	--	**112752** Setting Open @ 225°F #6217			
128B	Blocked Vent Gasket - for heaters with single-stage	--	(2)**121341**	--	--	--	--
	Blocked Vent Gasket - for heaters with optional two-stage controls	--	--	(1) **121341**	--	(1) **121341**	--
129	Circuit Breaker W58XB1A4A8 (Fusible disconnect Option AI1)	**146831**					
130	On/Off Switch, McGill 4125-0004	**146830**					

Code 128A - Blocked Vent Switch

Code 129 - Circuit Breaker, P/N 146831

Code 130 - On/Off Switch, P/N 146830

Code 131 - Fuse/Fuse Holder for Blower Units with Optional 575 Volt

Fuse, 2.5 amp, 2501, #3120, **P/N 60242**

Fuse Holder, Buss HTB-481, **P/N 60241**

Code	Description	P/N	Used on Models
Control Transformers			
132	115/1/60, 12VA, Basler #BE141615-RAD	**131988** (replaces 102706)	F 25-400 Single-Stage, March-Lit Pilot B 25-300 Single-Stage, Match-Lit Pilot
	115/1/60, 20VA, Basler #BE141620-RAD	**132204** (replaces 102709)	FE 25-400 Single Stage, Spark Pilot BE 25-300 Single-Stage, Spark Pilot
			F 25-400 Single Stage, Spark Pilot B 25-300 Single-Stage, Spark Pilot
			F 75-400 Two-Stage, Match-Lit Pilot B 75-300 Two-Stage, Match-Lit Pilot
			BE 400 Two-Stage, Spark Pilot
			B and BE 400 with Optional 575 3ph/60Hertz
	115/1/60, 35VA, Basler #BE141640-RAK	**102708** (replaces 96507)	F 75-400 Two-Stage, Spark Pilot B 75-300 Two-Stage, Spark Pilot
			FE 75-400 Two-Stage, Spark Pilot BE 75-300 Two-Stage, Spark Pilot
	208/230/1/60; 208/230/3/60; 35VA, Basler #BE21537004	**103500** (replaces 96508)	B 400 Single-Stage, Match-Lit Pilot B 400 Two-Stage, Match-Lit Pilot B 400 Single-Stage, Spark Pilot B 400 Two-Stage, Spark Pilot
			BE 400 Single-Stage, Spark Pilot
			F 130-400 with Optional 208/230V/1Ph/60 Hertz FE 130-400 with Optional 208/230V/1Ph/60 Hertz B 50-400 with Optional 208/230V/1Ph/60 Hertz BE 50-400 with Optional 208/230V/1Ph/60 Hertz F 25-400 with Optional 230V/1Ph/50 Hertz
			B 75-400 with Optional 208/230V/3Ph/60 Hertz BE 130-400 with Optional 208/230V/3Ph/60 Hertz
	460/3/60, 35VA, Basler #BE641640-RAK	**103495** (replaces 96509)	B 75-400 with Optional 460V/3Ph/60 Hertz BE 130-400 with Optional 460V/3Ph/60 Hertz
	600/3/60, 1/4 KVA, Type HSD, Primary/120-240V Secondary, Hevi-Duty	**113556**	B/BE 130-400 with Optional 575V/3Ph/60 Hertz

Control Transformer

Code 133 - Automatic Vent Damper with 8' Wiring Harness for Model F and B (Same as Option AV7; requires ignition controller with lockout - see Code 136B, page 20)

F/B Size	Vent	P/N
25, 50	4"	**234005**
75	5"	**234006**
100	6"	**234007**
125	7"	**234008**
165, 200	8"	**234009**
250, 300	10"	**234010**
400	12"	**234011**

Electrical Components (cont'd)

Code 134 - Low Ambient Fan Control Relay Kit, P/N 113779

Kit Components:		
Qty	P/N	Description
1	114007	Time Delay Relay Assembly (pre-wired consisting of Time Delay Relay Thermodisc #305055, P/N 97479, and four wire assemblies)
2	82485	Screws, #4 x 3/8" long (for attaching relay assy)
1	16354	Wire Nut
1	98117	Open/Closed Bushing

Application: The low ambient fan control relay kit is designed to prevent false cycling of the fan/blower on unit heaters installed in areas with ambient temperature of less than 40°F.

Code 135 - Optional Multiple Heater Control Kits

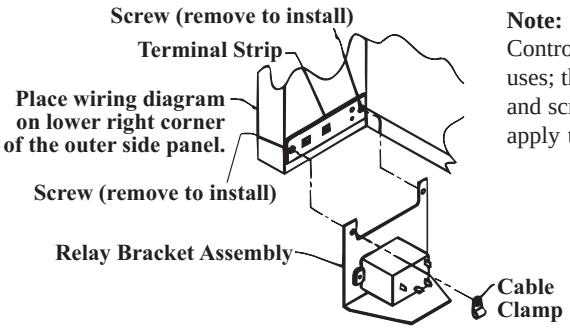

Note: Multiple Heater Control Kits have multiple uses; they include spacers and screws that do not apply to these models.

	Qty	P/N	Component Description
Code 135A - Package P/N 102248 (Same as Option CL31)	1	**102708**	Transformer 35VA- Basler #BE141640-RAK
	2	**103152**	Sheetmetal Screws, #6 x 1-1/2" lg
	2	**111233**	Tinnerman Clips,#C1110-62
	2	**102243**	Relay Assembly
	2	**16228**	Cable Clamp
	2	**131127**	Wiring Diagram Label
Code 135B - Package P/N 102249 (Same as Option CL32)	Qty	**P/N**	Component Description
	1	**102243**	Relay Assembly
	1	**16225**	Cable Clamp 3/16"
	1	**131127**	Wiring Diagram Label

Ignition Controllers and Conversion Kits

Code 136A - Ignition Controller for Intermittent Spark Pilot System without Lockout, P/N 257009 (Serial No. Code 94)

To replace a previously used recycling ignition controllers without lockout (Serial No. Codes 62 and 66), order Replacement Kit, P/N 257472

Code 136B - Ignition Controller with Lockout, P/N 257010 (Serial No. Code 95)

To replace a previously used ignition controllers with lockout (Serial No. Codes 63, 65 and 84), order Replacement Kit, P/N 257473

Ignition Conversion Kits for Models F and B with Match-Lit Pilot			
Model	Gas	Spark Kit with or without lockout	P/N
F/B 25-165	Natural	without Lockout	**100525**
F/B 200-250			**100526**
F 300-400, B 300			**100527**
B 400			**102348**
F/B 25-165	Natural	with Lockout	**100528**
F/B 200-250			**100529**
F 300-400, B 300			**100530**
B 400			**102349**
F/B 25-200	Propane	with Lockout	**100531**
F 250-400, B 250-300			**100532**
B 400			**102350**

Optional Thermostats & Thermostat Bracket

Code 137A - 1-stage, 24 volt, 50-90°F, P/N 255350 (Same as Option CL1)

Code 137B - 2-stage, 24 volt, digital, P/N 220630 (Same as Option CL22)

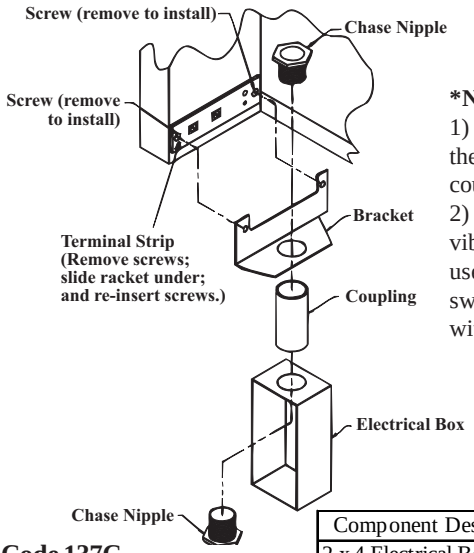

***Notes:**
1) Do not increase the length of the coupling.
2) Due to possible vibration, do not use mercury switch thermostat with this bracket.

Code 137C - Thermostat Bracket, Package P/N 98524 (Same as Option CM3)

Component Description	P/N
2 x 4 Electrical Box	**17782**
1/2" Coupling*	**7447**
1/2" Chase Nipple (2)	**3618**
Bracket	**98353**

Optional Stepdown Transformer Kits - All Fan Models & Blower Models 25-100 with Standard Direct Drive Motors

HEATER MODEL	Same as Option No.	Transformer Pkg P/N	Components (plus items right): P/N	TRANSFORMER
F 25-75	CF2 and CF4	102266	11279	.25 KVA, Type EP, 240-480 volt Primary / 115-240 Volt Secondary, Westinghouse #6E190
FE 25 and F 25 with Option CA1*	CG2 and CG4			
F 100-300	CF2 and CF4	102267	11100	.50 KVA, Type EP, 240-480 Volt Primary / 115-240 Volt Secondary, Westinghouse #6E191
B 25-50				
FE 50-100, 250 and F 50-100, 250 with Option CA1*	CG2 and CG4			
BE 25-50 and B 25-50 with Option CA1*				
FE 125-200, 300 and F 125-200, 300 with Option CA1*	CG2 and CG4	102268	11217	.75 KVA, Type EP, 240-480 Volt Primary / 115-240 Volt Secondary, Westinghouse #6E192
F400	CF2 and CF4	102269	16065	1.0 KVA, Type EP, 240-480 Volt Primary / 115-240 Volt Secondary, Westinghouse #6E193
B 75-100				
FE 400 and F 400 with Option CA1*	CG2 and CG4			
BE 75-100 and B 75-100 with Option CA1*				

Code 138 - Transformer Kit

Components (required to install transformer)		
Qty	P/N	Description
1	102261	Bracket Assy
1	113275	#10 x 1/2" lg Sheetmetal Screw
1	16247	5/16 x 3/4" lg Hex Head Cap Screw
1	1333	5/16 Lock Washer
2	1087	Flat Washer
1	2039	BX Cable 3/8 x 18" long
1	16202	Straight Connector
1	1417	90° Connector
2	16358	Anti-Short Bushings
1	5566	Black Wire, 14 ga x 30" lg, 105°C
1	32525	White Wire, 14 ga x 30" lg, 105°C
1	102264	Green Wire, 14 ga x 30" lg, 105°C
10	16354	Wire Nut 73B

Hangers and Optional Hanger Kits

Code	Description	Models	P/N
140	Hanger Bracket Assy (2 standard on each fan unit, 4 standard on each blower unit)	F/FE25-400 & B/BE25-400	96386
141	Four-Point Suspension Kit (Same as Option CK7)	F/FE25-400	98508
142	Swivel Connection Kit for Two-Point Suspension (Same as Option CK8)	F/FE25-400	98509
143	Four-Point Suspension with Swivel Connections Kit (Same as Option CK9)	F/FE25-400	98510
144	Swivel Connection Kit for Four-Point Suspension (Same as Option CK10)	F/FE25-400 & B/BE25-400	98511
Components for Hanger Kits listed above:			
145	Swivel Connection only (to adapt for hanging from 1" threaded pipe)	All	17627
146	Lock Washers for installing Swivel Connections	All	5197
147	Pressure Switch Bracket only (required on power vented units manufactured prior to 8/92) (Use with Codes 141 or 143 on applicable sizes only.)	FE 25-100 mfgd prior to 8/92	98448
148	8-32 Nut for installation of Pressure Switch Bracket (Code 147A)		31522
149	Four-Point Suspension Kit designed to carry a nearly equal load at each suspension point (Same as Option CK19)	B/BE165-400	165742
Components for Hanger Kit Option CK19:			
149A	Right Side Hanger Bar	B/BE165-400	162829
149B	Left Side Hanger Bar	B/BE165-400	162830
149C	HHD Tap Bolts 3/8-16NCX 11-1/2 #5	B/BE165-400	(4)114350
149D	3/8" Lockwasher	B/BE165-400	(8)5197

Code 140 - Hanger Bracket

Code 141 - Kit to Convert Fan Model to 4-Pt Suspension

(Same as Option CK7)

Code 142 - Swivel Connection Kit for 2-Pt Suspension

(Same as Option CK8)

Code 143 - Kit to Convert to 4-Pt Suspension with Swivel Connections

(Same as Option CK9)

Code 144 - Swivel Connection Kit for 4-Pt Suspension

(Same as Option CK10)

Code 149 - 4-Pt Suspension for Blower Models - designed to equalize the load (Same as Option CK19)

Optional Blower/Filter Cabinet - Blower Models

Code	Description	Size								
		25/50	75	100	125	130	165	200	250/300	400
165	Blower/Filter Cabinet Package for Field Assembly, Adaptable for 1" or 2" filters (Same as Option CW1)	101543	101544	101545	140836	101546	101547	101548	101549	101550
166	Blower/Filter Cabinet Package for Field Assembly, includes 1" Filters (Same as Option CW2)	101628	101629	101630	140884	101631	101632	101633	101634	101635
167	Blower/Filter Cabinet Package for Field Assembly, includes 2" Filters (Same as Option CW3)	101636	101637	101638	140885	101639	101640	101641	101642	101643
Components:										
168	Top and Bottom Panel	99707			140841	100642	100642		--	--
169	Top Right and Bottom Left	--	--	--	--	--	--	--	101582	101584
170	Top Left and Bottom Right	--	--	--	--	--	--	--	101583	101585
171	Stiffening Channel for Top/Btm	--	--	--	--	--	--	--	101551	
172	Stiffening Angle for Top/Btm	--	--	--	--	--	--	--	101601	101602
173	Right Side Hanger	101578				101580				
174	Left Side Hanger	101579				101581				
175	Front Leg	99761	99762	99763	137404	100634	100635	100636	100637	100638
176	Top Filler Panel Assembly	101562	101563	101564	140838	101565	101566	101567	101568	101569
177	Bottom Filler Panel Assembly	101570	101571	101572	140840	101573	101574	101575	101576	101577
178	Rear Leg	99708				100639			100640	100641
179	Door	99712				100646				
180	Plastic Plug for Door Holes	82177								
181	Door Stop	99711				100645				
182	Center Filter Bracket Assembly	--	--	--	--	101624			101625	101626
183	Filter Angle	99710				101591			101592	101593
184	Filter Member	99709				101595			101596	101597
185	Permanent Aluminum Filters									
	16" x 20" x 1"	--	--	--	--	--	--	--	(2)101607	--
	20" x 20" x 1"	101608			--	--	--	--	(2)101608	--
	16" x 25" x 1"	--	--	--	101609				--	(2)101609
	20" x 25" x 1"	--	--	--	101610				--	(2)101610
	16" x 20" x 2"	--	--	--	--	--	--	--	(2)101620	--
	20" x 20" x 2"	101621			--	--	--	--	(2)101621	--
	16" x 25" x 2"	--	--	--	101622				--	(2)101622
	20" x 25" x 2"	--	--	--	101623				--	(2)101623

Blower/Filter Cabinet (with side panel removed)

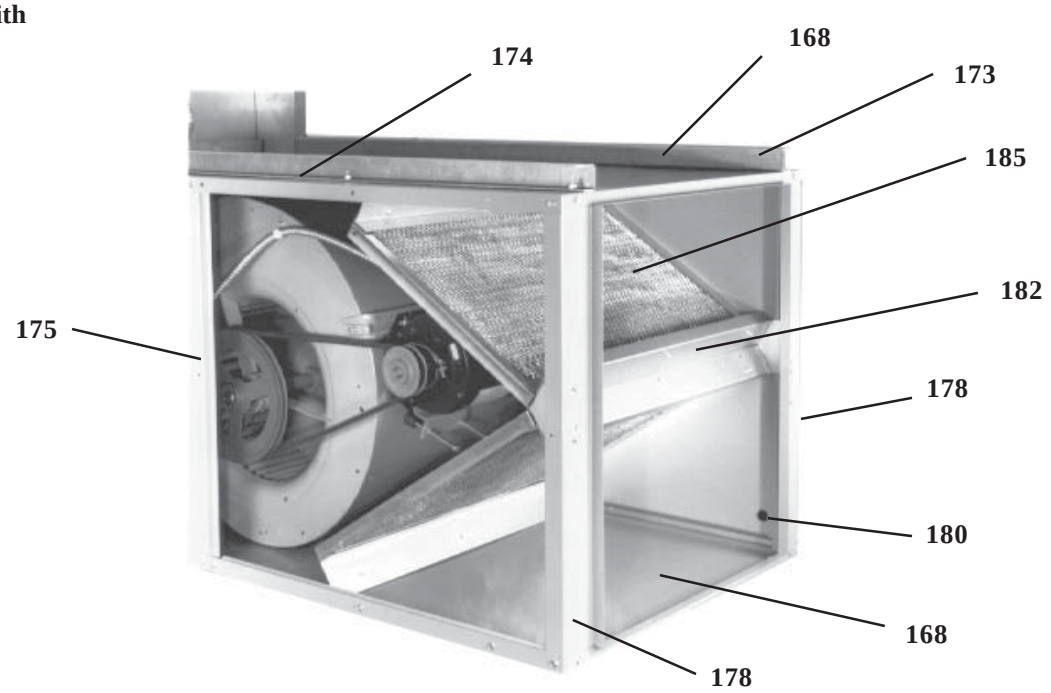

Optional Downturn Air Outlet Nozzles

Code	Description	Size								
		25/50	75	100	125	130	165	200	250/30	400
195	Downturn Nozzle Kit, 25-65° Variable Air Deflection Range, including hanger brackets to convert fan units to 4-point suspension (Same as Option CD2)	98525	98526	98527	135512	98528	98529	98530	98531	98532
196	Downturn Nozzle Kit, 50-90° Variable Air Deflection Range, including hanger brackets to convert fan units to 4-point suspension (Same as Option CD3)	98533	98534	98535	135513	98536	98537	98538	98539	98540
197	Downturn Nozzle Kit, 25-65° Variable Air Deflection Range with Vertical Louvers, including hanger brackets to convert fan units to 4-point suspension (Same as Option CD4)	98541	98542	98543	135510	98544	98545	98546	98547	98548
198	Downturn Nozzle Kit, 50-90° Variable Air Deflection Range with Vertical Louvers (Same as Option CD5) **IMPORTANT: Install on blower units only.**	124918	124919	124920	137302	124921	124922	124923	124924	124926
Downturn Nozzle Component Parts (for vertical louver components, see page 5)										
199	Downturn Nozzle Side Panel only	97874				97875				
200	Downturn Nozzle Top Panel only	97876	97877	97878	135509	97879	97880	97881	97882	97904

NOTE: On fan models, do not use vertical louvers in combination with Code 196 (Option CD3). Do not install Code 198 (Option CD5) on fan models.

Outlet Nozzle Options CD2 and CD4

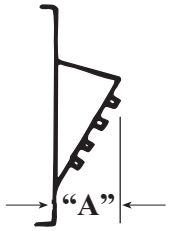

Sizes	"A"	Range of Air Deflection
25-125	9"	25°-65°
130-400	13"	25°-65°

Outlet Nozzle Options CD3 and CD5

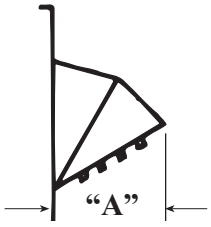

Sizes	"A"	Range of Air Deflection
25-125	16-1/2"	50°-90°
130-400	23-1/2"	50°-90°

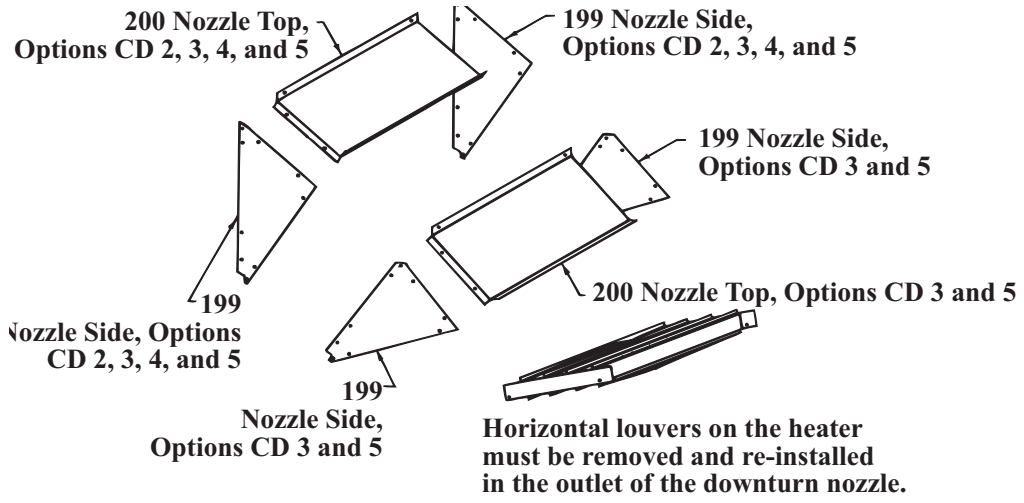

Optional Polytube Adapters - Blower Models, Sizes 75-400

Code	Description	Size							
		75	100	125	130	165	200	250/300	400
210	Polytube Adapter for Suspended Units with Polytube Discharge Above or Below Heater Discharge (Same as Option CD6)	101243	101244	137299	122086	101245	101246	101247	101248
	Polytube Adapter for Suspended Units with Polytube Discharge directly in line with Heater Discharge (Same as Option CD11)	104227	104228	137301	122087	104229	104230	104231	104232
211	Polytube Adapter for Floor-Mounted Units (Same as Option CD8) - **Requires** the addition of guards, Code 50.	101680	101681	137300	122160	101682	101683	101684	101685
Components Common to Suspended and Floor-Mounted Polytube Adapters:									
212	Discharge Panel Assembly - CD6, 8, 11	101249			101250				
213	Discharge Collar Clamp - CD6, 8, 11	101499			146463				
214	Adapter Left Side - CD6, 8	101253		132066	101254			101255	101254
215	Adapter Right Side - CD6, 8	101259		132066	101260			101255	101260
214/ 215	Adapter Side - CD11 (2 required)	104233		132195	104234			104235	104234
216	Adapter Top - CD6, 8	101266	101267	132062	121548	101268	101269	101270	101271
	Adapter Top - CD11	104236	104237	132063	121546	104238	104239	104240	104241
217	Adapter Bottom - CD6, 8	101272	101273	132062	121547	101274	101275	101276	101277
	Adapter Bottom - CD11	104242	104243	132064	121545	104244	104245	104246	104247
218	Polytube Holes Location Label - CD6, 8, 11 (not illustrated)	101263							
Components for Floor-Mounted Adapter only:									
219	Blower Support Assembly	101686							
220	Blower Legs	101689							
221	Support Angles	101691							
222	Cross Brace	101690							
223	Polytube Adapter Legs	101692							

Code 211 - Polytube Adapter with Floor Mounts

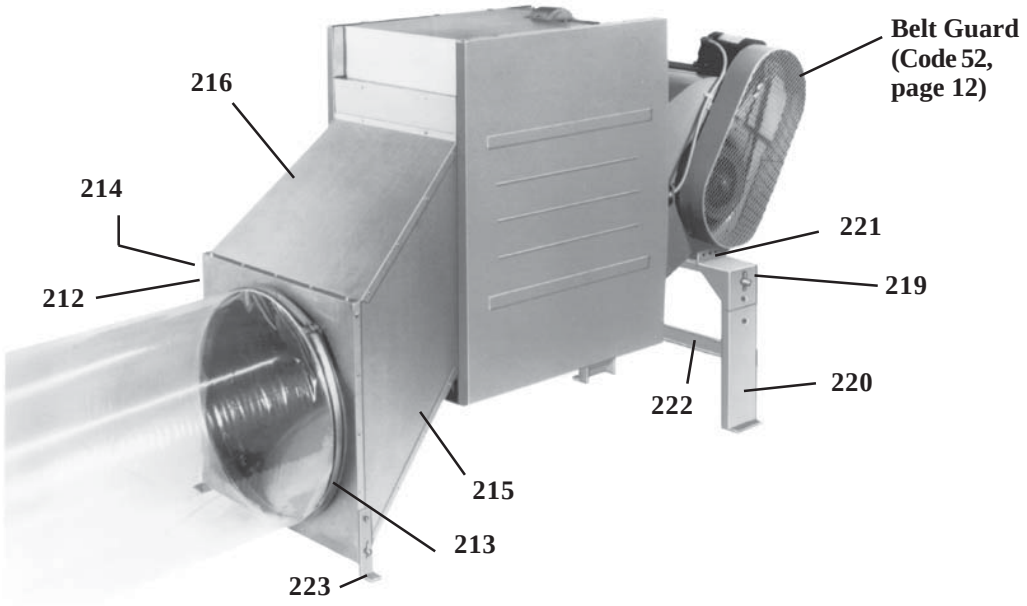

www.RezSpec.com
800-695-1901

©2010 Thomas & Betts Corporation, All rights reserved.
Trademark Note: Reznor® is registered in at least the United States.
2/10 Form P-F/B (Version B)

Thomas&Betts