PARTS CATALOG

EGi-4000

DIGITAL INVERTER GENERATOR

MANUFACTURING NUMBER
099930635

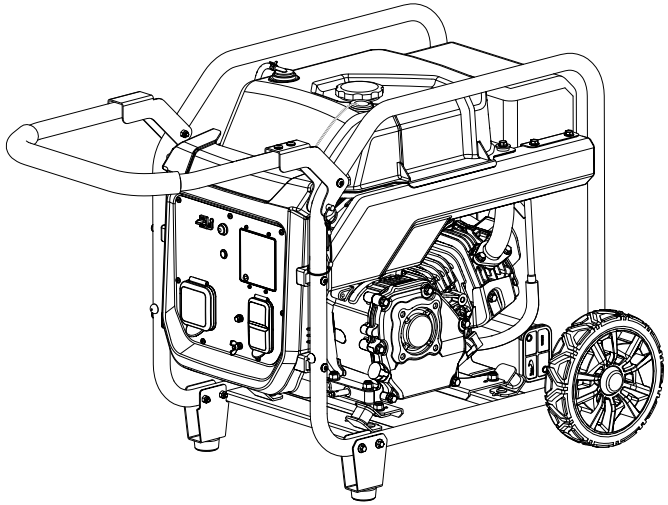

ECHO, INCORPORATED
400 Oakwood Road, Lake Zurich, Illinois 60047
WWW.ECHO-USA.COM

99922205412 (TTI#995000881)
5-14-20 (Rev:03)

©2019 ECHO, Incorporated. All Rights Reserved

FIGURE A

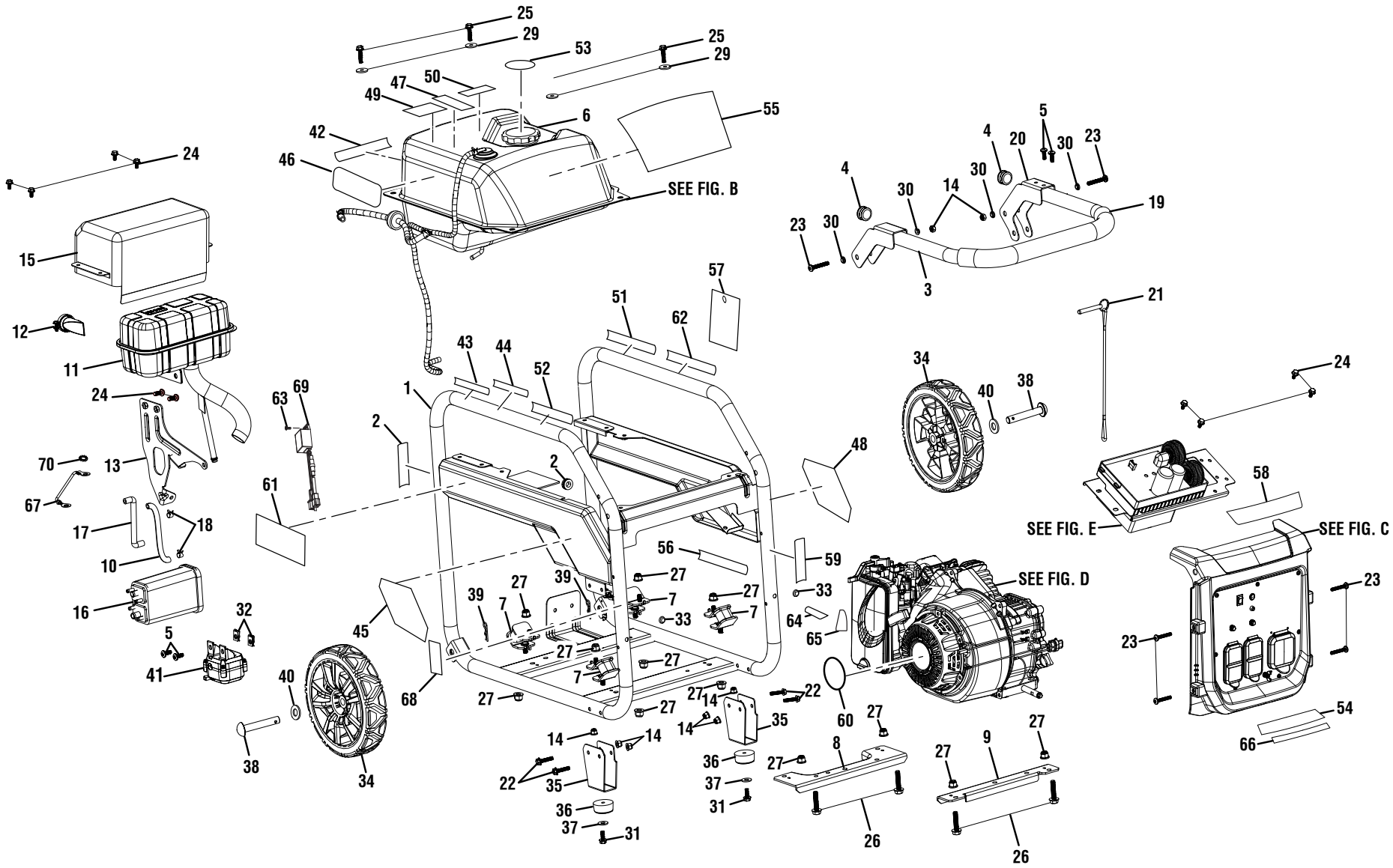
25
29
53
25
29
47
50
49
6
55
42
46
24
SEE FIG. B
15
12
11
24
63
69
1
2
43
44
52
51
62
57
70
13
67
17
18
10
61
2
48
16
32
5
41
45
39
27
7
39
27
7
27
7
33
27
7
33
56
59
64
65
SEE FIG. D
40
68
27
27
27
14
22
60
27
14
14
35
14
14
22
35
36
37
31
36
37
31
8
27
26
27
9
27
26
4
30
14
30
23
30
3
19
5
4
20
30
23
21
34
40
38
24
SEE FIG. E
58
SEE FIG. C
23
23
54
66
38
34

The model number will be found on a label attached to the motor housing. Always mention the model number in all correspondence regarding your **DIGITAL INVERTER GENERATOR** or when ordering parts.

PARTS LIST – FIGURE A

KEY NO.	PART NUMBER	DESCRIPTION	QTY
1	YH479000740	Frame Assembly	1
2	YH653000310	Hot Surface Label	1
3	YH466000170	Handle	1
4	YH466000180	Handle End Caps	2
5	YH439000010	Bolt (M6 x 10 mm, T30 Torx Pan Hd.)	4
6	YH455000050	Fuel Tank Assembly	1
7	YH468000790	Isolator (45 Deg)	4
8	YH479000900	Bottom Plate (Left)	1
9	YH479000910	Bottom Plate (Right)	1
10	YH467000310	Valve Hose	1
11	YH460000120	Muffler	1
12	YH460000091	Spark Arrestor	1
13	YH479000920	Muffler Bracket	1
14	YH450000230	Nut (M6)	8
15	YH479000940	Muffler Heat Shield	1
16	YH481000020	Carbon Canister (Rewin Q-08-007 RW320cc)	1
	YH481000030	Carbon Canister (Depurate Q-13-004)	1
17	YH467000320	Carbon Canister to Airbox Hose	1
18	YH452000150	Fuel Clamp (3/8 in)	2
19	YH466000190	Handle Foam Grip	1
20	YH466000220	Right Bracket	1
21	YH470000360	Pin Release	1
22	YH435000610	Flange Bolt (M6 x 40 mm, Hex Hd.)	4
23	YH415000240	Bolt (M6 x 40 mm, T30 Torx Pan Hd.)	6
24	YH437000000	Flange Bolt (M6 x 12 mm)	10
25	YH437000010	Flange Bolt (M6 x 25 mm)	4
26	YH437000020	Flange Bolt (M6 x 16 mm, T30 Torx Pan Hd.)	4
27	YH450000250	Lock Nut (M8)	12
28	YH653000310	Hot Surface Label	1
29	YH451000110	Washer	4
30	YH451000120	Shoulder Washer	4
31	YH435000740	Flange Bolt (M6 x 16 mm, Hex Hd.)	2
32	YH452000210	U-Clip	2
33	YH466000200	Handle Bumper	2
34	YH478000080	Wheel (8 in.)	2
35	YH468001310	Foot	2
36	YH468001320	Wear Pad	2
37	YH451000390	Washer	2
38	YH478000090	Axle	2
39	YH452000510	Hitch Pin	2
40	YH451000300	Washer	2
41	YH601000140	CO Module Assembly	1
42	YH653000300	Hot Surface Label	1
43	YH653000920	Inquiries Label	1
44	YH653000390	Combustion Label	1
45	YH653000510	Monitoring System Label	1
46	YH653000480	Instruction Label	1
47	YH653000070	CPSC Danger Label	1
48	YH653000280	Danger Icon Label	1
49	YH653000360	E85 Label	1
50	YH653000470	Exhaust Direction Label	1
51	YH653000420	Fire Distance Label	1
52	YH653000410	Fire Danger Label	1
53	YH653000370	Remove Cap Fuel Stabilizer Label (ENG)	1
54	YH653001050	Ground Warning Label (ENG/FR)	1
55	YH653000330	Performance Label	1
56	YH653000340	Lubricant Label	1
57	YH653000400	Notice Hang Tag	1
58	YH653001150	COMMAND Bluetooth Label	1
59	YH653000260	Locking Pin Label	1
60	YH653000270	Engine Recoil Label	1
61	YH653000320	Tank Logo Label	1
62	YH653000380	Fuel Stabilizer Label (Fr/Sp)	1
63	YH435000600	Bolt (M5 x14 mm, Hex Hd.)	1
64	YH653001160	Off Label	1
65	YH653001170	On Label	1
66	YH653000250	FCC label	1
67	YH301000060	Ground Wire	1
68	YH653000460	Do Not Tamper Label (Fr)	1
69	YH314000030	AC to 5V DC Regulator	1

Not Shown:

99922205402	Operator's Manual
99922205423	Quick Start Guide

FIGURE B

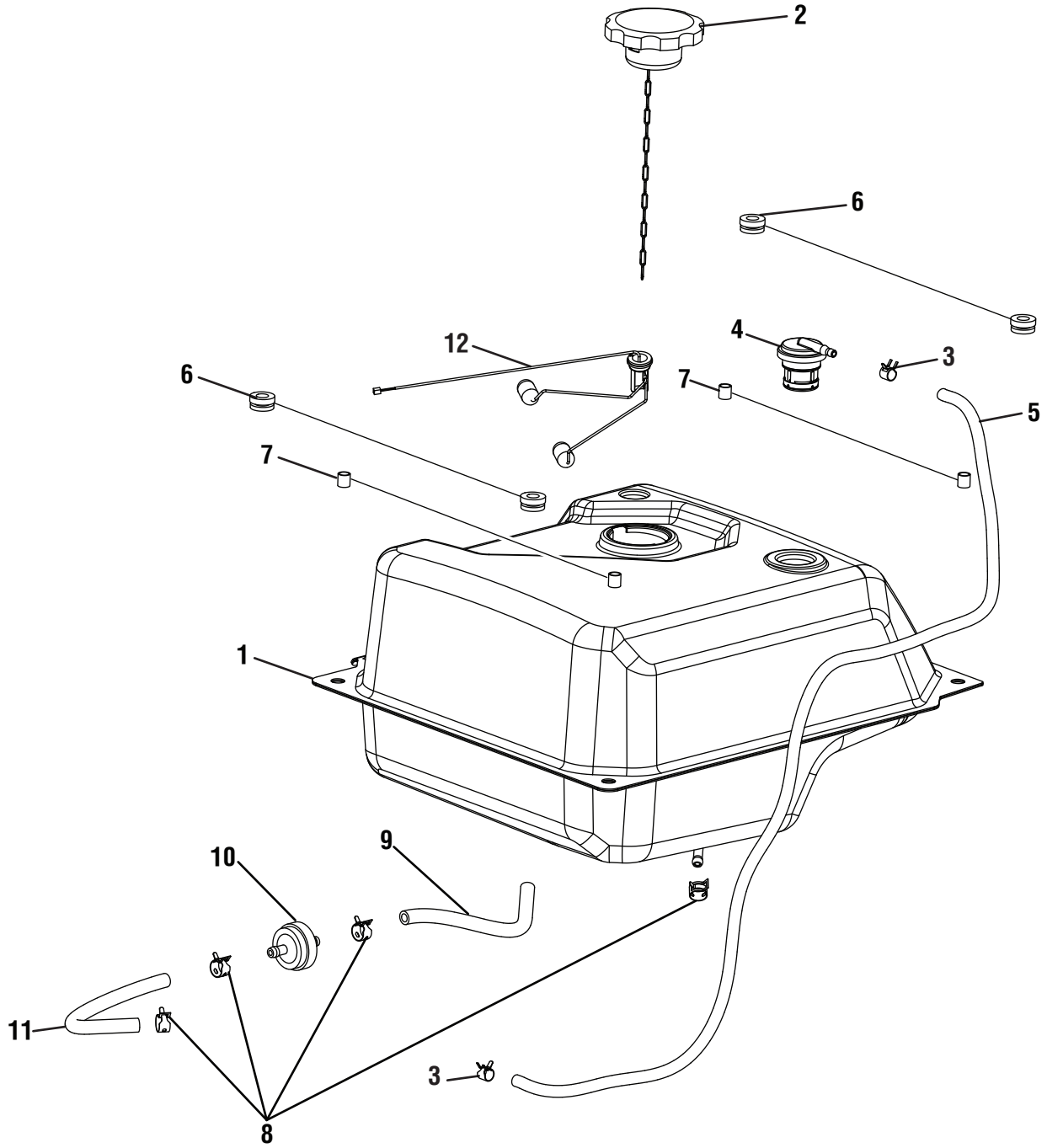

The model number will be found on a label attached to the motor housing. Always mention the model number in all correspondence regarding your **DIGITAL INVERTER GENERATOR** or when ordering parts.

PARTS LIST – FIGURE B

KEY NO.	PART NUMBER	DESCRIPTION	QTY
1	YH455000050	Fuel Tank Assembly	1
2	YH468000740	Fuel Cap w/Chain	1
3	YH452000150	Fuel Clamp (3/8 in.)	2
4	YH459000140	Vapor Vent	1
5	YH467000280	Vapor Hose (4.5 mm x 760 mm)	1
6	YH468000760	Bushing	4
7	YH468000750	Isolator Insert Spacer	4
8	YH452000190	Fuel Clamp (1/2 in.)	4
9	YH467000290	Fuel Hose (6.2 mm to 4.5 mm)	1
10	YH465000100	Inline Fuel Filter	1
11	YH467000300	Fuel Hose	1
12	YH470000380	Fuel Level Sensor	1

FIGURE C

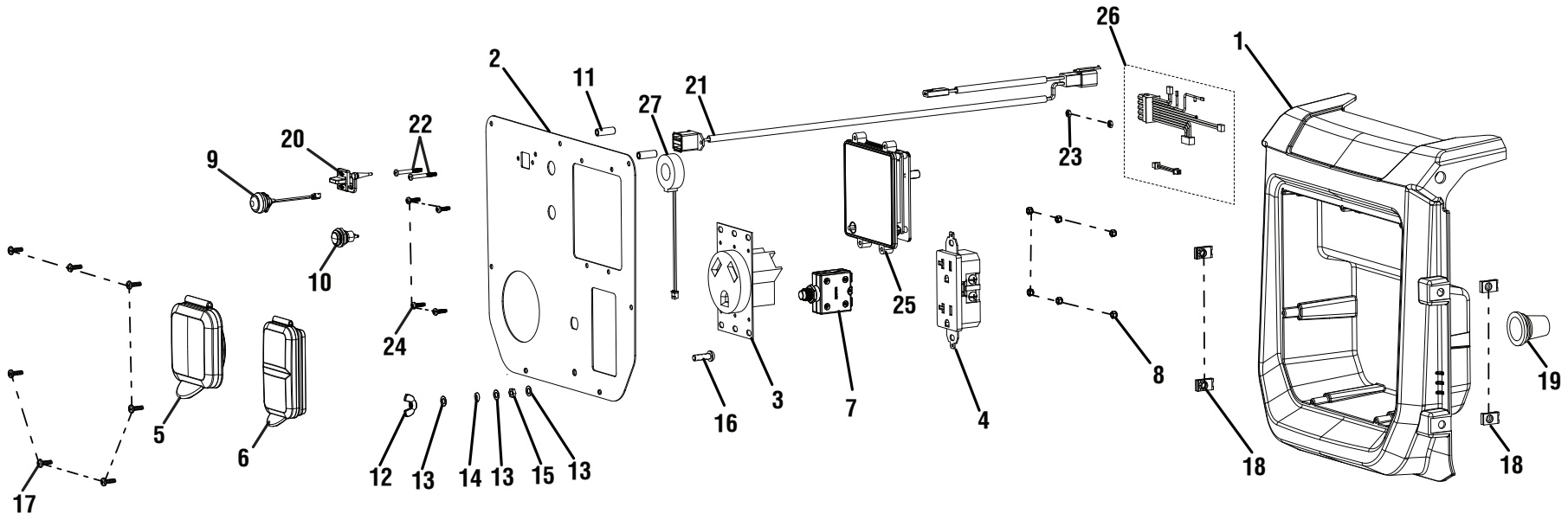
26
1
2
11
21
27
22
20
9
23
10
25
24
8
19
3
7
4
16
5
6
18
18
12
13
14
13
15
13
17

The model number will be found on a label attached to the motor housing. Always mention the model number in all correspondence regarding your **DIGITAL INVERTER GENERATOR** or when ordering parts.

PARTS LIST – FIGURE C

KEY NO.	PART NUMBER	DESCRIPTION	QTY
1	YH479000790	Electrical Panel Housing	1
2	YH479000930	Control Panel	1
3	YH304000130	120 Volt Receptacle	1
4	YH304000110	120 Volt 20 Amp Duplex Receptacle	1
5	YH479000830	Outlet Cover	1
6	YH479000820	120 Volt Rain Cover	1
7	YH318000060	Breaker 20A	1
8	YH450000410	Lock Nut (M4)	6
9	YH321000080	Auto Idle Rocker Switch	1
10	YH321000110	Momentary Push Button-Reset	1
11	YH475000000	Spacer	2
12	YH450000160	Wing Nut (M5)	1
13	YH451000050	Washer (ID 5.3 x OD 10.0 x 0.5 t)	3
14	YH451000090	Split Lock Washer (OD 9 x ID 5 x 1.3t)	1
15	YH450000150	Nut (M5)	1
16	YH435000410	Bolt (M5 x 16 mm, Pan Hd)	1
17	YH417000040	Screw (M4.2 x 12 mm, Pan Hd)	7
18	YH452000210	U-Clip (M6)	4
19	YH468000770	Wiring Rubber Boot	1
20	YH479000620	Dual USB Cover	1
21	YH601000130	USB Wire Harness	1
22	YH415000230	Screw	2
23	YH450000140	Nut (M3)	2
24	YH415000210	Screw (M3.1 x 10 mm, Pan Hd)	4
25	YH310000050	ECHO COMMAND Display	1
26	YH601000060	LCD Wire Harness	1
27	YH304000130	Current Transformer Type-A	1

FIGURE D

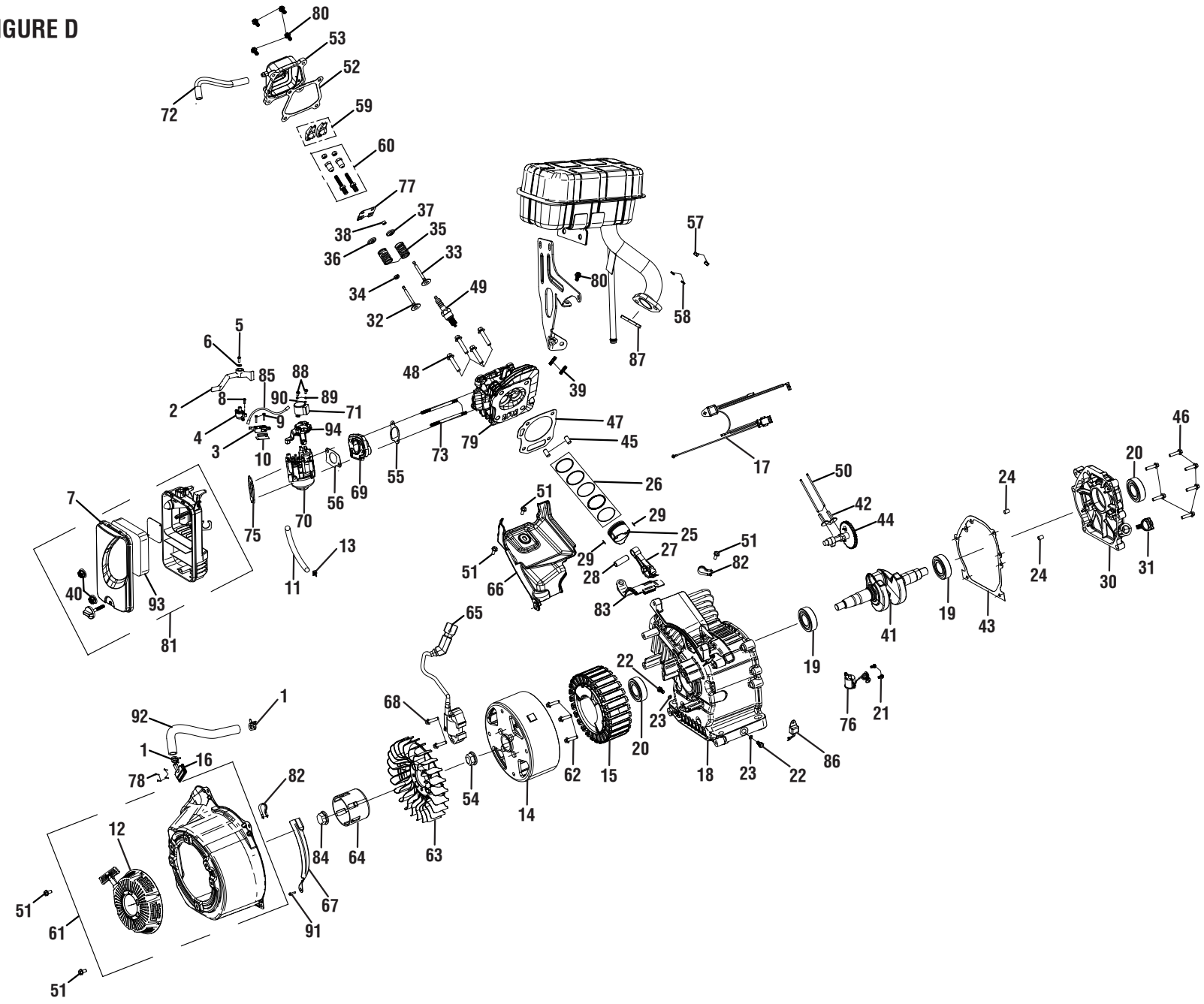
80
53
52
72
59
60
77
37
38
35
36
33
34
49
32
57
80
58
87
5
6
85
88
48
39
2
8
90
89
71
4
9
94
3
10
79
47
45
46
20
73
17
55
26
24
50
7
56
69
42
44
51
75
70
29
25
51
13
29
27
82
24
31
51
28
30
40
11
66
83
93
65
19
41
43
81
22
19
1
68
23
21
92
76
1
16
20
86
78
82
62
15
18
23
22
54
14
12
84
64
63
67
51
61
91
51

The model number will be found on a label attached to the motor housing. Always mention the model number in all correspondence regarding your **DIGITAL INVERTER GENERATOR** or when ordering parts.

PARTS LIST – FIGURE D

KEY NO.	PART NUMBER	DESCRIPTION	QTY
1	YH452000200	Fuel Hose Pinch Clamp	2
2	YH470000390	Control Lever	1
3	YH321000100	Engine Stop Switch	1
4	YH470000410	Fuel Valve	1
5	YH439000000	Bolt (M4 x 10 mm, Pan Hd.)	1
6	YH451000130	Washer	1
7	YH479000780	Air Box	1
8	YH439000020	Bolt (M6 x 10 mm, Pan Hd.)	1
9	YH417000050	Screw (M2.9 x 16 mm, Pan Hd.)	2
10	YH479001010	Engine Stop Bracket	1
11	YH467000270	Fuel Hose (300 mm)	1
12	YH463000110	Engine Recoil Cover	1
13	YH452000150	Fuel Clamp (3/8 in.)	2
14	YH315000030	Rotor	1
15	YH315000040	Stator	1
16	YH470000420	Pair Valve	1
17	YH601000070	Engine Shutdown Wire Harness	1
18	YH458001340	Crankcase	1
19	YH453000100	Ball Bearing	2
20	YH468001330	Oil Seal	2
21	YH435000620	Bolt (M6 x 16 mm)	2
22	YH468001340	Drain Plug Bolt	2
23	YH451000400	Drain Plug Washer	2
24	YH452000520	Casecover Dowel Pin	2
25	YH458001090	Piston	1
26	YH458001100	Piston Scraper Ring Set	1
27	YH458001110	Connecting Rod Assembly	1
28	YH458001120	Piston Ring	1
29	YH458001130	Piston Clip	2
30	YH458001140	Crankcase Cover Assembly	1
31	YH470000830	Dipstick	1
32	YH458001150	Intake Valve	1
33	YH458001160	Exhaust Valve	1
34	YH458001170	Intake Valve Returner	1
35	YH458001180	Spring Valve	2
36	YH458001190	Spring Valve Intake Seat	1
37	YH458001200	Spring Valve Exhaust Seat	1
38	YH458001210	Rotator	1
39	YH452000530	Stud Bolt	2
40	YH450000420	Nut (M6)	2
41	YH458001220	Crankshaft Assembly	1
42	YH458001230	Valve Lifter	2
43	YH468001460	Casecover Packing	1
44	YH458001240	Camshaft Assembly	1
45	YH452000540	Dowel Pin	2
46	YH435000630	Bolt (M8 x 30 mm)	6
47	YH468001350	Cylinder Head Gasket	1
48	YH435000640	Bolt (M8 x 60 mm)	4
49	YH461000260	Spark Plug	1
50	YH458001250	Push Rod	2
51	YH435000650	Bolt	5
52	YH468001470	Headcover Packing	1
53	YH458001260	Cylinder Head Cover	1
54	YH450000430	Nut	2
55	YH468001480	Intake Packing	1
56	YH468001490	Carburetor Packing	1
57	YH450000440	Nut	2
58	YH451000410	Spring Washer	2
59	YH458001270	Rocker Assembly	2
60	YH458001280	Adjuster Rocker Arm	2
61	YH463000200	Recoil Starter Assembly	1
62	YH435000660	Bolt (M6 x 45 mm)	3
63	YH463000210	Recoil StarterFan	1
64	YH463000220	Starter Pulley	1
65	YH461000270	Ignition Coil	1
66	YH479001780	Shroud	1
67	YH479001790	Shroud	1
68	YH435000670	Bolt (M6 x 30 mm)	2
69	YH468001360	Carburetor Insulator	1
70	YH459000460	Carburetor Assembly	1
71	YH459000470	Stepper Motor	1
72	YH467000480	Breather Tube	1
73	YH452000550	Stud	2
74	YH452000560	Fuel Line Clip	1
75	YH468001370	Carburetor Spacer	1
76	YH327000120	Oil Level Switch Assembly	1
77	YH458001290	Push Rod Guide Plate	1
78	YH415000790	Screw	4
79	YH458001300	Cylinder Head	1
80	YH435000680	Bolt (M6 x 16 mm)	5
81	YH479001800	Air Cleaner Assembly	1
82	YH452000570	Fuel Line Clip	2
83	YH479001810	Shroud	1
84	YH435000690	Bolt	1
85	YH301000120	Flameout Wire	1
86	YH314000040	Amplifier	1
87	YH451000420	Washer	1
88	YH435000700	Bolt (M3 x 8 mm)	2
89	YH452000430	Spring Washer	2
90	YH452000440	Flat Washer	2
91	YH435000710	Bolt (M6 x 20 mm)	1
92	YH467000310	Pair Valve Hose	1
93	YH465000220	Air Filter	1
94	YH470000400	Choke Lever	1

Not Shown:
YH459000590 High Altitude Kit

FIGURE E

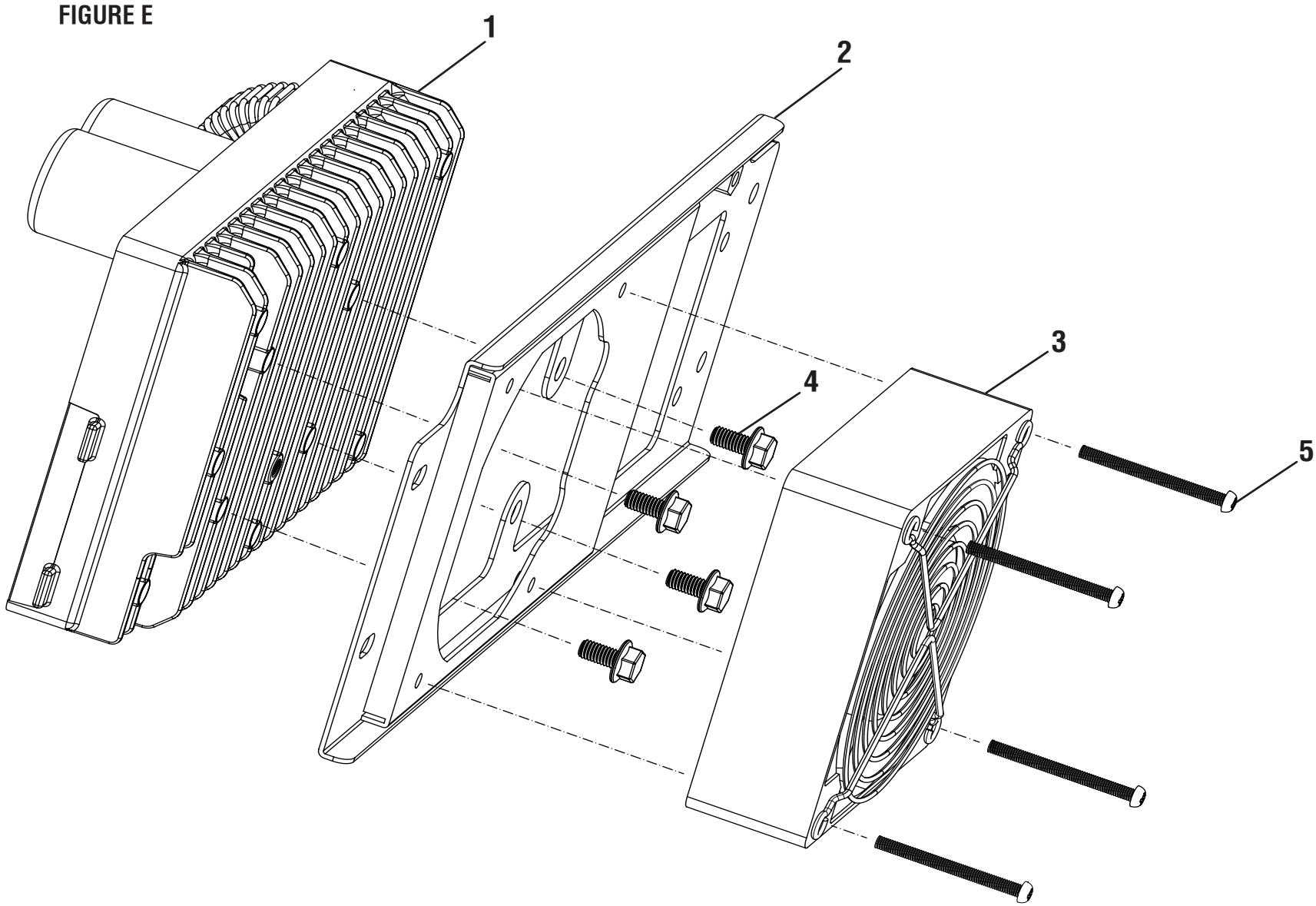

The model number will be found on a label attached to the motor housing. Always mention the model number in all correspondence regarding your **DIGITAL INVERTER GENERATOR** or when ordering parts.

PARTS LIST – FIGURE E

KEY NO.	PART NUMBER	DESCRIPTION	QTY
1	YH311000030	Inverter Module	1
2	YH466000360	Inverter Module Bracket Assembly	1
3	YH472000030	AC Cooling Fan	1
4	YH437000000	Bolt (M6 x 12 mm, Hex Hd.)	4
5	YH417000010	Screw (M4 x 46 mm, Pan Hd.)	4

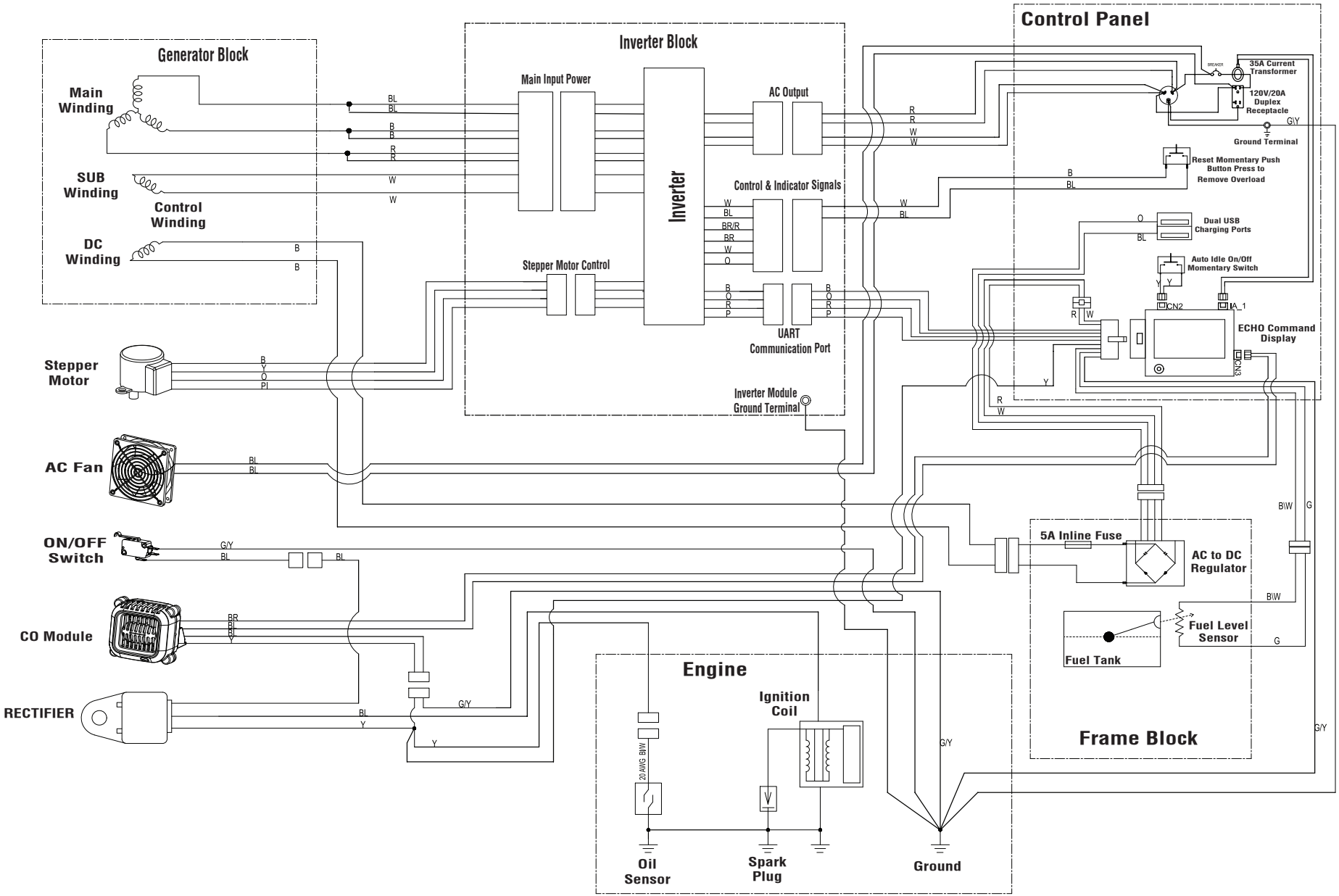

WIRING DIAGRAM