FORM MS10502 REV A 07/07/2014
REPLACES FORM MS10502 11/19/2013
FILE IN SECT. 2 OF SERVICE MANUAL

Illustrated Parts List

Model Series

44R800

TYPE NUMBER(S)
0001, 0002, 0003, 0004, 0005, 0006, 0007, 0008,

0009, 0010, 0011, 0012, 0013, 0014, 0015, 0016, 0017

Not for Reproduction

PRINTED IN U.S.A.

COPYRIGHT by BRIGGS & STRATTON CORPORATION
All rights reserved. No part of this material may be reproduced or transmitted, in any form or by any means, electronic or mechanical, including photocopying, recording or by any information storage and retrieval system, without permission in writing from Briggs & Stratton Corporation.

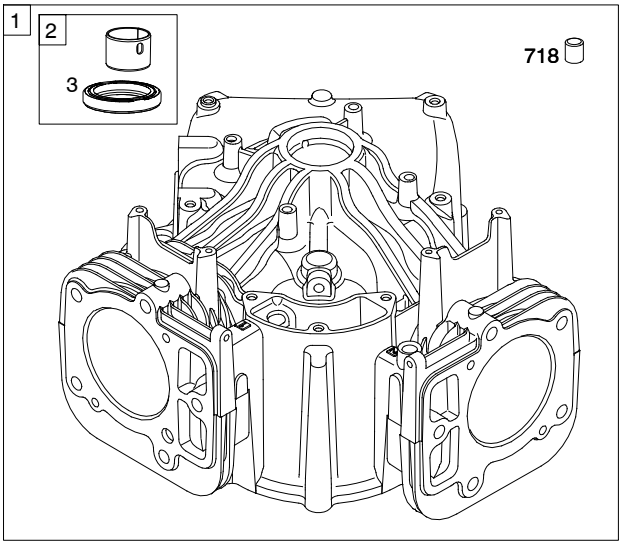

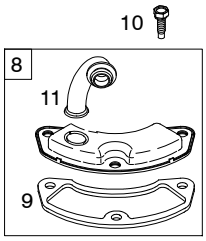

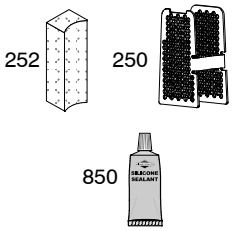

1319 WARNING LABEL

REQUIRED *when replacing parts with warning labels affixed.*

1319A WARNING LABEL

REQUIRED *when replacing parts with warning labels affixed.*

1058 OPERATOR'S MANUAL

1330 REPAIR MANUAL

1036 EMISSIONS LABEL

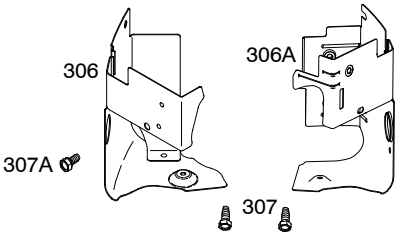

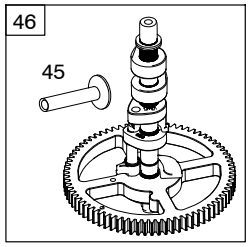

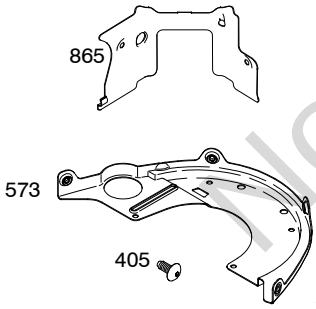

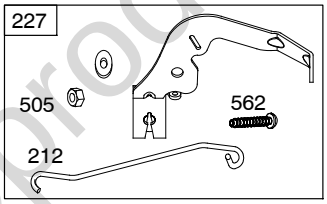

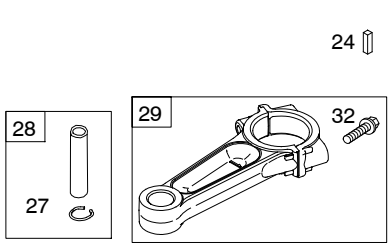

Not for Reproduction

Illustrations cover a range of engines. Parts shown without corresponding text may not be used on your specific engine.

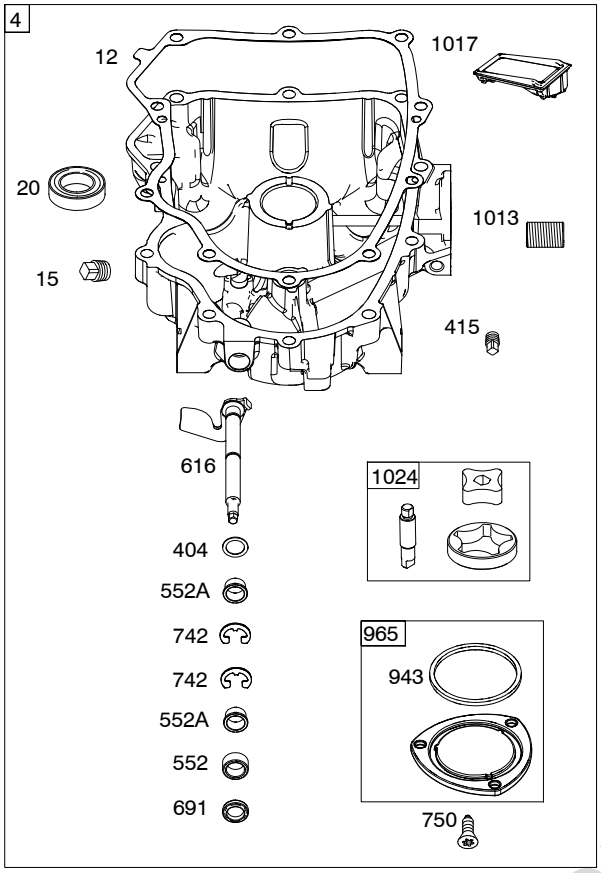

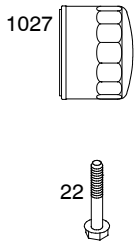

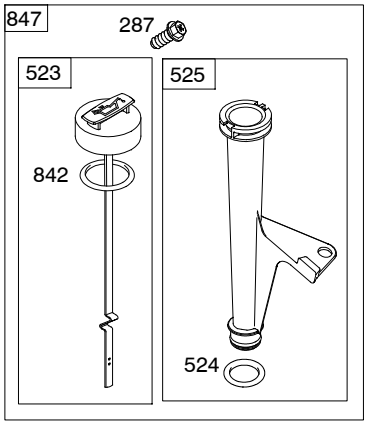

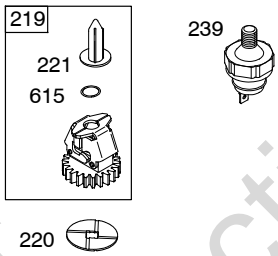

Not for Reproduction

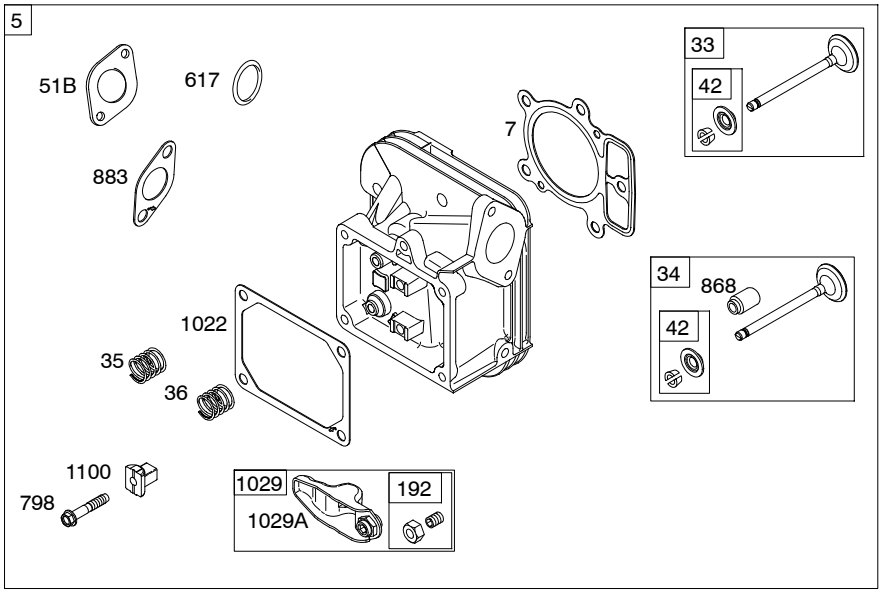

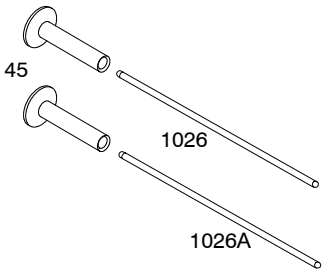

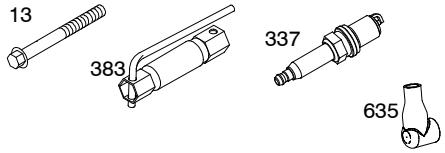

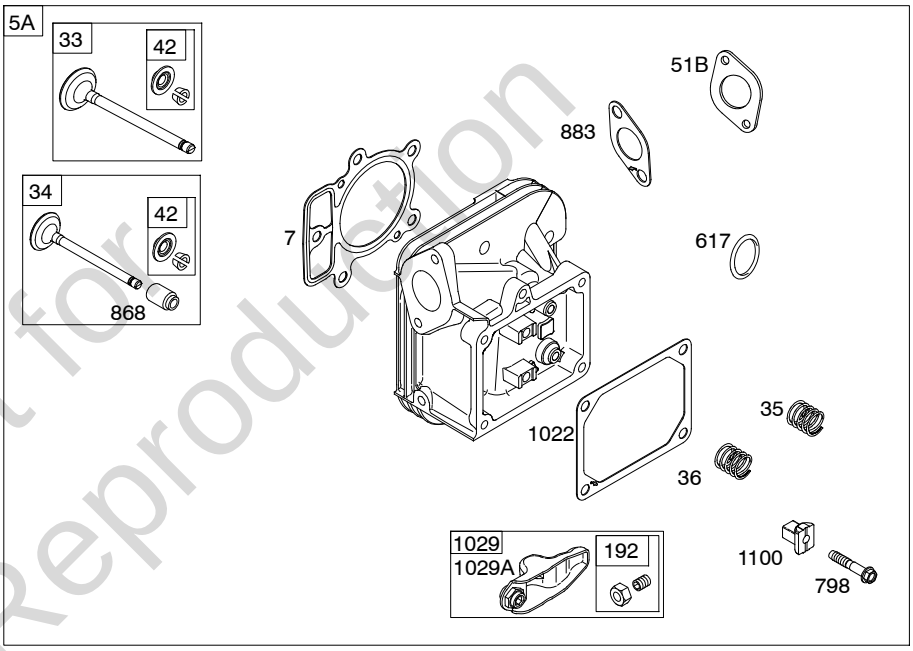

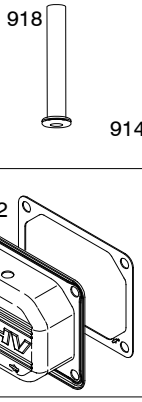

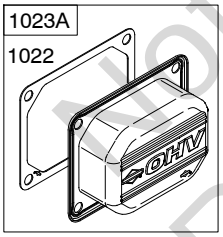

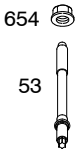

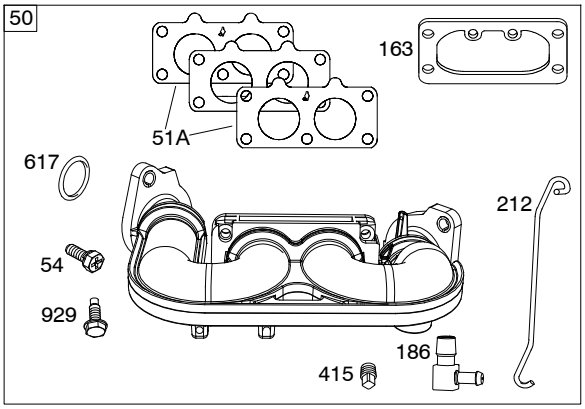

Not for Reproduction

Illustrations cover a range of engines. Parts shown without corresponding text may not be used on your specific engine.

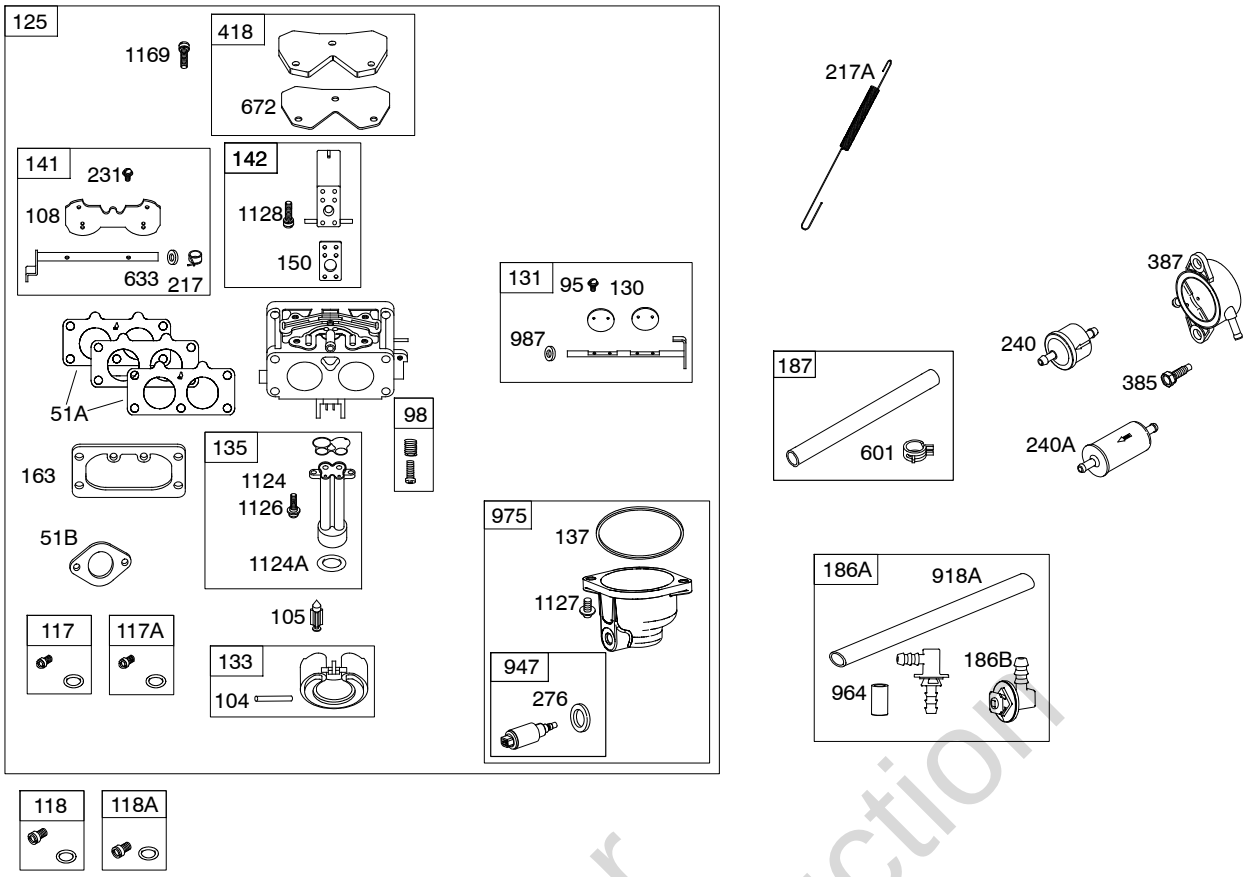

Not for Reproduction

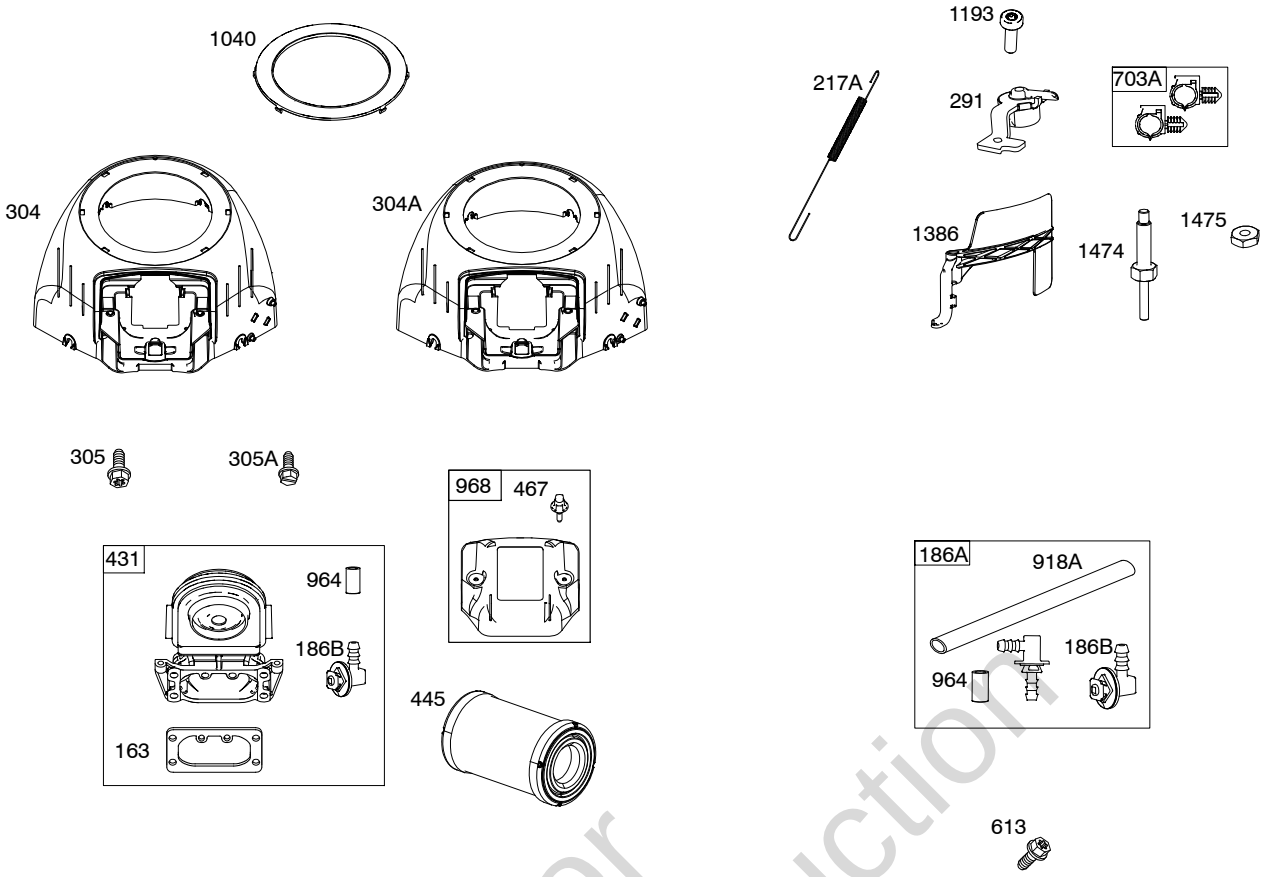

Not for Reproduction

Illustrations cover a range of engines. Parts shown without corresponding text may not be used on your specific engine.

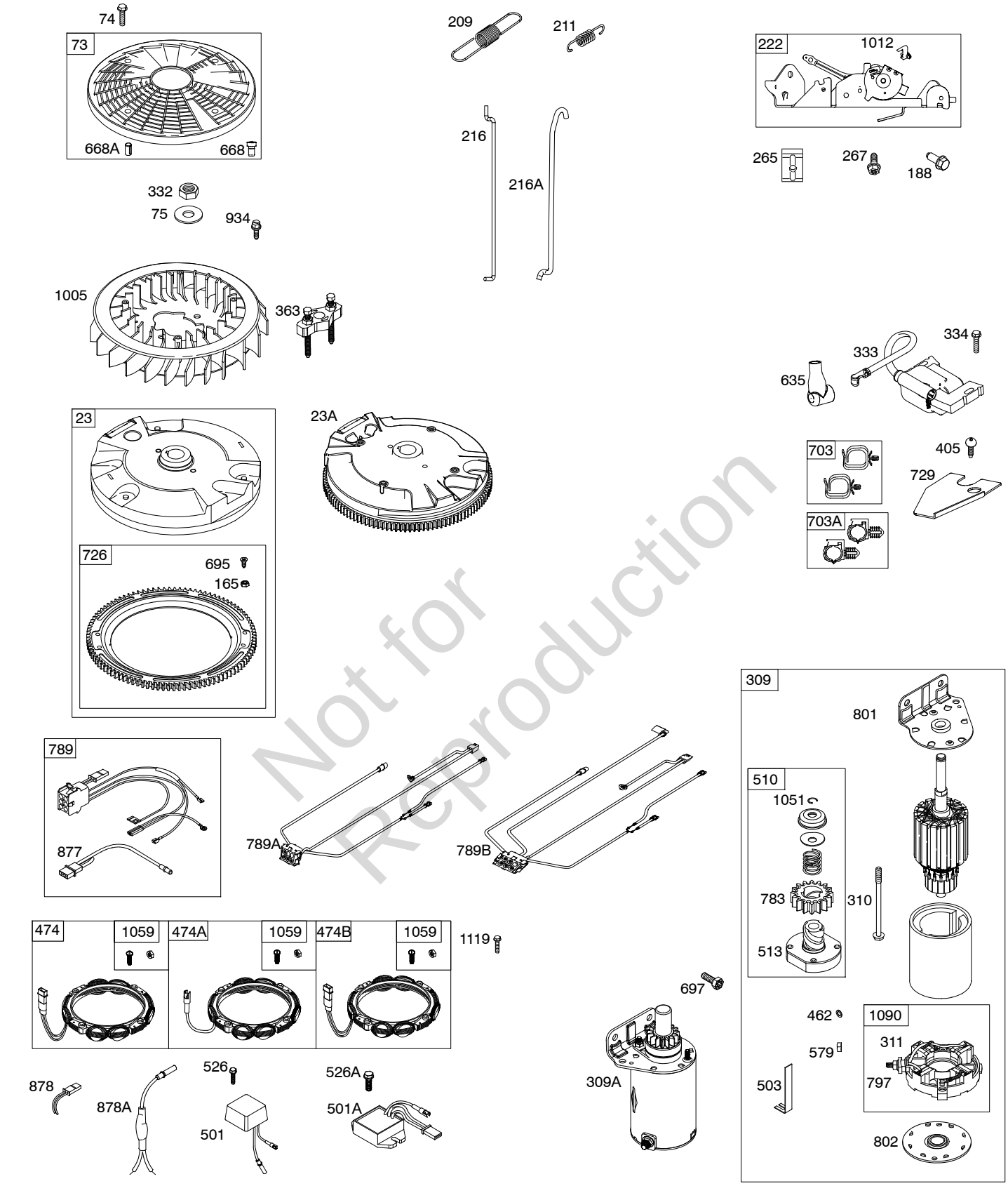

Not for Reproduction

Illustrations cover a range of engines. Parts shown without corresponding text may not be used on your specific engine.

121 CARBURETOR OVERHAUL KIT

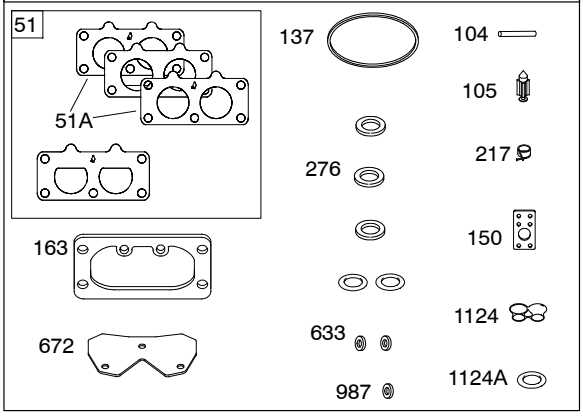

358 ENGINE GASKET SET

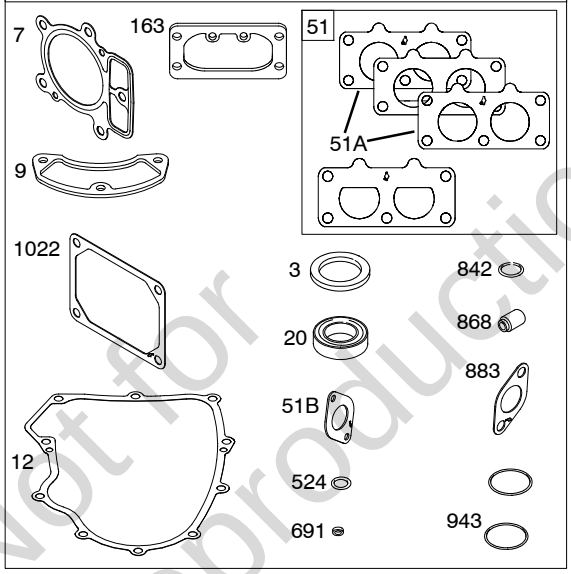

Not for Reproduction

1095 VALVE GASKET SET

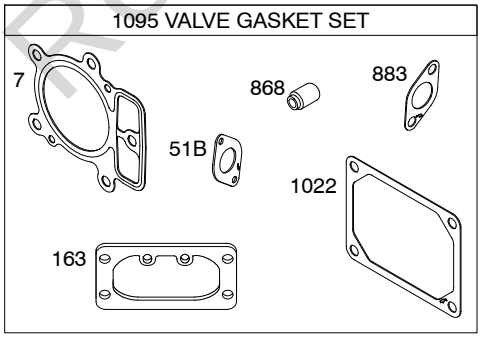

Illustrations cover a range of engines. Parts shown without corresponding text may not be used on your specific engine.

REF. NO.	PART NO.	DESCRIPTION
1	591695	Cylinder Assembly
2	797673	Kit-Bushing/Seal (Magneto Side)
3	391086s	Seal-Oil (Magneto Side)
4	796307	Sump-Engine
5	799088	Head-Cylinder (Cylinder #1)
5A	799089	Head-Cylinder (Cylinder #2)
7	693997	Gasket-Cylinder Head
8	792185	Breather Assembly
9	690937	Gasket-Breather
10	691108	Screw (Breather Assembly)
11	792184	Tube-Breather
12	591911	Gasket-Crankcase
13	592244	Screw (Cylinder Head)
15	690946	Plug-Oil Drain
16	699701	Crankshaft
		------ Note ------
		796237 Crankshaft Used on Type No(s). 0004, 0005, 0011.
		796256 Crankshaft Used on Type No(s). 0002, 0008, 0009, 0015.
20	795387	Seal-Oil (PTO Side)
22	694966	Screw (Crankcase Cover/Sump)
23	691053	Flywheel
		------ Note ------
		691054 Flywheel Used on Type No(s). 0013.
23A	799090	Flywheel Used on Type No(s). 0004, 0016.
24	222698s	Key-Flywheel (Aluminum)
25	792023	Piston Assembly (Standard)
		792072 Piston Assembly (.020" Oversize)
26	792026	Ring Set (Standard)
		------ Note ------
		792073 Ring Set (.020" Oversize)
27	690975	Lock-Piston Pin
28	696581	Pin-Piston
29	796209	Rod-Connecting
32	690976	Screw (Connecting Rod)
33	793557	Valve-Exhaust
34	793556	Valve-Intake
35	694865	Spring-Valve (Intake)
36	694865	Spring-Valve (Exhaust)
42	499586	Keeper-Valve
45	690977	Tappet-Valve
46	797242	Camshaft
50	591784	Manifold-Intake
51	795123	Gasket-Intake
51A	690950	Gasket-Intake
51B	690949	Gasket-Intake
53	690951	Stud (Carburetor)
54	699816	Screw (Intake Manifold)
73	494439	Screen-Rotating
74	698425	Screw (Rotating Screen)
75	691056	Washer (Flywheel)
95	690718	Screw (Throttle Valve)
98	699721	Kit-Idle Speed
104	694918	Pin-Float Hinge
105	797410	Valve-Float Needle
108	699723	Valve-Choke
117	842585	Jet-Main (Standard) (Left) (Nikki)
117A	842629	Jet-Main (Standard) (Right) (Nikki)
118	792296	Jet-Main (High Altitude) (Left) (Nikki)
118A	842585	Jet-Main (High Altitude) (Right) (Nikki)
121	797890	Kit-Carburetor Overhaul
125	593393	Carburetor
		------ Note ------
		593392 Carburetor Used on Type No(s). 0001, 0002, 0003, 0008, 0010, 0014, 0015.
130	690993	Valve-Throttle
131	799113	Kit-Throttle Shaft
133	699724	Float-Carburetor
135	699729	Tube-Fuel Transfer
137	690994	Gasket-Float Bowl
141	796228	Kit-Choke Shaft
142	699726	Nozzle-Carburetor
150	841649	Gasket-Nozzle
163	691001	Gasket-Air Cleaner
165	693148	Nut (Ring Gear)
186	795985	Connector-Hose (Intake Manifold)
186A	796532	Connector-Hose (Oil Drain Hose)
186B	799158	Connector-Hose (EVAP)
186C	845141	Connector-Hose (EVAP)
187	791766	Line-Fuel (Cut to Required Length)
188	691108	Screw (Control Bracket)
192	690083	Adjuster-Rocker Arm
209	798921	Spring-Governor (Orange)
		------ Note ------
		799171 Spring-Governor (Light Blue) Used on Type No(s). 0016.
211	691019	Spring-Governed Idle (No Color)
212	695238	Link-Throttle
216	796229	Link-Choke (Choke-A-Matic Link)
216A	592575	Link-Choke Used on Type No(s). 0001, 0003, 0008.
217	799771	Spring-Choke Return
217A	592585	Spring-Choke Return (Blue)
219	793338	Gear-Governor
220	799772	Washer (Governor Gear)
221	841026	Cup-Governor
222	592555	Bracket-Control (Choke-A-Matic)
227	798856	Lever-Governor Control
231	690718	Screw (Choke Valve)
239	792028	Switch-Oil Pressure
240	691035	Filter-Fuel (Includes A Paper Element With A 40 Micron Rating)

Notice Reproduction

Illustrations cover a range of engines. Parts shown without corresponding text may not be used on your specific engine.
Assemblies include all parts shown in frames.

44R800

REF. NO.	PART NO.	DESCRIPTION
240A	**695666**	Filter-Fuel (Includes A Paper Element With A 30 Micron Rating)
250	**690957**	Retainer-Breather
252	**794389**	Collector-Oil
265	**691024**	Clamp-Casing
267	**792629**	Screw (Casing Clamp)
276	**695410**	Washer-Sealing
287	**695820**	Screw (Dipstick Tube)
291	**592581**	Thermostat
304	**591656**	Housing-Blower
304A	**591657**	Housing-Blower Used on Type No(s). 0008.
305	**691005**	Screw (Blower Housing)
305A	**790690**	Screw (Blower Housing to Intake Elbow)
306	**796852**	Shield-Cylinder (Cylinder #1)
306A	**591666**	Shield-Cylinder (Cylinder #2)
307	**691003**	Screw (Cylinder Shield)
307A	**691108**	Screw (Cylinder Shield)
309	**497595**	Motor-Starter
309A	**590476**	Motor-Starter Used on Type No(s). 0004, 0016.
310	**690323**	Screw (Starter Motor)
311	**497608**	Brush Set
318	**691127**	Screw (Bracket To Engine)
318A	**792629**	Screw (ECU To Bracket)
332	**691059**	Nut (Flywheel)
333	**592846**	Armature-Magneto
334	**691061**	Screw (Magneto Armature)
337	**491055s**	Plug-Spark
		------ Note ------
		792015 Plug-Spark Used on Type No(s). 0011, 0012, 0013, 0014, 0015, 0016, 0017.
		793541 Plug-Spark Used on Type No(s). 0002.
358	**694012**	Gasket Set-Engine
363	**19203**	Puller-Flywheel
377	**690979**	Key-Woodruff
383	**19576s**	Wrench-Spark Plug
385	**797409**	Screw-Fuel Pump
387	**808656**	Pump-Fuel
404	**690442**	Washer (Governor Crank)
405	**697820**	Screw (Backplate)
415	**794903**	Plug
418	**795912**	Plate-Carburetor
431	**591661**	Elbow-Intake (EVAP)
445	**591334**	Filter-Air Cleaner Cartridge
		------ Note ------
		796031 Filter-Air Cleaner Cartridge Used on Type No(s). 0002, 0004, 0009, 0010, 0011, 0012, 0013, 0014, 0015, 0016, 0017.
462	**691261**	Washer (Starter Cable)
467	**591660**	Knob-Air Cleaner
474	**592831**	Alternator (Dual Circuit)
474A	**592829**	Alternator (5/9 Amp. Regulated Or Tri-Circuit)
474B	**592830**	Alternator (10 - 16 Amp. Regulated)
493	**797176**	Bracket-Electronic Choke Module
501	**794360**	Regulator (5/9 Amp. Regulated Or Tri-Circuit)
501A	**845907**	Regulator (10 - 16 Amp. Regulated)
503	**691532**	Strap-Starter
505	**691029**	Nut (Governor Control Lever)
510	**696541**	Drive-Starter
513	**692024**	Clutch-Drive
523	**691036**	Dipstick
524	**691032**	Seal-Dipstick Tube
525	**691037**	Tube-Dipstick
526	**691129**	Screw (Regulator)
526A	**691108**	Screw (Regulator)
552	**796638**	Bushing-Governor Crank
552A	**690553**	Bushing-Governor Crank
562	**690311**	Bolt (Governor Control Lever)
563	**799359**	Screw (Debris Guard)
573	**593465**	Plate-Back
579	**691029**	Nut (Starter Cable)
601	**691038**	Clamp-Hose (Black)
613	**690341**	Screw (Muffler)
615	**698290**	Retainer-Governor Shaft
616	**691045**	Crank-Governor
617	**697891**	Seal-O Ring (Intake Manifold)
633	**699813**	Seal-Choke/Throttle Shaft
635	**66538s**	Boot-Spark Plug
654	**690958**	Nut (Carburetor)
668	**691500**	Spacer
668A	**691215**	Spacer
672	**690234**	Gasket-Carburetor Plate
691	**790574**	Seal-Governor Shaft
695	**693149**	Screw (Ring Gear)
697	**591909**	Screw (Drive Cap)
703	**691010**	Clip
703A	**592584**	Clip (EVAP Hose)
718	**690959**	Pin-Locating
726	**499612**	Gear-Ring
729	**797454**	Clip-Wire
741	**690980**	Gear-Timing
742	**690328**	Retainer-E Ring
750	**796208**	Screw (Oil Pump Cover)
783	**695708**	Gear-Pinion
789	**698330**	Harness-Wire Used on Type No(s). 0013.

Not for Reproduction

REF. NO.	PART NO.	DESCRIPTION
789A	591392	Harness-Wire Used on Type No(s). 0001, 0002, 0003, 0006, 0007, 0008, 0009, 0010, 0012, 0014, 0015, 0016, 0017.
789B	591393	Harness-Wire Used on Type No(s). 0004, 0005, 0011.
797	693167	Nut (Brush Retainer)
798	697890	Screw (Rocker Arm)
801	691283	Cap-Drive
802	691286	Cap-End
842	691031	Seal-O Ring (Dipstick Tube)
847	499602	Dipstick/Tube Assembly
850	100106	Sealant-Liquid
865	591667	Cover-Air Guide (Valley)
868	690968	Seal-Valve
877	790544	Wire/Connector-Alternator
878	398661	Harness-Alternator
878A	691955	Harness-Alternator
883	690970	Gasket-Exhaust
914	691127	Screw (Rocker Cover)
918	593998	Hose-Vacuum (Rocker Cover) (Length 3.2 Inches)
918A	799160	Hose-Vacuum (EVAP System) (Length 9.4 Inches)
929	695239	Screw (Choke Control Bracket)
934	592604	Screw (Fan Mounting)
943	796222	Seal-O Ring (Oil Pump Cover)
947	798779	Solenoid-Fuel
949	798767	Guard-Debris Screen
964	799159	Cap-Connector
965	796221	Cover-Oil Pump
968	591658	Cover-Air Cleaner (Black)
		------ Note ------
		591659 Cover-Air Cleaner (Grey)
975	799114	Bowl-Float
987	691000	Seal-Throttle Shaft
1005	791236	Fan-Flywheel
1012	592556	Retainer-Link
1013	690954	Nipple-Oil Filter
1017	796214	Screen-Oil Pump
1022	690971	Gasket-Rocker Cover
1023	793146	Cover-Rocker (Cylinder #1)
1023A	499600	Cover-Rocker (Cylinder #2)
1024	794644	Pump-Oil
1026	690981	Rod-Push (Steel)(Exhaust)
1026A	690982	Rod-Push (Aluminum)(Intake)
1027	492932s	Filter-Oil (Black)
		------ Note ------
		798576 Filter-Oil (Orange)
1029	690972	Arm-Rocker
1029A	807323	Arm-Rocker
1036		Label-Emissions (Available from a Briggs & Stratton Authorized Dealer)
1040	791237	Plate-Trim (Black)
		------ Note ------
		798585 Plate-Trim (Orange)
1051	691265	Ring-Retaining
1058	381258TRI	Operator's Manual
1059	698516	Kit-Screw/Washer
1090	691293	Retainer-Brush
1095	694013	Gasket Set-Valve
1100	791959	Pivot-Rocker Arm
1119	691183	Screw (Alternator)
1124	690988	Seal-O Ring (Fuel Transfer Tube)
1124A	841653	Seal-O Ring (Fuel Transfer Tube)
1126	690991	Screw (Fuel Transfer Tube)
1127	695407	Screw (Float Bowl)
1128	690990	Screw (Carburetor Nozzle)
1169	690990	Screw (Carburetor Cover Plate)
1193	592577	Screw (Thermostat)
1319	794467	Label-Warning
1319A	797669	Label-Warning
1330	273521	Repair Manual
1386	592580	Vane-Air
1474	592579	Stud (Air Vane)
1475	592578	Nut (Air Vane)

Not for Reproduction

Not for
Reproduction

BRIGGS & STRATTON®