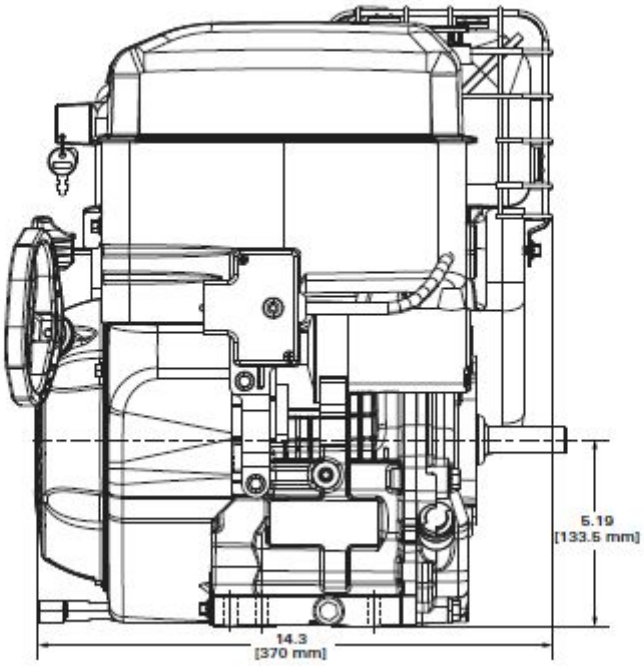
5.19
[133.5 mm]
14.3
[370 mm]

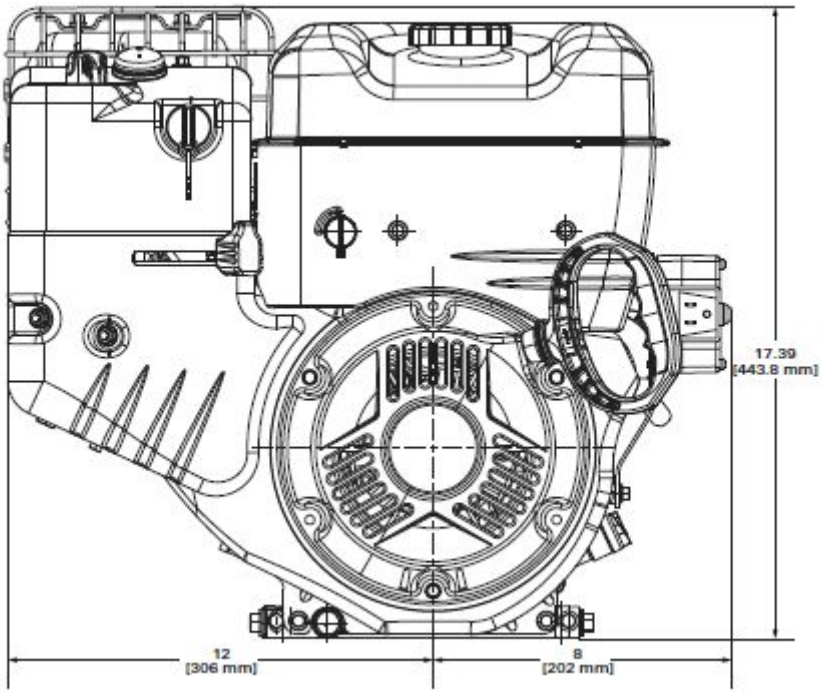
17.39
[443.8 mm]
12
[306 mm]
8
[202 mm]