Sno-Thro

Operator's Manual
Manuel du Utilisateur

Professional Series

Models

926082 – Pro 32
(SN 000101 +)

926083 – Pro 28
(SN 000101 +)

926090 – Pro 28
(SN 000101 +)

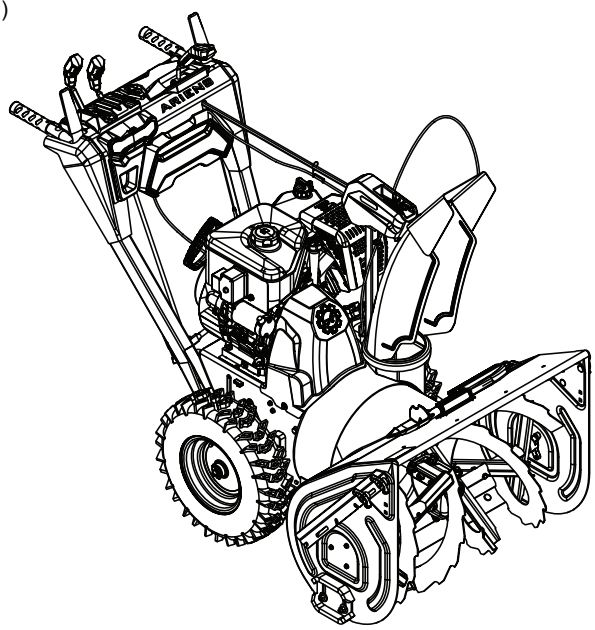

E10 E15 E20 E85

EN ENGLISH

FR FRANÇAIS

09436100A • 9/21
Printed in USA

TABLE OF CONTENTS

WELCOME 1
Register Your Product!. 1
SAFETY. 2
Practices & Laws 2
Emission Control System. 2
Required Operator Training 2
Safety Alert Symbol 2
Signal Words 2
Safety Decals. 3
Safety Rules. 4
CONTROLS & FEATURES. 8
Engine Key. 9
Primer Bulb 9
Fuel Valve 9
Electric Start Button 9
Choke Control Knob. 9
Throttle Control Lever 9
Speed Selector Lever 9
Attachment Clutch Lever (Right Side) 9
Traction Drive Clutch Lever (Left Side). 9
Dual Handle Interlock. 9
Discharge Chute Rotation Lever 10
Discharge Chute Deflector Lever. 10
Heated Hand Grip Switch 10
Scraper Blade 10
Drift Cutter 10
Skid Shoe. 10
Auger 10
Impeller 10
Shear Bolt 10
Auto-Turn™ Steering 10
OPERATION 10
Emergency Stopping 10
Before Operating Unit 10
Start The Engine 11
Operate Unit 11
Stop the Engine 12
Transport Unit 12
Engine Operation Angle. 12
MAINTENANCE 12
Service Position 12
Maintenance Schedule 13
Service Parts 13
Add Fuel Stabilizer. 13
Check Dual Handle Interlock 13
Check Fasteners 13
Check Clutch Operation. 13
Check Tire Pressure 13
Check Engine Oil 13
Change Engine Oil. 14
Check Auger Gearcase Oil 14
Lubricate Unit. 14
ADJUSTMENTS 15
Adjust Scraper Blade 15
Adjust Skid Shoes 15
Replace Shear bolts 16
Adjust Discharge Chute Deflector Lever 16
Adjust Discharge Chute 16
Adjust Speed Selector Lever 17
Adjust Attachment Clutch & Brake. 17
Adjust Traction Drive Clutch 19
TROUBLESHOOTING 21
STORAGE 23
Short Term. 23
Long Term 23
Start-of-Season Fuel Preparation 23
ACCESSORIES. 23
SPECIFICATIONS. 24
WARRANTY 25

WELCOME

Congratulations on your purchase and welcome to the Ariens family! Every snow thrower in the Ariens lineup is designed for long-lasting and unsurpassed performance. We are confident your machine will be part of your family for many years to come.

Have Questions or Need Assistance?

www.ariens.com

A service manual and a parts manual for your unit are available for free download or purchase at www.ariens.com.

REGISTER YOUR PRODUCT!

It is extremely important to register your product at time of purchase. Product registration activates the warranty and establishes a communication link from AriensCo.

Locate the model and serial number decal on your unit and register those numbers online at www.ariens.com. See Figure 1 for decal location. Be aware that the original selling dealer may have already completed product registration on behalf of the original purchaser.

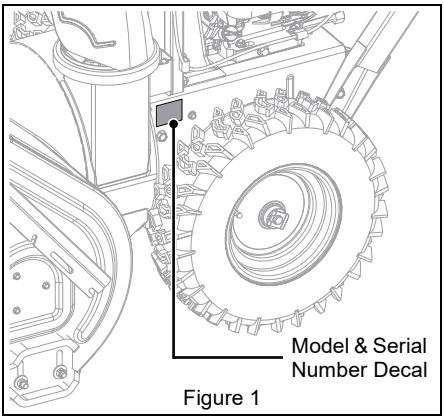

Figure 1

Record model number here.

Record serial number here.

MANUALS

Before operating or servicing the unit, carefully and completely read the manuals provided with the unit. They contain safety instructions and important information about unit controls.

The engine on this unit is covered by a separate manual. Refer to the engine manual for engine service recommendations. Contact the engine manufacturer for a replacement manual if necessary.

It is your responsibility to read and understand all safety precautions and instructions in the manuals. If you do not understand or have difficulty following the instructions, contact your Ariens dealer for assistance. To locate your nearest Ariens dealer, go to www.ariens.com.

DISCLAIMER

Ariens reserves the right to discontinue, make changes to, and add improvements upon its products at any time without public notice or obligation. The descriptions and specifications contained in this manual were in effect at printing. Equipment described in this manual may be optional. Some illustrations may not be applicable to your unit.

SAFETY

Read these safety rules and follow them closely. Failure to follow these rules could lead to loss of control of unit, severe personal injury or death to you or bystanders, or result in damage to property or the machine.

PRACTICES & LAWS

Practice usual and customary safe working precautions. Learn applicable rules and laws in your area. Always follow the practices set forth in this manual.

EMISSION CONTROL SYSTEM

This equipment and/or its engine may include exhaust and evaporative emissions control system components required to meet U.S. Environmental Protection Agency (EPA) and/or California Air Resources Board (CARB) regulations. Tampering with emission controls and components by unauthorized personnel may result in severe fines or penalties. Emission controls and components can only be adjusted by an Ariens dealer or an authorized engine manufacturer's service center. Contact your Ariens Equipment Retailer concerning emission controls and component questions.

REQUIRED OPERATOR TRAINING

Read and understand the Operator's Manual and decals on the unit. This information is for your safety and the proper use of your equipment. Failure to follow these instructions and warnings may cause death or serious injury. If you have purchased this product from an Ariens dealer, the dealer can provide you with training.

Familiarize yourself and any other operators with all controls and the safe use of the features of this unit. If you loan, rent or sell this product to others, provide them with all manuals.

If you have any questions, please call our customer support line at 920-756-4688 or contact us at www.ariens.com. Do not use this equipment if, after reading the Operator's Manual and the on-board decals, you have any questions about the safe use of this product.

WARNING: AVOID INJURY. This snow thrower is capable of crushing or amputating body parts. Failure to observe the safety instructions in the manuals and on decals could result in serious injury or death.

ALWAYS disengage auger, stop unit and engine, remove key and allow moving parts to stop before leaving operator's position.

SAFETY ALERT SYMBOL

This is the safety alert symbol. It means:

- **ATTENTION!**
- **YOUR SAFETY IS INVOLVED!**

When you see this symbol:

- **BECOME ALERT!**
- **OBEY THE MESSAGE!**

SIGNAL WORDS

The safety alert symbol above and signal words below are used on decals and in this manual. Read and understand all safety messages.

1. Danger

DANGER: Indicates an IMMINENTLY HAZARDOUS SITUATION! If not avoided, WILL RESULT in death or serious injury.

2. Warning

WARNING: Indicates a POTENTIALLY HAZARDOUS SITUATION! If not avoided, COULD RESULT in death or serious injury.

3. Caution

CAUTION: Indicates a POTENTIALLY HAZARDOUS SITUATION! If not avoided, MAY RESULT in minor or moderate injury. It may also be used to alert against unsafe practices.

4. Notice

NOTICE: Indicates information or procedures that are considered important but not hazard related. If not followed, property damage could result.

5. Important

IMPORTANT: Indicates general reference information worthy of special attention.

SAFETY DECALS

The safety decals on your machine are visual reminders of the important safety information in this manual. All messages on your unit must be fully understood and carefully followed. Safety decals on the machine are explained below.

Always replace missing or damaged safety decals. Replacement decal information is in the parts manual for your machine. Decals can be ordered from your dealer.

See Figure 2 for safety decal locations.

Safety Decal Locations

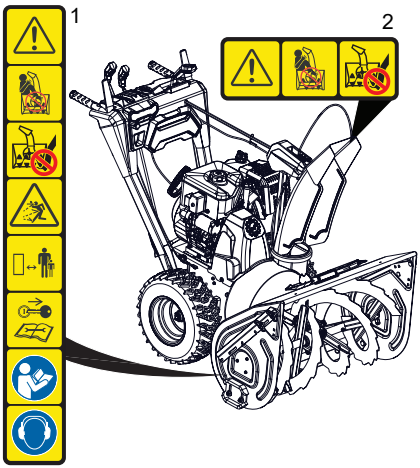

Figure 2

Safety Decal Descriptions

1. CAUTION!

Danger!

Only use clean-out tool to clear blockages. NEVER use your hands.

ROTATING PARTS! Only use clean-out tool to clear blockages. NEVER use your hands.

High-speed auger/impeller rotates below discharge opening. Wait for all moving parts to stop before removing clogs or servicing.

NEVER direct discharge towards persons or property that may be injured or damaged by thrown objects.

Keep people away from unit while operating. Keep children out of work area and under watchful care of a responsible adult.

Stop engine, remove key, and read manual before making any repairs or adjustments.

Read operator’s manual.

Wear appropriate hearing protection.

2. DANGER!

Danger!

ROTATING PARTS! Keep clear of auger while engine is running.

- Read operator's manual.
- Allow operation only by properly-trained adult, never children.
- Stop engine and remove ignition key prior to leaving the operator's position for any reason.
- Keep all controls, guards and safety devices properly serviced and functional.
- NEVER direct discharge towards persons or property that may be injured or damaged by thrown objects.

SAFETY RULES

The following safety instructions are based on the B71.3 specifications of the American National Standards Institute in effect at the time of production.

Training

Read, understand and follow all instructions on the machine and in the manual(s) before operating this unit. Be thoroughly familiar with the controls and the proper use of the equipment. Know how to stop the unit and disengage the controls quickly.

Never allow children to operate or play on or near the equipment. Never allow adults to operate the equipment without proper instruction.

Keep the area of operation clear of all persons, particularly small children. Be alert and shut off unit if children enter area.

Exercise caution to avoid slipping or falling, especially when operating the snow thrower in reverse.

Always remove key and/or wire from spark plug before assembly, maintenance or service. Unintentional engine start up can cause death or serious injury.

Complete a walk-around inspection of the unit to understand the unit, your work area and all safety decals.

Understand how to operate all controls, the functions of all controls and how to STOP in an emergency.

Preparation

Always check overhead and side clearances carefully before operation.

Always be aware of traffic when operating near streets or along curbs.

Thoroughly inspect the area where the equipment is to be used and remove all doormats, sleds, boards, toys, wires and other foreign objects.

Disengage all clutches and shift into neutral before starting the engine.

Use extension cords and receptacles as specified by the manufacturer for all units with electric drive motors or electric starting motors.

Handle fuel with care; it is highly flammable.

- Use an approved fuel container.
- Never add fuel to a running engine or hot engine.
- Fill fuel tank outdoors with extreme care. Never fill fuel tank indoors.
- Never fill containers inside a vehicle or on a truck or trailer bed with a plastic liner. Always place containers on the ground, away from your vehicle, before filling.
- When practical, remove gas-powered equipment from the truck or trailer and refuel it on the ground. If this is not possible, then refuel such equipment on a trailer with a portable container, rather than from a gasoline dispenser nozzle.
- Keep the nozzle in contact with the rim of the fuel tank or container opening at all times, until refueling is complete. Do not use a nozzle lock-open device.
- Replace gasoline cap securely and wipe up spilled fuel.
- If fuel is spilled on clothing, change clothing immediately.

Adjust the auger / impeller housing height to clear gravel or crushed rock surface.

Never attempt to make any adjustments while the engine is running (except when specifically recommended by manufacturer).
Always allow unit and engine to adjust to outdoor temperature before clearing snow.

Operation
Disengage all controls before starting engine.
Never leave a running unit unattended. Always stop engine and remove key before leaving unit to prevent unauthorized use.
Do not put hands or feet near or under rotating parts. Keep clear of the discharge opening at all times.
Moving and/or rotating parts can cut off body parts such as fingers or a hand. NEVER place your hands, other body part or clothing near any moving parts while unit is running.
Always keep hands away from all pinch points.
Do not touch parts which might be hot from operation. Allow parts to cool before attempting to maintain, adjust or service.
Thrown objects can cause injury. Check for weak spots on docks, ramps or floors. Avoid uneven work areas and rough terrain and stay alert for hidden hazards.
Exercise extreme caution when operating on or crossing gravel drives, walks or roads. Stay alert for hidden hazards or traffic.
After striking a foreign object, stop the engine, remove the wire from the spark plug, disconnect the cord on electric motors, thoroughly inspect the snow thrower for any damage, and repair the damage before restarting and operating the snow thrower.
If the unit should start to vibrate abnormally, stop the engine and check immediately for the cause. Vibration is generally a warning of trouble.
Stop the engine whenever you leave the operating position, before unclogging the auger / impeller housing or discharge chute, and when making any repairs, adjustments or inspections.
When cleaning, repairing or inspecting the snow thrower, stop the engine and make certain the auger / impeller and all moving parts have stopped. Disconnect the spark plug wire and keep the wire away from the plug to prevent someone from accidentally starting the engine.

Do not run the engine indoors, except when starting the engine and for transporting the snow thrower in or out of the building. Open the outside doors; exhaust fumes are dangerous.
Never operate the snow thrower without proper guards, and other safety protective devices in place and working.
Always stand clear of the discharge area when operating this unit.
Never direct the discharge toward people or areas where injury or property damage can occur from thrown objects. Keep children and others away.
Do not overload the machine capacity by attempting to clear snow at too fast a rate.
Never operate the machine at high transport speeds on slippery surfaces. Look behind and use care when operating in reverse.
Do not operate in reverse unless absolutely necessary. Always back up slowly and look down and behind before and while backing.
Do not carry passengers.
Disengage attachment when not in use and when traveling from one work area to another.
Disengage power to the auger / impeller when snow thrower is transported or not in use.
Use only attachments and accessories approved by the manufacturer of the snow thrower (such as wheel weights, counterweights or cabs).
This product is equipped with an internal combustion engine. Do not use unit on or near any unimproved, forest-covered or brush-covered land unless exhaust system is equipped with a spark arrester meeting applicable local, state or federal laws. A spark arrester, if used, must be maintained in effective working order by operator.
Never operate the snow thrower without good visibility or light. Always be sure of your footing, and keep a firm hold on the handles. Walk; never run.
Never operate unit after or during the use of medication, drugs or alcohol. Safe operation requires complete and unimpaired attention at all times.
Never allow anyone to operate this unit when their alertness or coordination is impaired.
Never touch a hot engine or muffler.

Avoid contact with sharp edges; sharp edges can cut.

Do not throw snow higher than necessary.

Clearing a Clogged Discharge Chute

Hand contact with the rotating auger / impeller inside the discharge chute is the most common cause of injury associated with snow throwers. Never use your hand to clean out the discharge chute.

To clear the chute:

1. SHUT THE ENGINE OFF!
2. Wait 10 seconds to be sure the auger / impeller blades have stopped rotating.
3. Always use a clean-out tool, not your hands.

Maintenance and Storage

Secure unit so it will not tip over during maintenance.

Before cleaning, removing clogs or making any inspections, repairs, etc., disengage clutch(es), stop engine, remove key, allow moving parts to stop and hot parts to cool.

Check shear bolts and other bolts at frequent intervals for proper tightness to be sure the equipment is in safe working condition.

Check clutch and brake operation frequently.

Do not change engine governor settings and do not over-speed engine.

Adjust and service as required. Motion of drive wheels and auger / impeller must stop quickly when clutch levers are released.

Always maintain unit in safe operating condition. Damaged or worn out muffler can cause fire or explosion.

Keep unit free of ice or other debris. Clean up oil or fuel spills.

Always keep protective structures, guards, and panels in good repair and secured in place. Never modify or remove safety devices.

Never store the machine with fuel in the fuel tank inside a building where ignition sources are present such as hot water heaters, space heaters or clothes dryers. Close fuel valve and allow the engine to cool completely before storing in any enclosure or covering the unit.

Always refer to operator's manual for important details if the snow thrower is to be stored for an extended period.

Maintain or replace safety and instruction labels as necessary.

Run the machine a few minutes after throwing snow to prevent freeze-up of the auger / impeller.

Personal Protection

Do not operate the equipment without wearing adequate winter garments. Avoid loose fitting clothing that can get caught in moving parts. Wear footwear that will improve footing on slippery surfaces.

Wear adequate safety gear, including safety glasses with side shields and protective gloves.

Do not wear loose clothing or jewelry, and tie back hair that may get caught in rotating parts.

NEVER attempt to unclog or clean unit while engine is running. Rotating auger / impeller can cause serious injury.

Protect eyes, face and head from objects that may be thrown from unit. Wear appropriate hearing protection.

Always wear safety glasses or eye shields during operation or while performing an adjustment or repair to protect eyes from foreign objects that may be thrown from the machine.

Slope Operation

Exercise extreme caution when operating on slopes. DO NOT operate on steep slopes. DO NOT clear snow across the face of slopes; go up and down. Keep all movement on slopes slow and gradual.

Use a slow speed to avoid stops or shifts on slopes. Avoid starting or stopping on a slope. Do not park unit on a slope unless absolutely necessary. When parking on a slope always block the wheels.

Do not operate near drop-offs, ditches, or embankments. Unit can suddenly turn over if a wheel is over the edge of a cliff or ditch, or if an edge caves in.

Fuel

DO NOT run engine in an enclosed area. Always provide good ventilation. Fumes from engine exhaust can cause injury or death.

Fuel is highly flammable and its vapors are explosive. Handle with care. Use only an approved gasoline container with an appropriately-sized dispensing spout.
No smoking, no sparks, no flames. Always allow engine to cool before servicing.
Never fill fuel tank when engine is running or hot from operation.
Never fill or drain fuel tank indoors.
Replace fuel cap securely and clean up spilled fuel.
Never fill fuel containers inside a vehicle or on a truck or trailer bed with a plastic liner. Always place containers on the ground away from your vehicle before filling.
When practical, remove gas-powered equipment from the truck or trailer and refuel it on the ground. If this is not possible, then refuel on a trailer with a portable container, rather than from a gasoline dispenser nozzle.
Keep the nozzle in contact with the rim of the fuel tank or container opening at all times until fueling is complete. Do not use a nozzle lock-open device.
If fuel is spilled on clothing, change clothing immediately.
Properly remove fuel before tipping unit up onto housing to avoid spills.

Towing / Transporting
Always stop engine, remove key and close fuel valve or drain fuel when transporting unit on a truck or trailer.
Use extra care when loading or unloading unit onto trailer or truck. Secure unit chassis to transport vehicle. Never secure from rods or linkages that could be damaged. Do not transport machine while engine is running.

Accessories
Use only AriensCo recommended attachments or accessories that are designed for your unit and that are appropriate to your use and can be used safely in your application.

CONTROLS & FEATURES

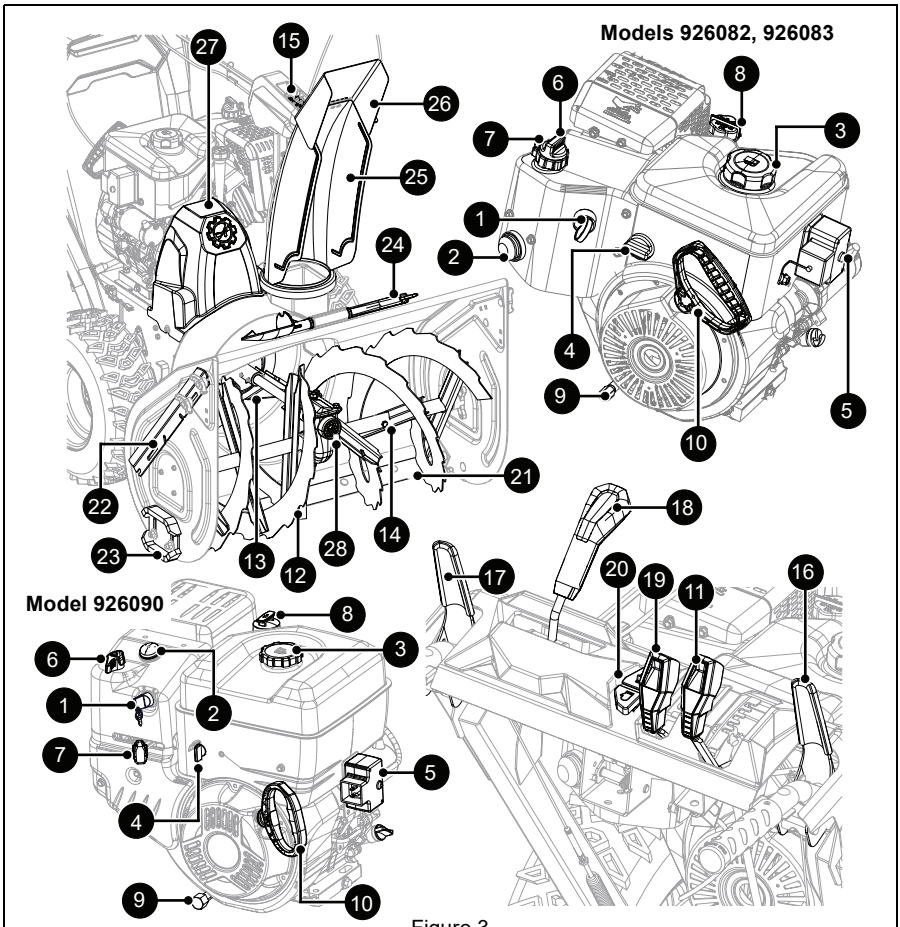

Figure 3

1. Engine Key
2. Primer Bulb
3. Fuel Tank and Cap
4. Fuel Valve
5. Electric Start Button
6. Choke Control Knob
7. Throttle Control Lever
8. Oil Fill / Dipstick
9. Oil Drain
10. Recoil Starter Handle
11. Speed Selector Lever
12. Auger
13. Impeller
14. Shear Bolt (2)
15. Replacement Shear Bolts (2)
16. Attachment Clutch Lever
17. Traction Drive Clutch Lever
18. Discharge Chute Rotation Lever
19. Discharge Chute Deflector Lever
20. Heated Hand Grip Switch
21. Scraper Blade
22. Drift Cutter (2)
23. Skid Shoe (2)
24. Snow Clean-out Tool
25. Discharge Chute
26. Discharge Chute Deflector
27. Belt Cover
28. Gearcase

⚠	**WARNING:** Read and understand the *Safety* section before proceeding.

See Figure 3 for all controls and features locations.

ENGINE KEY

Controls power to the engine. The key cannot be removed when in run position.

PRIMER BULB

Adds fuel to engine for easier start on cold engines.

FUEL VALVE

Controls fuel flow to the engine.

ELECTRIC START BUTTON

Starts a correctly choked engine.

CHOKE CONTROL KNOB

Controls airflow to the engine.

THROTTLE CONTROL LEVER

Controls engine speed.

SPEED SELECTOR LEVER

See Figure 4.

Controls the speed of forward and reverse travel.

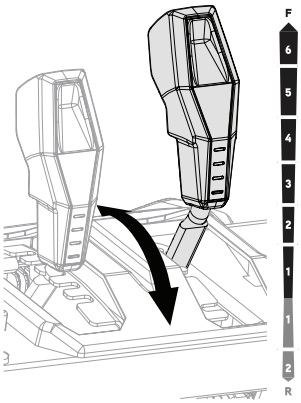

Figure 4

ATTACHMENT CLUTCH LEVER (RIGHT SIDE)

See Figure 5.

Controls auger / impeller movement.

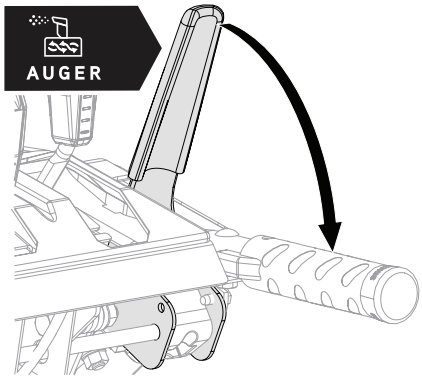

Figure 5

TRACTION DRIVE CLUTCH LEVER (LEFT SIDE)

See Figure 6.

Allows unit to travel forward and in reverse.

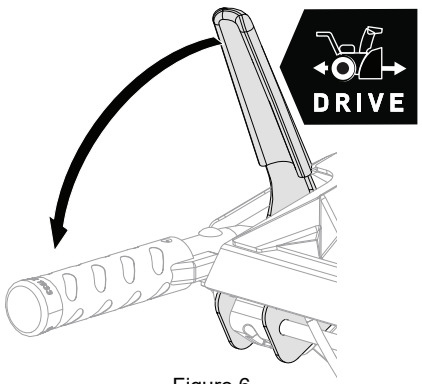

Figure 6

DUAL HANDLE INTERLOCK

Allows auger / impeller to rotate without holding attachment clutch lever continuously. Auger continues to turn until both clutch levers are released.

DISCHARGE CHUTE ROTATION LEVER

See Figure 7.

Rotates discharge chute to control snow discharge. Pull lever back to unlock chute, move lever left or right to desired position, and then push lever forward to lock chute in place.

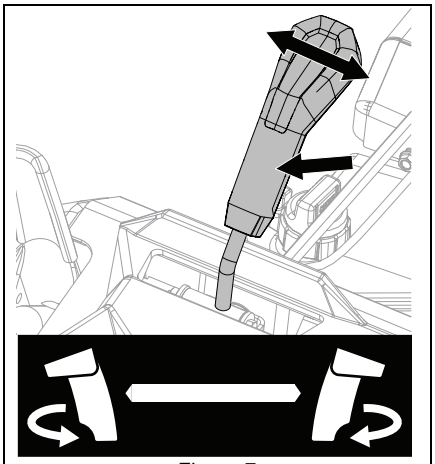

Figure 7

DISCHARGE CHUTE DEFLECTOR LEVER

See Figure 8.

Moves discharge deflector up or down to control height of snow discharge.

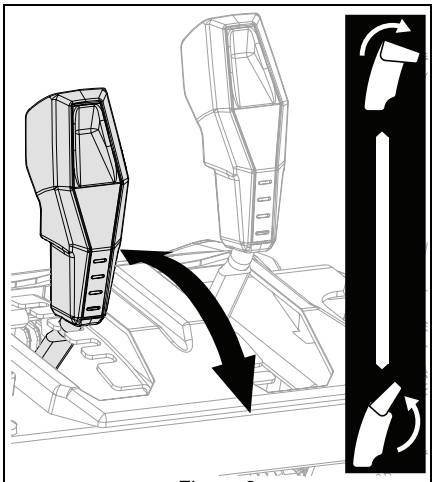

Figure 8

HEATED HAND GRIP SWITCH

Turns the heated hand grips on and off.

SCRAPER BLADE

Contacts the surface being cleared and protects the housing from damage during normal use.

DRIFT CUTTER

Breaks up snow drifts that are taller than the auger housing and directs snow into auger.

SKID SHOE

Controls the distance between the scraper blade and the surface.

AUGER

Rotates to bring snow into impeller.

IMPELLER

Throws snow out discharge chute.

SHEAR BOLT

Secures auger to shaft and helps prevent gearcase and gearcase component damage.

AUTO-TURN™ STEERING

Automatically locks or unlocks wheels or tracks to allow unit to turn more precisely.

OPERATION

WARNING: AVOID INJURY. Read and understand the *Safety* section before proceeding.

IMPORTANT: All references to left, right, front or rear are given from the perspective of operator in operator's position, facing the direction of forward travel.

EMERGENCY STOPPING

1. Release both clutch levers.
2. Remove engine key.
3. Wait for all moving parts to stop before leaving operator's position.

BEFORE OPERATING UNIT

IMPORTANT: Register your product! See *Register Your Product!* on page 1.

1. Check for a frozen impeller.
   a. Remove engine key.
   b. Engage attachment clutch lever and pull recoil starter handle.

c. If handle does not pull, move unit to a warm area to thaw.

2. Check fuel level and add fuel if needed.

IMPORTANT: Use fresh unleaded fuel with an octane rating of at least 87. DO NOT use E85 blended fuels; the engine is not E20 / E30 / E85 compatible. The maximum recommended ethanol content is 10%. Ariens recommends using a quality fuel stabilizer in all fuel. See *Short Term* on page 23.

3. Check engine oil level and add oil if needed. Refer to engine manual.
4. Check function of controls.
   - Attachment Clutch Lever
   - Traction Drive Clutch Lever
   - Dual Handle Interlock
5. Know how to stop in an emergency. See *Emergency Stopping* on page 10.

START THE ENGINE

1. *Electric Start:* Connect power cord to starter and then into 120V 3-wire grounded outlet.

IMPORTANT: Use a power cord that is UL listed or CSA certified, rated for a minimum of 13 amps, grounded and labeled as suitable for outdoor use.See *Accessories* on page 23.

All Models

2. Turn fuel valve to on position.
3. Insert engine key and turn to run position.
4. *Cold Engines Only:* Press primer bulb 2 times.
5. Turn choke control knob to on position.
6. Set throttle control lever to fast position.
7. *Electric Start:* Press electric start button.

NOTICE: DO NOT run starter more than 10 times at intervals of 5 seconds on / 5 seconds off or overheating and damage may occur.

8. *Recoil Start:* Pull recoil starter handle.
   a. Grasp handle and pull rope out slowly until it pulls harder.
   b. Pull handle firmly and quickly with a rapid, continuous full-arm stroke. Repeat until engine starts. If engine does not start, see *Troubleshooting* on page 21.
   c. Let handle rewind slowly after engine starts. DO NOT let handle snap against engine.
9. Gradually turn choke off as engine warms.
10. *Electric Start:* Disconnect power cord from outlet and then from starter.

OPERATE UNIT

1. Rotate discharge chute and move deflector to desired positions.
2. Select desired speed.
3. Engage attachment clutch.

NOTICE: Stop auger when traveling between work areas.

4. Engage traction drive clutch.

NOTICE: Release lever before changing speed.

IMPORTANT: When the unit is turned left or right, the Auto-Turn™ differential automatically unlocks wheels or tracks for easier turning. On a straight path, the differential locks both wheels or tracks in place for best traction.

Position Drift Cutters

Use drift cutters if snow to be cleared is higher than auger housing.

1. Loosen wing knobs and move drift cutter down. See Figure 9.

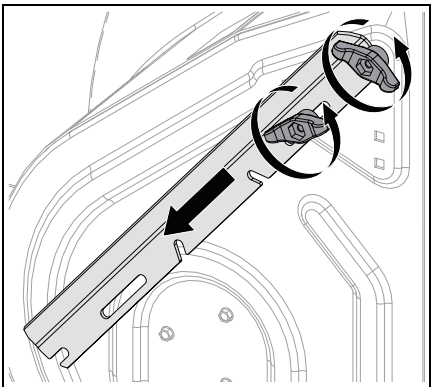

Figure 9

See Figure 10.

2. Rotate drift cutter forward 180 degrees until notch engages upper wing knob. Tighten wing knobs.
3. Repeat on other side.

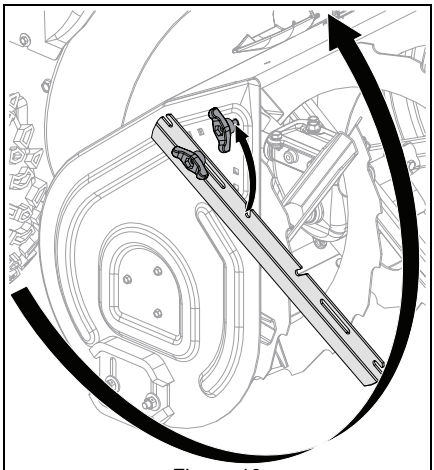

Figure 10

Clear a Clogged Discharge Chute

WARNING: NEVER use your hand to clean out discharge chute.

1. Stop engine, remove key and wait for all moving parts to stop and for hot parts to cool.
2. Use the snow clean-out tool to clear the clog.
3. Return the tool to its storage position on the auger housing.

STOP THE ENGINE

1. Release traction drive clutch lever.
2. Run auger / impeller for a few minutes to remove loose or melting snow to prevent impeller from freezing.
3. Release attachment clutch lever.
4. Move throttle control lever to the slow position.
5. Stop engine and remove key from unit.
6. Turn fuel valve to off position.

TRANSPORT UNIT

1. Stop engine, remove key and close fuel valve.
2. Secure unit chassis to transport vehicle.

NOTICE: NEVER secure from rods or linkages that could be damaged.

ENGINE OPERATION ANGLE

Engine angle during operation can affect how well the engine is lubricated regardless of oil level.

Operating beyond the engine manufacturer's recommended maximum angle will lead to premature engine wear and void the engine warranty. Refer to the engine operator's manual for maximum angle of operation.

MAINTENANCE

WARNING: Read and understand the *Safety* section before proceeding.

Your Ariens dealer can provide service and adjustments to keep your unit operating at peak efficiency. Contact an authorized engine manufacturer's service center for engine service.

SERVICE POSITION

See Figure 11.

WARNING: AVOID INJURY. Before tipping unit, close fuel valve and drain fuel from tank and fuel system. (Refer to engine manual for instructions.) Make sure unit is secure and will not tip.

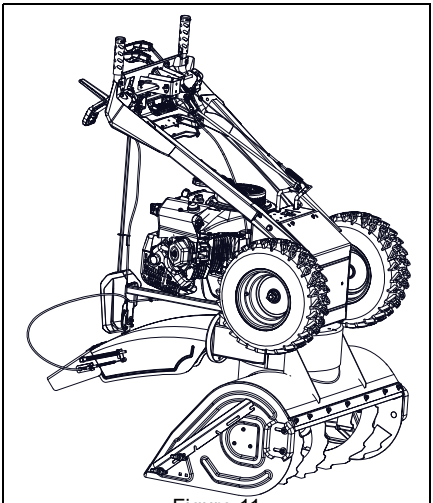

Figure 11

MAINTENANCE SCHEDULE

Service Performed	Each Use	Every 5 hrs.	Every 25 hrs.	Annually	As Needed.
Add Fuel Stabilizer *					
Check Attachment Drive Clutch Operation	•				
Check Traction Drive Clutch Operation	•				
Check Dual Handle Interlock	•				
Check Fasteners	•				
Check Tire Pressure			•	•	
Check Engine Oil **	•				
Change Engine Oil **				•	•
Replace Spark Plug **					•
General Lubrication			•	•	
Check Auger Gearcase Oil			•	•	

* See *Add Fuel Stabilizer* on page 13.

** Refer to engine manual for instructions.

SERVICE PARTS

See your Ariens dealer to purchase service parts for your unit.

Description	Part No.
Ariens Hi-Temp Grease – 414 ml (14 oz) cartridge	00036700
Ariens L3 Lube – 237 ml (8 oz)	00068800
Shear Bolt and Nut	52100100
Fuel Stabilizer – 118 ml (4 oz)	04730400
Gearcase Seal Washer	06400920
Ariens 5W-30 Engine Oil	
• 473 ml (16 oz)	00091000
• 946 ml (32 oz)	00067600
Ariens 0W-30 Synthetic Engine Oil	
• 591 ml (20 oz)	00077600
• 946 ml (32 oz)	00077900

ADD FUEL STABILIZER

Add fuel stabilizer to gasoline at time of purchase to help ensure the best performance over the life of that fuel. See *Short Term* on page 23 for instructions.

CHECK DUAL HANDLE INTERLOCK

1. Stop engine.
2. Engage attachment clutch and then the traction drive clutch.
3. Release the attachment clutch lever. The attachment clutch should stay engaged until the traction drive clutch lever is released.

IMPORTANT: If dual handle interlock does not operate correctly, repair as directed in the service manual for your unit.

CHECK FASTENERS

Check for loose hardware.

CHECK CLUTCH OPERATION

- Auger / impeller must stop within 5 seconds when attachment clutch lever is released.
- Wheels or tracks must stop quickly when traction drive clutch lever is released.

IMPORTANT: If clutches do not engage or disengage correctly, see *Adjust Attachment Clutch & Brake* on page 17 or *Adjust Traction Drive Clutch* on page 19. Refer to the service manual for your unit for more information about clutch repairs.

CHECK TIRE PRESSURE

Keep tires inflated to pressure listed on tire sidewall.

WARNING: AVOID INJURY. Explosive separation of tire and rim parts is possible.

- DO NOT inflate tires above the recommended pressure.
- DO NOT inflate tires with a compressor; use a hand pump.
- DO NOT stand in front of tire assembly when inflating. Use a clip-on chuck and extension hose long enough to allow you to stand to one side.
- DO NOT mount a tire without proper equipment and experience.

CHECK ENGINE OIL

NOTICE: Engine oil level must be maintained at correct level or engine damage may occur. Refer to engine manual.

CHANGE ENGINE OIL

Refer to engine manual.

CHECK AUGER GEARCASE OIL

1. Place unit on flat, level surface.
2. Remove oil fill plug. See Figure 12.

IMPORTANT: DO NOT remove gearcase cover.

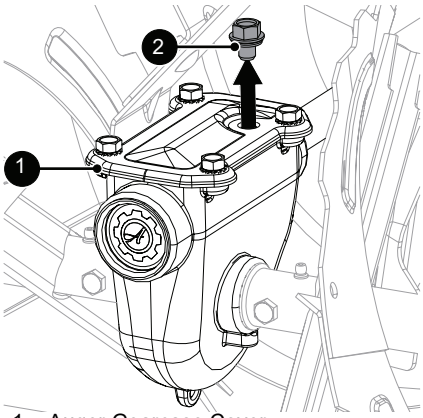

1. Auger Gearcase Cover
2. Oil Fill Plug

Figure 12

3. Check oil level with suitable measuring device, such as a clean screwdriver, and add oil if needed. Oil level must be 6.1 cm – 6.7 cm (2.4" – 2.6") from the flat surface of the gearcase cover.

IMPORTANT: Ariens recommends using only Ariens L3 synthetic severe duty gear lube (see *Service Parts* on page 13). Using other lubricants will not automatically void unit warranty, but the warranty will not cover damage caused by using unauthorized lubricants.

4. Inspect oil fill plug for wear or rubber deterioration and replace if needed.
5. Reinstall oil fill plug. Torque to 9 N•m (80 lb-in).

IMPORTANT: DO NOT over torque. Measurements are given in pound force inches (lb-in) and not pound force foot (lb-ft). Incorrect torquing and failure to install or correctly torque oil fill plug may void gearcase warranty.

LUBRICATE UNIT

Ariens recommends using Ariens Hi-Temp Grease or equivalent (see *Service Parts* on page 13) to lubricate fittings. Lubricate each season or every 25 hours of operation.

IMPORTANT: Wipe each fitting clean before and after lubrication.

IMPORTANT: DO NOT allow grease or oil to contact friction disc, friction plate or belts.

Use the following key for all lubrication procedures.

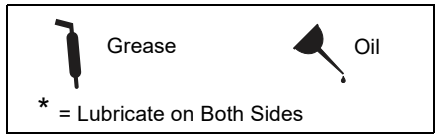

Traction Drive

1. Place unit in service position (see Figure 11) and remove bottom cover.
2. Lubricate as shown in Figure 13 and 14.

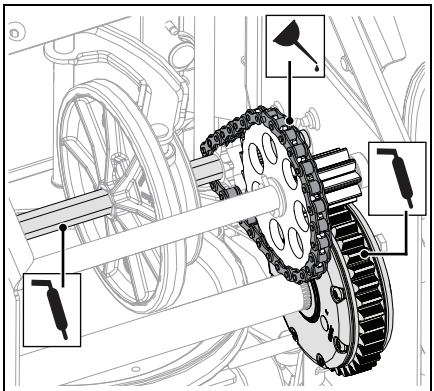

Figure 13

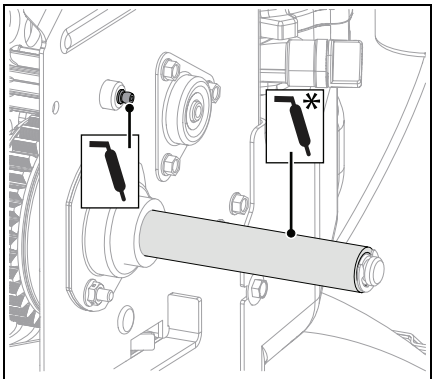

Figure 14

3. Reinstall bottom cover and return unit to operating position.

Auger Shaft

1. Remove shear bolt nuts and bolts.
2. Apply grease at the grease zerks. See Figure 15.

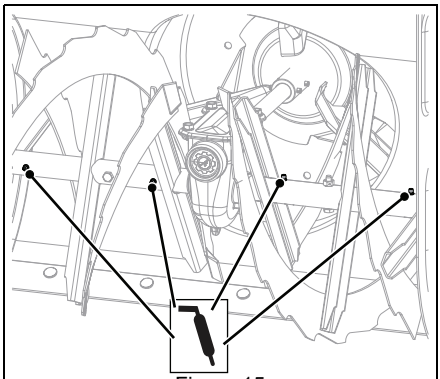

Figure 15

3. Hand rotate auger on auger shaft.

See Figure 16.

4. Align shear bolt holes in auger with shear bolt holes in shaft.
5. Insert bolts through holes.
6. Secure bolts with nuts.
7. Tighten bolts to 7.9 N•m – 16.5 N•m (5.8 lb-ft – 12.2 lb-ft). If a torque wrench is unavailable, tighten bolts until they no longer spin freely. DO NOT overtighten.

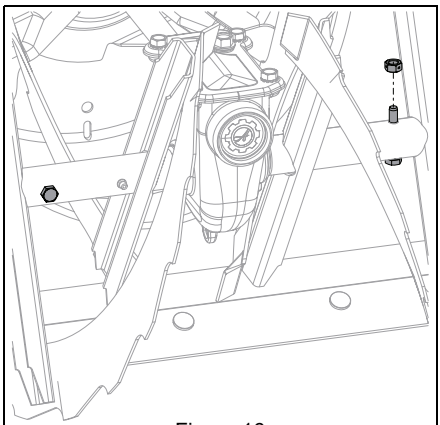

Figure 16

ADJUSTMENTS

WARNING: AVOID INJURY. Read and understand the *Safety* section before proceeding.

ADJUST SCRAPER BLADE

The auger housing may be damaged if blade wears down too much.

1. Tip unit back onto handlebar, support auger housing and loosen nuts retaining blade.
2. Lower blade and tighten nuts.
3. Adjust skid shoes. See *Adjust Skid Shoes* on page 15.

NOTICE: ALWAYS adjust skid shoes after adjusting blade to prevent premature wear of blade and auger housing damage.

ADJUST SKID SHOES

See Figure 17.

1. Place unit on a hard, flat surface.
2. Place a spacer under each scraper blade end.
   - Use two 3 mm (1/8") thick spacers for hard, smooth surfaces.
   - Use two 22 mm (7/8") thick spacers for uneven or gravel surfaces.
3. Loosen skid shoe hardware and lower skid shoes to contact surface. Adjust both shoes equally.

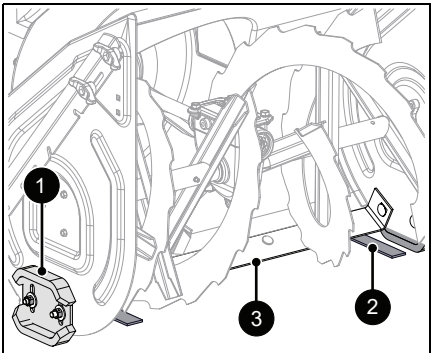

1. Skid Shoe
2. Spacer
3. Scraper Blade

Figure 17

4. Tighten skid shoe hardware.

REPLACE SHEAR BOLTS

Replace shear bolts if obstruction stops auger rotation and shear bolts break. See Figure 18.

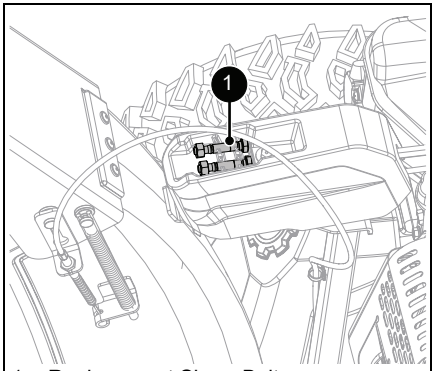

1. Replacement Shear Bolts

Figure 18

IMPORTANT: Ariens recommends using only Ariens OEM shear bolts when replacing shear bolts. See *Service Parts* on page 13.

See Figure 16.

2. Align shear bolt holes in auger with shear bolt holes in the shaft.
3. Insert bolts through holes.
4. Secure bolts with nuts.
5. Tighten bolts to 7.9 N•m – 16.5 N•m (5.8 lb-ft – 12.2 lb-ft). If a torque wrench is unavailable, tighten bolts until they no longer spin freely. DO NOT overtighten.

ADJUST DISCHARGE CHUTE DEFLECTOR LEVER

See Figure 19.

If deflector does not stay in selected position, tighten the nut under the control panel.

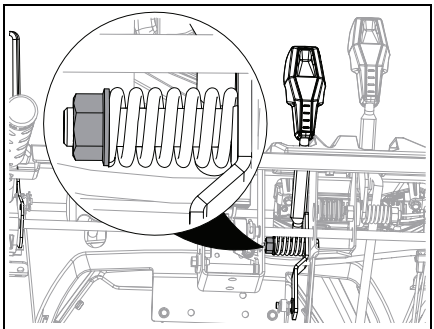

Figure 19

If deflector does not follow full range of travel:

1. Position deflector control in the rear-most position.
2. Adjust nuts on chute cable. See Figure 20.
   - To adjust deflector lower, loosen lower nut and tighten upper nut.
   - To adjust deflector higher, loosen upper nut and tighten lower nut.

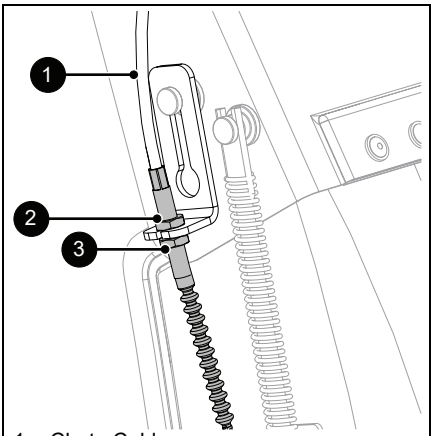

1. Chute Cable
2. Upper Adjustment Nut
3. Lower Adjustment Nut

Figure 20

ADJUST DISCHARGE CHUTE

See Figure 21.

If discharge chute does not stay in selected position:

1. Remove discharge chute gear cover.
2. Loosen rear adjustment nut and tighten forward adjustment nut until the lock arm engages the gear teeth.
3. Reinstall gear cover.

If discharge chute does not rotate freely:

1. Remove discharge chute gear cover.
2. Loosen forward adjustment nut and tighten rear adjustment nut until there is no cable slack and the lock arm engages the gear teeth.
3. Reinstall gear cover.

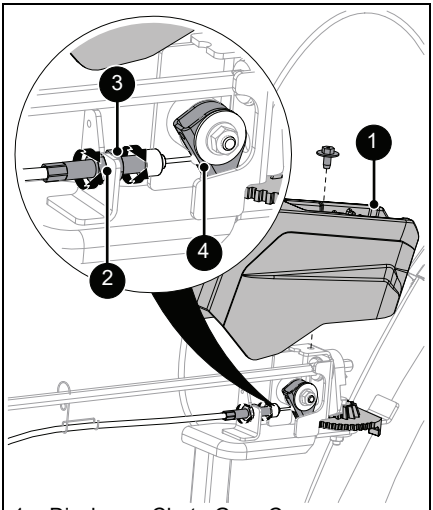

1. Discharge Chute Gear Cover
2. Rear Adjustment Nut
3. Forward Adjustment Nut
4. Lock Arm

Figure 21

ADJUST SPEED SELECTOR LEVER

See Figure 22.

1. Disconnect adjustment pivot pin from speed selector arm. Save hardware for reinstallation.
2. Position speed selector lever in fastest forward position.
3. Turn speed selector arm down as far as it will go.
4. Loosen jam nut on shift rod.
5. Thread adjustment pivot pin along shift rod until it aligns with the mating hole on the speed selector arm, and then insert the pivot pin in the hole.
6. Tighten jam nut.
7. Connect pivot pin to speed selector arm with hardware removed in step 1 and check forward and reverse speeds.
   a. Start unit, position speed selector lever in the first forward position and engage traction drive clutch. Unit should move forward.
   b. Stop unit, position speed selector lever in the first reverse position and engage traction drive clutch. Unit should move in reverse.
   c. Stop unit. If unit does not travel correctly, repeat adjustments.

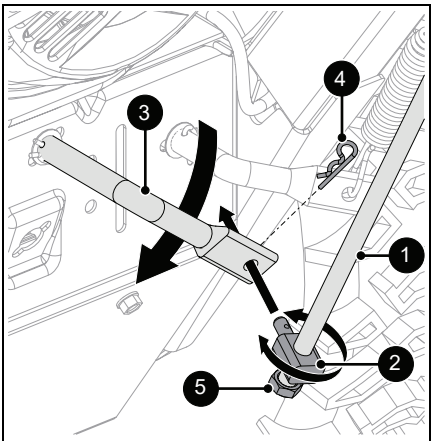

1. Shift Rod
2. Adjustment Pivot Pin
3. Speed Selector Arm
4. Hairpin
5. Jam Nut

Figure 22

ADJUST ATTACHMENT CLUTCH & BRAKE

WARNING: AVOID INJURY. Improper adjustment could result in unexpected movement of auger and impeller causing death or serious injury. AUGER / IMPELLER MUST STOP within 5 seconds when attachment clutch lever is released.

Remove Slack from Attachment Cable

1. Stop engine, remove key and wait for all moving parts to stop and for hot parts to cool.
2. Disconnect spark plug wire.
3. Loosen hardware securing belt cover to unit and remove belt cover.

IMPORTANT: DO NOT completely remove hardware from unit.

4. Loosen jam nut on cable adjustment barrel, and then turn the adjustment barrel down to shorten cable and remove cable slack. See Figure 23.

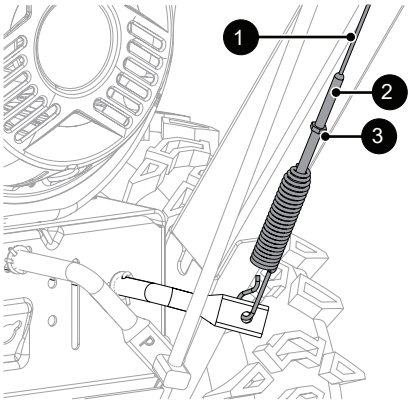

1. Attachment Clutch Cable
2. Cable Adjustment Barrel
3. Jam Nut

Figure 23

5. With the attachment clutch disengaged, make sure auger idler arm lightly touches the frame. See Figure 24.

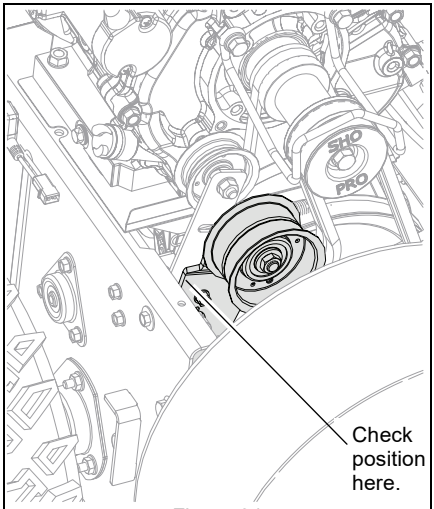

Figure 24

6. Tighten jam nut on cable adjustment barrel. See Figure 23.
7. Reinstall belt cover and tighten hardware.
8. Reconnect spark plug wire.

Check Attachment Idler Arm Roller Clearance

1. Place unit in service position and remove bottom cover.
2. Engage attachment clutch and check the clearance between the frame and plastic roller on the lower end of the attachment idler arm. Roller should be 12.7 mm – 22.2 mm (1/2" – 7/8") from the frame. See Figure 25.

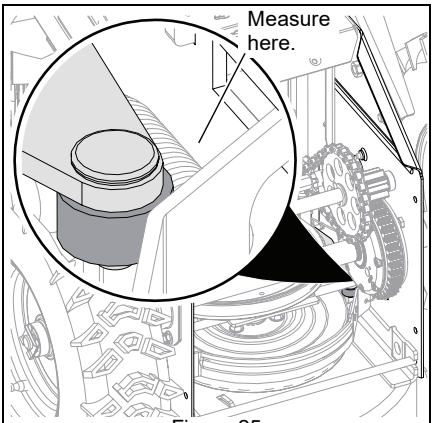

Figure 25

- If roller is 12.7 mm – 22.2 mm (1/2" – 7/8") from frame, no further adjustment is required.

See Figure 26.

- If roller is less than 12.7 mm (1/2") from frame, loosen idler adjustment nut and move idler closer to belt. Tighten adjustment nut and recheck roller clearance.
- If roller is more than 22.2 mm (7/8") from frame, loosen idler adjustment nut and move idler away from belt. Tighten adjustment nut and recheck roller clearance.

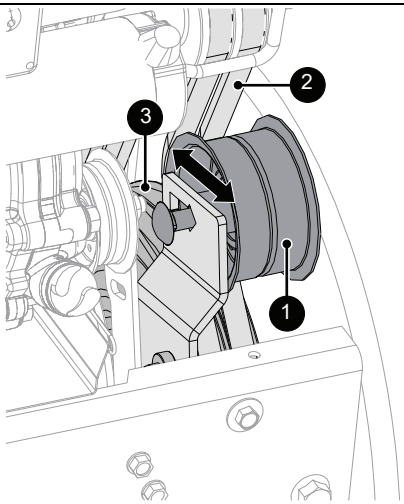

1. Idler
2. Belt
3. Pulley

Figure 26

Check Attachment Brake

With the attachment clutch disengaged, brake pad must contact attachment belt or pulley, whichever is closest. With attachment clutch engaged, brake pad must be a minimum of 1.6 mm (1/16") from belt or pulley.See Figure 27.

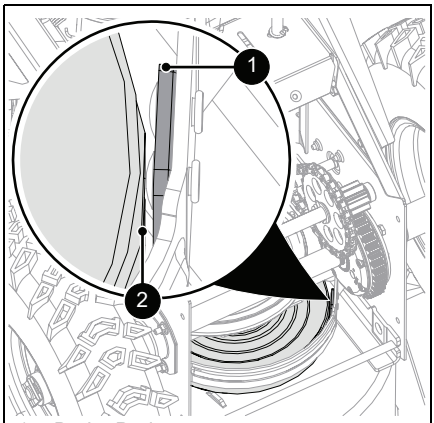

1. Brake Pad
2. Attachment Pulley

Figure 27

- If there is less than 1.6 mm (1/16") gap, loosen idler adjustment nut and move idler away from belt or pulley. Position idler to achieve a 1.6 mm (1/16") minimum brake pad gap and a 12.7 mm – 22.2 mm (1/2" – 7/8") gap between the plastic roller and the frame. See Figure 26.

IMPORTANT: If adjustments cannot be brought into specified ranges, see your dealer for repair.

Check Belt Finger Clearance

See Figure 28.

With attachment clutch engaged, the belt finger located opposite the belt idler must be less than 3.2 mm (1/8") from belts, but must not touch the belts.

To adjust belt finger:

1. Remove belt cover.
2. Loosen bolts and move belt finger to correct position.
3. Tighten bolts and recheck belt finger clearance.
4. Reinstall belt cover and tighten hardware.

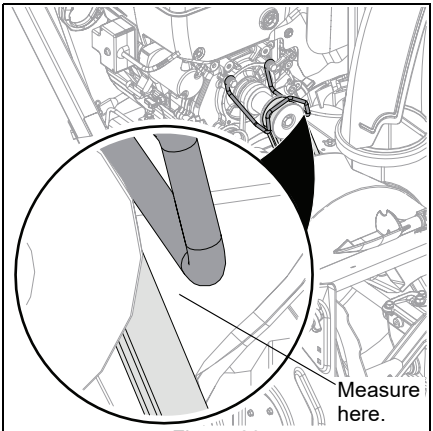

Figure 28

ADJUST TRACTION DRIVE CLUTCH

See Figure 29.

If unit does not drive correctly, adjust traction clutch to compensate for friction disc wear.

1. Stop engine, remove key and wait for all moving parts to stop and for hot parts to cool.
2. Disconnect spark plug wire.
3. Loosen jam nut on traction cable adjustment barrel, and then turn adjustment barrel down to shorten cable and remove cable slack.

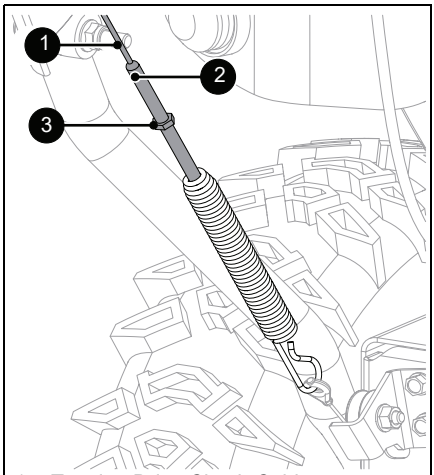

1. Traction Drive Clutch Cable
2. Cable Adjustment Barrel
3. Jam Nut

Figure 29

4. With traction clutch disengaged, check that the drive plate touches the stop bolt. See Figure 30.

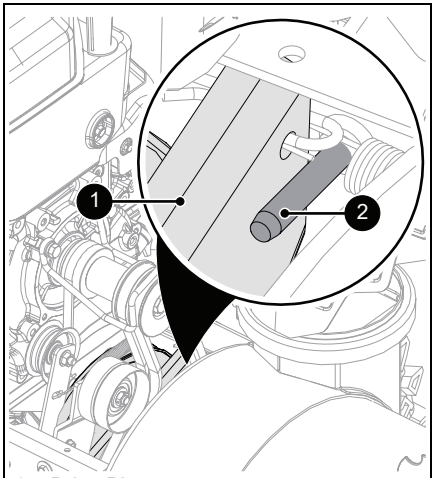

1. Drive Plate
2. Stop Bolt

Figure 30

5. Reconnect spark plug wire.

TROUBLESHOOTING

Problem	Probable Cause	Correction
Engine will not start.	Engine is turned off.	Turn engine key to run position. See *Engine Key* on page 9.
	Choke is off.	Turn choke control knob to on position. See *Choke Control Knob* on page 9.
	Fuel valve is closed.	Open valve. See *Fuel Valve* on page 9.
	Fuel tank is empty.	Fill tank with fuel. See *Before Operating Unit* on page 10.
	Engine is not primed.	If engine is cold, press primer bulb two times and start engine. Do not prime a warm engine. See *Primer Bulb* on page 9.
	Ignition switch starter circuit is not functioning.	See your dealer for repair.
	Build up of dirt and residue around governor / carburetor.	Clean area around governor / carburetor. See the service manual for your unit.
	Spark plug wire is disconnected.	Connect spark plug. Refer to engine manual.
	Spark plug is faulty.	Replace spark plug. Refer to engine manual.
	Excessive fuel in engine cylinder (flooded).	Turn choke control knob to off position and reattempt starting. See *Start The Engine* on page 11.
	Engine is faulty.	See your Ariens dealer or authorized engine manufacturer's service center.
Engine starts hard or runs poorly.	Fuel mixture is too rich.	Turn choke control knob to off position. See *Start The Engine* on page 11.
	Spark plug is faulty, fouled or incorrectly gapped.	Clean and correctly set spark plug gap (refer to engine manual) or see your Ariens dealer.
	Fuel cap vent is blocked.	Install new fuel cap.
Engine stops.	Fuel tank is empty.	Fill tank with fuel. See *Before Operating Unit* on page 10.
	Fuel valve is closed.	Open valve. See *Fuel Valve* on page 9.
	Obstruction in auger or impeller.	Stop engine, remove key and wait for all moving parts to stop. Check for and remove obstruction before restarting.
	Contaminated fuel supply.	Replace with clean fuel.
	Spark plug is faulty.	Replace or clean spark plug. Refer to engine manual.
	Fuel cap vent is blocked.	Install new fuel cap.
Unit runs briefly then stops.	A build up of fumes in the fuel tank is creating too much pressure in the fuel tank.	Slowly loosen the fuel tank cap.
Unit does not drive forward or in reverse.	Friction disc is worn.	Replace friction disc. Refer to the service manual for your unit.
	Traction drive cable is not adjusted correctly.	Remove slack from cable. See *Adjust Traction Drive Clutch* on page 19.
	Speed selector is not adjusted correctly.	Adjust speed selector. See *Adjust Speed Selector Lever* on page 17.

TROUBLESHOOTING

Problem	Probable Cause	Correction
Unit does not throw snow or throws it poorly.	Shear bolts are broken.	See *Replace Shear bolts* on page 16.
	Attachment clutch / brake is not adjusted correctly.	See *Adjust Attachment Clutch & Brake* on page 17.
	Impeller is frozen in place.	Move unit to a warm place to thaw.
	Ice or debris is obstructing auger.	Stop engine, remove key and wait for moving parts to stop. Check for and remove obstruction before restarting.
	Discharge chute is clogged with snow.	Stop engine, remove key and wait for all moving parts to stop and for hot parts to cool. Clean discharge chute and auger housing with clean-out tool. DO NOT use your hands.
	Auger drive belt is slipping, worn or damaged.	Adjust or replace auger drive belt. Refer to the service manual for your unit.
	Auger drive belt is loose or damaged.	Replace belt or adjust auger control cable. Refer to the service manual for your unit.
Excessive snow is left behind.	Scraper blade is worn or damaged.	Adjust when worn and replace when damaged or when blade has been adjusted down as far as possible and does not touch ground or clear correctly. See *Adjust Scraper Blade* on page 15.
Unit pulls to the left or right.	Skid shoes and scraper blade need adjustment.	Adjust skid shoes and scraper blade. See *Adjust Skid Shoes* and *Adjust Scraper Blade* on page 15.
Belt squeals continuously.	Impeller may be frozen.	Move unit to a warm area to thaw.
	Attachment clutch needs adjustment.	See *Adjust Attachment Clutch & Brake* on page 17.
Small rubber beads collect in frame.	Friction disc wear.	This is normal friction disc wear and no correction is needed unless there are chunks or large pieces of rubber collecting in frame. If repair is needed, refer to the service manual for your unit.

STORAGE

WARNING: AVOID INJURY. Read and understand the *Safety* section before proceeding.

SHORT TERM

1. Run auger / impeller for a few minutes to remove loose or melting snow to prevent impeller from freezing.
2. Tighten all hardware to correct specifications.
3. Inspect unit for visible signs of wear or damage. Repair as needed.
4. Apply a light layer of oil or anti-rust compound on bare metal areas.
5. Prepare fuel system for storage.

NOTICE: Ariens recommends using a quality fuel stabilizer in all fuel. Gasoline left in the fuel system without a stabilizer, even for short periods of time, deteriorates and leaves gummy deposits in the system that may damage the carburetor and fuel hoses, filter and tank. For the best effectiveness, add stabilizer to all fuel containers whenever purchasing fuel. Add the stabilizer to the container before adding fuel.

   a. Add Ariens fuel stabilizer (see *Service Parts* on page 13) or equivalent according to manufacturer's instructions to the fuel tank and any fuel containers with remaining fuel.
   b. Run engine outdoors for at least 5 minutes to allow stabilizer to reach the carburetor.

6. Close fuel valve and allow engine to stop on its own.
7. Remove engine key.
8. Store unit in a cool, dry, protected area. Do not store unit outdoors.

LONG TERM

1. Perform all short-term storage items.
2. Wash salt and other corrosive ice-melting agent residue from unit with mild soap and low-pressure water.

IMPORTANT: Never spray unit with high-pressure water.

3. Lubricate as directed in *Maintenance* on page 12.
4. Touch up all scratched painted surfaces.
5. Remove weight from wheels or tracks by putting blocks under frame or axle.
6. Store unit in a cool, dry, protected area. Do not store unit outdoors.

START-OF-SEASON FUEL PREPARATION

Before opening the fuel valve for the first time after long-term storage, add fresh, stabilizer-treated fuel to the fuel tank and any fuel containers with remaining fuel.

ACCESSORIES

See your Ariens dealer for a complete list of compatible accessories and attachments for your unit.

Description	Part No.
Front Weight Kit	72406500
Composite Skid Shoe Kit (Set of 2)	72603100
Cover	72601500
Snow Cab	72103300
36" Snow Brush Kit	82600300
16" x 8" Tire Chain Set	72601800
Protective Floor Mat	70706700
120V Extension Cord	02483100

SPECIFICATIONS

Model Number	**926082**	**926083**	**926090**
Description	Pro 32	Pro 28	Pro 28
Engine	Ariens AX		Briggs & Stratton Polar Force Pro 2100
Gross Torque* – N•m (lb-ft)	28.5 (21.0)		
Displacement – cm^3 (in^3)	420.0 (25.6)		
Maximum RPM – No load	3600 ± 100		
Electric Start	120V		
Fuel Tank Capacity – liter (qt)	2.8 (3.0)		5.6 (5.9)
Headlight	LED		
Chute			
Chute Rotation Angle	200°		
Rotation Control	Quick Turn		
Deflector Control	In-dash Lever		
Auger			
Snow Clearing Width – cm (in)	81.3 (32.0)	71.1 (28.0)	
Gearcase	Cast Iron		
Auger Diameter – cm (in)	40.6 (16.0)		
Impeller			
Impeller Diameter – cm (in)	35.6 (14.0)		
Impeller Speed (RPM)	1059		
Impeller Tip Speed – m/sec (ft/sec)	19.7 (71.0)		
Drive			
Auger	Dual HA Belt		
Traction	Disc-O-Matic®		
Speeds	6 Forward and 2 Reverse		
Axle Control	Auto-Turn™		
Tires			
Size – in	16 x 6.50-8 Directional	16 x 4.80-8 Directional	
Pressure	See tire sidewall.		
Size and Weight			
Length – cm (in)	153.2 (60.3)		
Height – cm (in)	118.4 (46.6)		
Width – cm (in)	86.9 (34.2)	76.7 (30.2)	
Weight – kg (lb)	153.8 (339.1)	151.3 (333.6)	

*Engine output stated in gross torque per SAE J1940 as rated by engine manufacturer.

Outdoor Power Equipment Limited Warranty

AriensCo warrants to the **original purchaser** that Ariens brand products purchased on or after 1/1/2021 will be free from defects in material and workmanship for the time period noted in the chart below. Equipment put to personal use around a single household or residence is considered “Residential Use.” Equipment put to any business use (agricultural, commercial, or industrial) or used at multiple locations is considered “Commercial Use.” If any product is rented or leased, then the duration of these warranties shall be 90 days after the date of purchase.

An authorized Ariens dealer will repair any defect in material or workmanship, and repair or replace any defective part, subject to the conditions, limitations and exclusions set forth herein. Such repair or replacement will be free of charge (labor and parts) to the original purchaser; except as noted below. Pick-up and delivery are at the owner’s expense.

The warranty code is found on the model and serial number identification label on the unit.

Warranty Code	Product Group	Warranty Period
AA	Serialized Attachments	1 Year.
CH	Zenith Mowers (Non-European Models)	4 Years or 750 Hours.*
CQ	Zenith Mowers (European Models)	2 Years.
HD	LM-Series Walk-Behind Mowers	3 Years Residential Use. 90 Days Commercial Use.
HE	Edge Mowers	2 Years or 150 Hours.*
HF	Ikon-XD Mowers	3 Years or 300 Hours.*
HH	Apex Mowers	4 Years or 500 Hours.*
PA	921-Series Brushes	3 Years Residential Use. 90 Days Commercial Use.
PB	926-Series Brushes	3 Years Residential Use. 1 Year Commercial Use.
SA	Professional Sno-Thro	3 Years Residential Use. 1 Year Commercial Use.
SB	Compact, Deluxe and Platinum Sno-Thro and Path-Pro	3 Years Residential Use. 90 Days Commercial Use.
SC	S18	2 Years Residential Use. 90 Days Commercial Use.
SD	Deluxe and Platinum EFI Sno-Thro	3 Years Residential Use. 90 Days Commercial Use.
SE	920-Series Classic Sno-Thro, Crossover	3 Years Residential Use. 90 Days Commercial Use.

* Whichever comes first.

Special Extensions

The chart below details special **extensions** to warranty terms. Warranty terms are total time periods covered. If any product is rented or leased, there are no extensions to the 90-day warranty.

Warranty Code	Warranty Term Extension	Warranty Period
SA	Cast Iron Auger Gear Case	5 Years.
SB, SD	Cast Iron Auger Gear Case	5 Years Residential Use. 1 Year Commercial Use.

Exclusions and Limitations

The charts below detail special **exclusions and limitations** to this warranty.

Warranty Term Exclusions	Warranty Period
Air filters, auger paddles, brake arms, brake linings, brake shoes, brushes, cutters, fuel filters, halogen headlights, knives, halogen light bulbs, lubricants, mower blades, oil, oil filters, spark plugs, scraper blades, shear bolts and skid shoes.	Components are not covered under warranty.

Hydro-Gear Transaxle Limitation
See Hydro-Gear warranty. The warranty is administrated by AriensCo. Refer to www.ariens.com for warranty statement.

Warranty Term Limitations	Warranty Period
Cloth, Plastic and Rubber Components. Mufflers, Tires and Belts.	Components are covered for manufacturer's defect only, not wear.

Exclusions – Items Not Covered by This Warranty

- Parts that are not genuine Ariens service parts are not covered by this warranty and may void the warranty if the parts result in premature wear or damage to the product.
- Damages resulting from the installation or use of any part, accessory, or attachment which is not approved by AriensCo for use with product(s) identified herein are not covered by this warranty.
- Any misuse, alteration, improper assembly, improper adjustment, neglect, or accident which requires repair is not covered by this warranty.
- Repairs or adjustments required due to failure to use fresh fuel or failure to properly prepare the unit for periods of non-use.
- **Use of gasoline blends exceeding 10% ethanol voids any and all warranties.**
- **Any tampering with the hour meter voids any and all warranties.**
- Products are designed to the specifications in the area that the product was originally distributed. Different areas may have significantly different legal and design requirements. This warranty is limited to the requirements in the area in which the unit was originally distributed. AriensCo does not warrant this product to the requirements of any other area. Warranty service is limited to service within the area originally distributed.
- In countries other than the United States and Canada, contact the AriensCo dealer for warranty policies that govern within your country. Rights may vary from country to country and within any one country.

Evaporative Emissions Control Warranty Exception

As required by the California Air Resources Board (CARB) and the US Environmental Protection Agency (EPA) the evaporative emissions control system is warranted to the ultimate purchaser, and any subsequent owner, for two years.

The CARB and EPA evaporative emissions control system warranty is described in a separate evaporative emission control warranty statement.

Battery Warranty

Battery warranty is one year. Units used for rental or lease have no exceptions to the 90-day warranty. Total battery claim reimbursement will not exceed 45.00 USD.

Engines

The chart below details engine warranty information. Engine warranty terms may vary from the specific terms of this warranty. If inconsistent, the terms of the engine warranty shall apply to the engine and its component parts.

Engine Manufacturer	Detail
Ariens AX	Ariens-branded engines are warranted by the manufacturer and the warranty is administrated by AriensCo. Refer to the engine manual or www.ariens.com for warranty statements.
Briggs & Stratton, Kawasaki, Kohler	Covered by the engine manufacturer's warranty. Refer to the engine manufacturer's warranty statements.

Parts and Accessories

Service replacement parts and non-serialized accessories are warranted for 90 days from date of purchase. Labor is not included.

Customer Responsibilities

Register the product immediately at the time of sale. If the dealer does not register the product, the customer must register the unit on-line at www.ariens.com.

To obtain warranty service, the **original purchaser** must:

- Ensure that the maintenance and adjustments explained in the Operator's Manual are routinely completed.
- Promptly notify AriensCo or an authorized Ariens service representative of the need for warranty service.
- Transport the product to and from the place of warranty service at owner's expense.
- Have the warranty service performed by an authorized Ariens service representative.

To find an authorized dealer use the dealer locator on our websites, or contact us by mail or phone.

Globally (Except Australia or New Zealand):	Australia:	New Zealand:
AriensCo 655 W. Ryan Street Brillion, WI 54110 Phone: (920) 756 - 4688 www.ariensco.com	Masport Australia Pty Ltd 27 Commercial Drive Dandenong South Victoria 3175 Australia Phone: 1300 366 225 www.masport.com.au	Masport Ltd 320 Ti Rakau Drive East Tamaki Auckland 2013 New Zealand Phone: 0800 627 7678 www.masport.co.nz

Disclaimer

AriensCo may from time to time change the design of its products. Nothing contained in this warranty shall be construed as obligating the AriensCo to incorporate such design changes into previously manufactured products, nor shall such changes be construed as an admission that previous designs were defective.

Limitation of Remedy and Damages

AriensCo liability under this warranty, and under any implied warranty that may exist, is limited to repair of any defect in workmanship, and repair or replacement of any defective part. AriensCo shall not be liable for incidental, special, or consequential damages (including lost profits). Some states do not allow the exclusion of incidental or consequential damages, so the above limitation or exclusion may not apply to you.

AriensCo shall not be held liable for damages, including premature wear and tear, or injuries caused by installation of unauthorized parts and accessories or for parts and accessories not installed by an authorized Ariens dealer.

Australian Consumer Law

The following applies solely to warranties subject to Subsection 102(1) of the Australian Consumer Law: Our goods come with guarantees that cannot be excluded by the Australian Consumer Law. You are entitled to a replacement or refund for a major failure and for compensation for any other reasonably foreseeable loss or damage. You are also entitled to have the goods repaired or replaced if the goods fail to be of acceptable quality and failure does not amount to a major failure.

Disclaimer of Further Warranty

AriensCo makes no warranty, express or implied, other than what is expressly made in this warranty. If the law of your state provides that an implied warranty of merchantability, or an implied warranty of fitness for particular purpose, or any other implied warranty, applies to AriensCo, then any such implied warranty is limited to the duration of this warranty. Some states do not allow limitations on how long an implied warranty lasts, so the above limitation may not apply to you.

This warranty gives you specific legal rights, and you may also have other rights which vary from region to region.

655 West Ryan Street
Brillion, WI 54110

www.ariens.com

parts.ariens.com

WARNING: Cancer and Reproductive Harm - www.P65Warnings.ca.gov

PRINTED in WISCONSIN