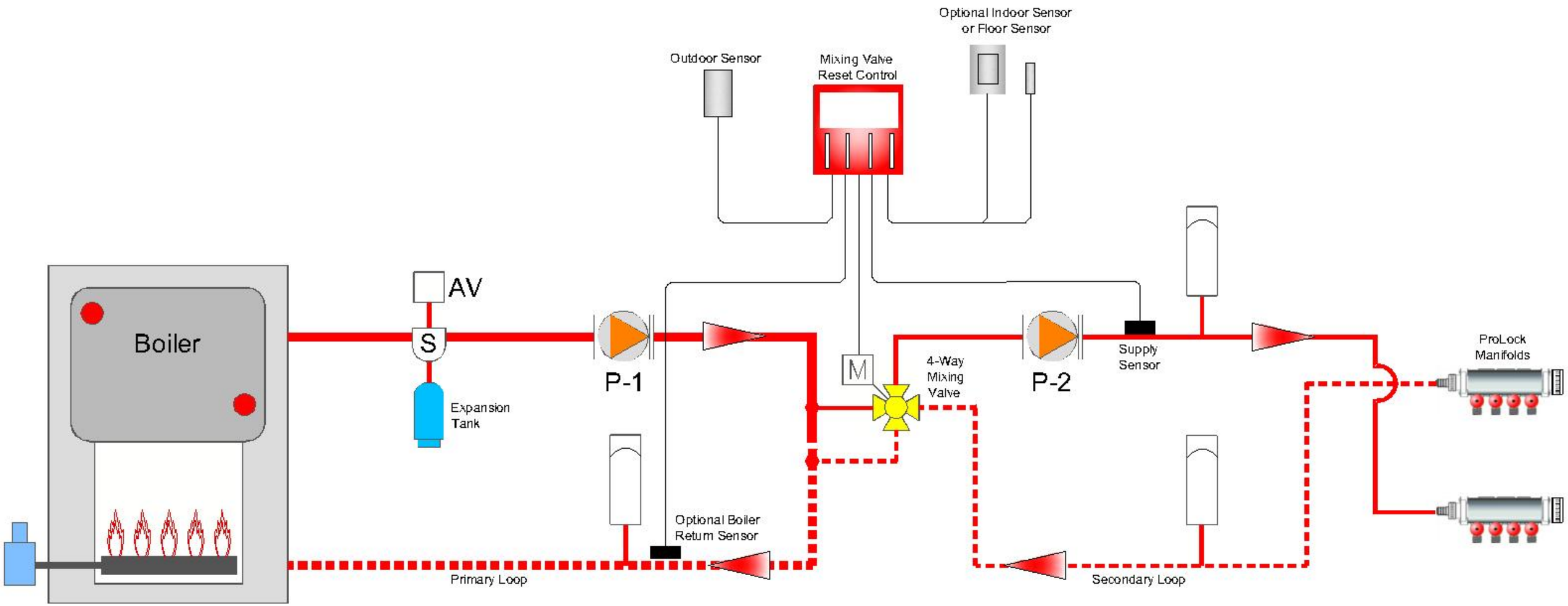
Optional Indoor Sensor
or Floor Sensor
Outdoor Sensor
Mixing Valve
Reset Control
AV
S
Boiler
Expansion
Tank
P-1
M
4-Way
Mixing
Valve
P-2
Supply
Sensor
ProLock
Manifolds
Optional Boiler
Return Sensor
Primary Loop
Secondary Loop