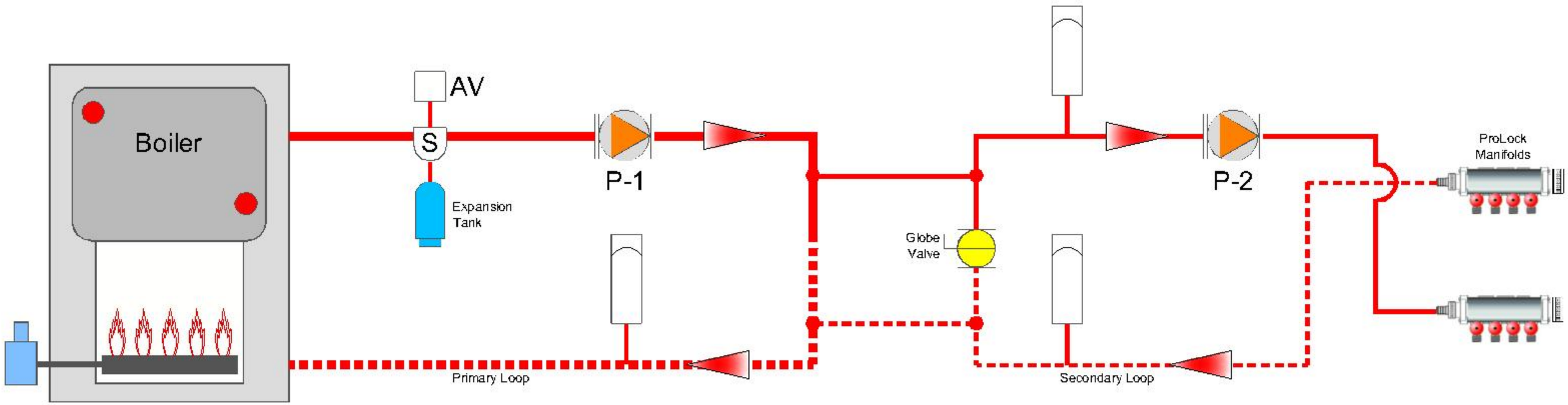
Boiler
AV
S
Expansion
Tank
P-1
P-2
Globe
Valve
ProLock
Manifolds
Primary Loop
Secondary Loop