quality . service
innovation . integrity

803/805/807 Residential Grinders

Features

Fractional HP Grinder Series. World's first integral automatic grinder. All cast iron grinder series for difficult residential applications where ejectors struggle. Handles entire household of "flushable" materials. 115 volt grinders for residential use without commercial grinder costs.

- 803, 1/2 HP - 805, 3/4 HP - 807, 1 HP
- Performance up to 55' (16.8 m)
- Oil filled for optimal heat dissipation
- Proven Tri-Slice® cutter technology - three independent cutting channels provide over 250,000 cuts per minute.
- Stainless steel cutter and plate
- Automatic and nonautomatic available
- 100% factory tested

Specifications

Motor Characteristics

Motor	1/2 - 1 HP
Voltage	115 V or 230 V
Phase	1 Ph
Hertz	60 Hz
RPM	3400 RPM
Type	Capacitor start/capacitor run
Insulation	Class B
Amps	7.0 - 11.0 Amps (115 V), 3.0 - 5.0 Amps (230 V)

Pump Characteristics

Operation	Automatic and nonautomatic
Auto On/ Off Points	13" (33 cm) / 5-3/4" (14.6 cm)
Discharge Size	1-1/4" NPT
Cord Length	15' (16.8 m)
Cord Type	UL-listed, 3-wire plug
Max Head	55' (16.8 m)
Cooling	Oil filled
Motor Protection	Automatic thermal overload (1 ph)

Materials Characteristics

Cap	Cast iron
Motor Housing	Cast iron
Pump Housing	Cast iron
Base	Cast iron
Upper Bearing	Ball bearing
Lower Bearing	Ball bearing
Mechanical Seals	Carbon and ceramic
Impeller Type	Non-clogging vortex
Impeller	Engineered plastic/440C stainless steel cutter & plate
Hardware	Stainless steel
Motor Shaft	1215 cold rolled steel
Gasket	Neoprene

60 Hz

ZOELLER® PUMP COMPANY
Zoeller Family of Water Solutions™

FM2908_Ea

Updated 0415
Supersedes New

803/805/807 Residential Grinders

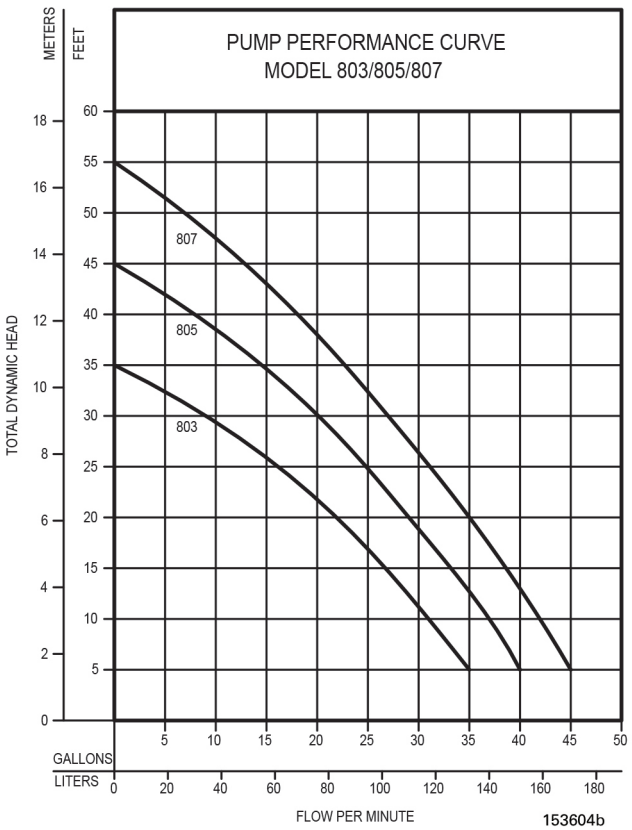

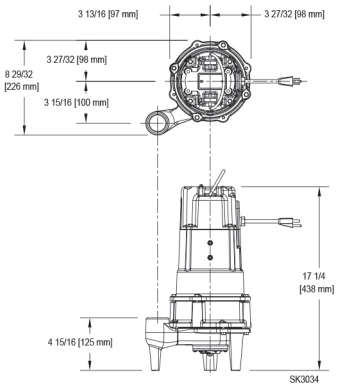

Automatic

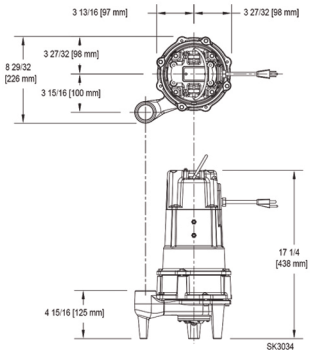

Nonautomatic

Model

Model Number	Seal	Mode	Volts	Phase	Amps	HP	Hz	Lbs	Kg
M803	Single	Auto	115	1	7.0	1/2	60	65	29
N803	Single	Nonauto	115	1	7.0	1/2	60	65	29
BN803	Single	Auto	115	1	7.0	1/2	60	65	29
D803	Single	Auto	230	1	3.0	1/2	60	65	29
E803	Single	Nonauto	230	1	3.0	1/2	60	65	29
BE803	Single	Auto	230	1	3.0	1/2	60	65	29
M805	Single	Auto	115	1	9.0	3/4	60	65	29
N805	Single	Nonauto	115	1	9.0	3/4	60	65	29
BN805	Single	Auto	115	1	9.0	3/4	60	65	29
D805	Single	Auto	230	1	4.0	3/4	60	65	29
E805	Single	Nonauto	230	1	4.0	3/4	60	65	29
BE805	Single	Auto	230	1	4.0	3/4	60	65	29
M807	Single	Auto	115	1	11.0	1	60	65	29
N807	Single	Nonauto	115	1	11.0	1	60	65	29
BN807	Single	Auto	115	1	11.0	1	60	65	29
D807	Single	Auto	230	1	5.0	1	60	65	29
E807	Single	Nonauto	230	1	5.0	1	60	65	29
BE807	Single	Auto	230	1	5.0	1	60	65	29

Your Peace of Mind is Our Top Priority®
3649 Cane Run Rd | Louisville, KY 40211 USA
+1 502-778-2731 | 1-800-928-7867 | Fax: +1 502-774-3624
www.zoeller.com

Product information presented here reflects conditions at time of publication. Consult factory regarding discrepancies or inconsistencies. Copyright Zoeller Company. All rights reserved.