Please carefully read and save these instructions before attempting to assemble, maintain, install, or operate this product. Observe all safety information to protect yourself and others. Failure to observe the instructions may result in property damage and/or personal injury. Please keep instructions for future reference.

Important Operating Instructions

North American Tool Industries

AUTO REWIND HOSE REEL

Model: 7640

CALIFORNIA PROPOSITION 65

WARNING: You can create dust when you cut, sand, drill or grind materials such as wood, paint, metal, concrete, cement, or other masonry. This dust often contains chemicals known to cause cancer, birth defects, or other reproductive harm. Wear protective gear.
WARNING: This product or its power cord may contain chemicals, including lead, known to the State of California to cause cancer and birth defects or other reproductive harm. Wash hands after handling.

Important!

When using equipment, a few safety precautions must be observed to avoid injuries and damage. Please read the complete operating manual with due care. Keep this manual in a safe place, so that the information is available at all times. If you give the equipment to any other person, give them these operating instructions as well. We accept no liability for damage or accidents which arise due to non-observance of these instructions and the safety information herein.

CAUTION:

FOR YOUR OWN SAFETY READ INSTRUCTION MANUAL COMPLETELY AND CAREFULLY BEFORE OPERATING. Failure to follow all instructions as listed below may result in electrical shock, fire, and/or serious personal injury.

SAFETY WARNINGS

1) Keep the work area clean, well lit and uncluttered.

2) Do not use this tool in damp or wet locations.

3) Do not use tools in the presence of flammable gases or liquids.

4) Store idle equipment in a dry and cool location.

5) Use the right tool for the job. Do not force a small tool or attachment to do the work of a larger industrial tool.

6) Do not modify this tool or use it for a purpose for which it was not intended.

7) Keep long hair pulled back and do not wear loose clothing or jewelry while operating this tool.

9) Check for damaged parts before use. Do not use the tool if it is damaged. Repair or replace parts before use.

For warranty purchases, please keep your dated proof of purchase. File or attach to the manual for safekeeping.

INSTALLATION

This reel may be installed on a wall, floor or ceiling (at least 10 feet above the floor).

1) Remove the bolts that attach the guide roller bracket to the support post in order to re position the bracket to the appropriate location. Reinstall the bolts and tighten.

2) Drill holes that can accommodate 1/2 inch bolts (not included). Ensure you are drilling into a solid backing or use the appropriate hardware to anchor the bolts.

3) Mount the reel and secure the four bolts (not included) through the 1/2 inch holes in the mounting bracket.

OPERATION

ADJUSTMENT OF SPRING TENSION

1) Pull out six feet of hose.

2) Remove the hose stopper from the hose and feed it back through the guide.

3) To increase tension, wrap the pulled hose one time around the drum.

4) To decrease the tension, unwrap the hose one time from the drum.

5) Run the hose back through the guide and reattach the hose stopper.

6) Unlatch the hose and check the tension. Adjust the stopper position if necessary.

USE

1) Check the wheel operation by slowly pulling the hose out. It should make a clicking noise.

2) To lock the hose, pull it out a minimum of one half turn and it will lock after up to 3 clicks.

3) To unlock, slowly pull until the clicking stops and allow the hose to retract until the stopper hits the hose guide.

4) Attach a coupler (not included) to your air compressor and apply Teflon tape to the outlet fitting on the reel. Connect the coupler (not included) to the outlet fitting.

5) Attach a coupler (not included) on the end of the of the hose and connect the air tool.

REPLACING THE HOSE

1) Pull out the old hose and securely lock the hose reel.

2) Disassemble the rubber bumper block by removing the bolts and the nuts.

3) Disconnect the old hose from the swivel joint and remove the hose.

4) Run the hose through the rubber bumper block and through the opening in the drum flange.

5) Use Teflon tape on the hose fitting threads and screw the fitting onto the swivel and tighten. Reassemble the rubber bumper block with the bolts and the nuts.

6) Attach the hose stopper on the end of the hose near the outlet fitting.

7) Carefully release the drum latch and allow the hose to wind onto the reel. Evenly distribute the hose across the reel.

MAINTENANCE

Keep the hose reel clean by wiping it with a dry cloth.

Check for frays and tears in the hose before and after use. Do not use if the hose is torn or frayed.

Do not use if the locking mechanism fails.

Limited Manufacturer Warranty

North American Tool Industries (NATI) makes every effort to ensure that this product meets high quality and durability standards. NATI warrants to the original retail consumer a 1-year limited warranty from the date the product was purchased at retail and each product is free from defects in materials. Warranty does not apply to defects due directly or indirectly to misuse, abuse, negligence or accidents, repairs or alterations, or a lack of maintenance. NATI shall in no event be liable for death, injuries to persons or property, or for incidental, special or consequential damages arising from the use of our products. To receive service under warranty, the original manufacturer part must be returned for examination by an authorized service center. Shipping and handling charges may apply. If a defect is found, NATI will either repair or replace the product at its discretion.

DO NOT RETURN TO STORE

For Customer Service:
Email: feedback@natitools.com or Call 1-800-348-5004

AUTO REWIND HOSE REEL

Model: 7640

Parts List

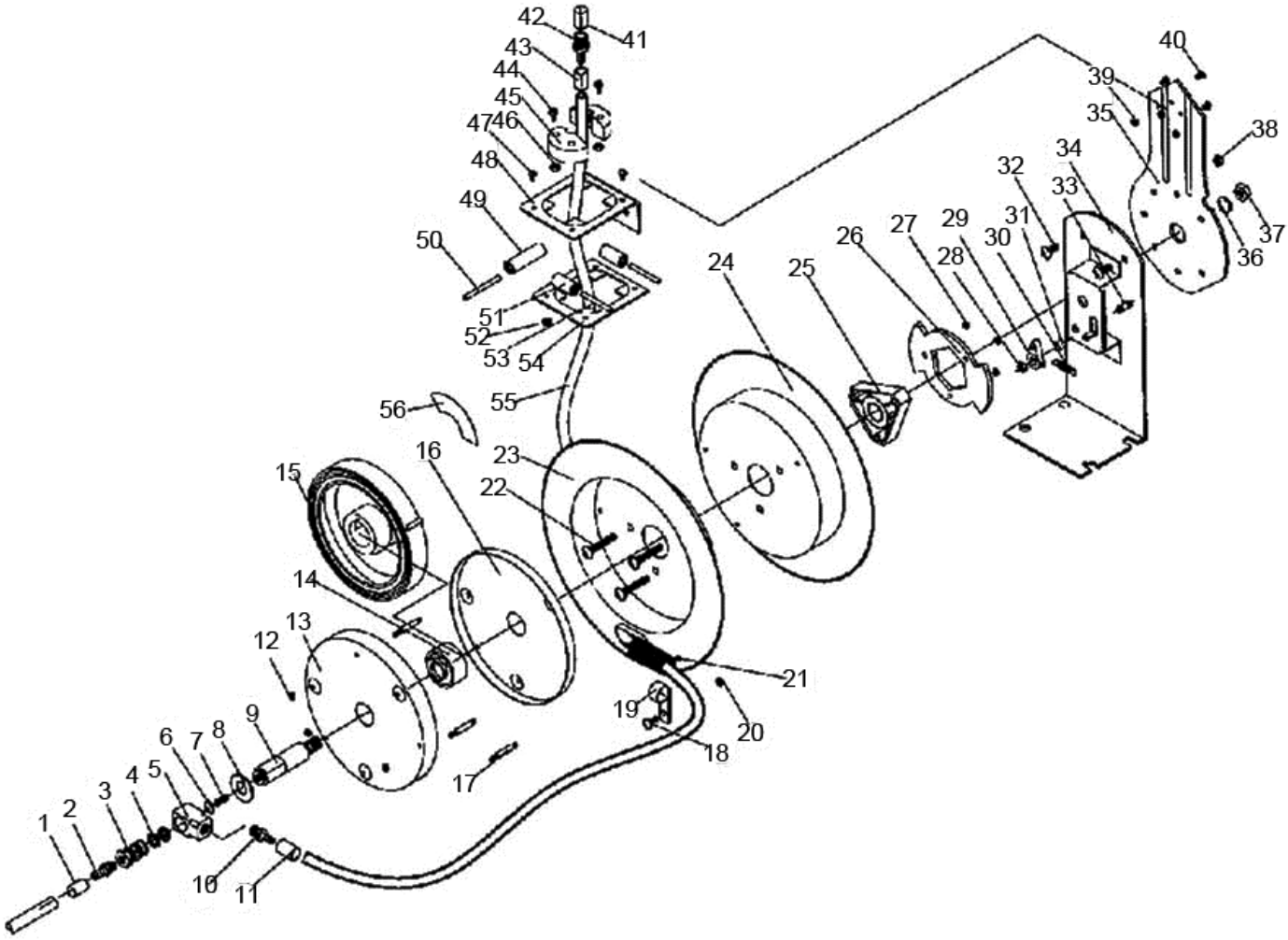

Call 1-800-348-5004 for assistance or replacement parts

Please provide the following information:

- *Model number*
- *Part description and number as shown in parts list*
- *Serial number (if any)*

Address any correspondence to:

North American Tool Industries
84 Commercial Rd
Huntington, IN 46750

#	Description	QTY
1	Copper Hose Fastener	1
2	Thread	1
3	Valve Core	1
4	O-Ring	2
5	Valve	1
6	Washer	1
7	Bolt	1
8	Washer	1
9	Axle	1
10	Thread	1
11	Copper Hose Fastener	1
12	Nut	1
13	Spring Cover	1
14	Spring Core	1
15	Spring	1
16	Spring Cover	1
17	Bolt	3
18	Bolt	2
19	Hose Fixity	1
20	Nut	6
21	Hose Spring Protector	1
22	Bolt	3
23	Drum	1
24	Drum	1
25	Hub Bearing Assembly	1
26	Ratchet Wheel	1
27	Nut	3
28	Locking Nut	1

#	Description	QTY
29	Locking Cam	1
30	Spring	1
31	Cover	2
32	Screw	4
33	Jam Nut	1
34	Base	1
35	Support Arm	1
36	Washer	1
37	Nut	1
38	Nut	4
39	Nut	3
40	Screw	3
41	Thread Rubber Cover	1
42	Thread	1
43	Copper Hose Fastener	1
44	Bolt	1
45	Hose Stopper	1
46	Nut	4
47	Screw	4
48	Guide Plate	1
49	Guide Roller (Long)	2
50	Guide Roller Axle (Long)	2
51	Guide Roller (Short)	2
52	Nut	4
53	Guide Roller Axle (Short)	2
54	Guide Sub-plate	2
55	Hose	1
56	Label	3