Form No.1-809 R4
May 2010

PARTS & INSTALLATION INSTRUCTIONS
MEYER MINI SPREADER
MATE

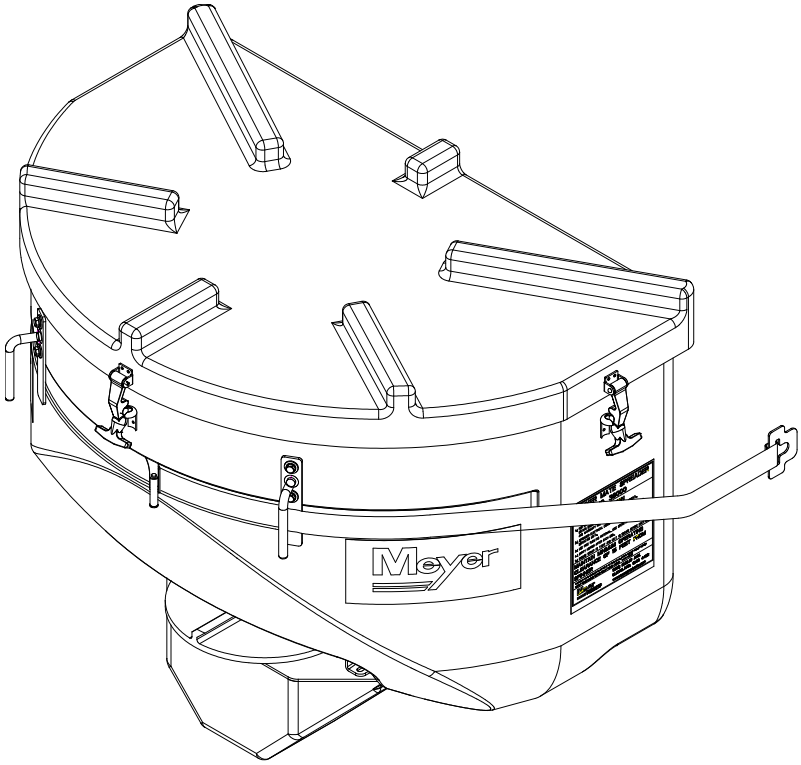

INDEX

INSTALLATION INSTRUCTIONS ..... PAGE 1
A. INSTALLATION OF HOPPER ..... PAGE 1-2
B. ELECTRICAL INSTALLATION ..... PAGE 3-4
C. OPERATION OF MATE ..... PAGE 1
D. MAINTENANCE INSTRUCTIONS ..... PAGE 1
WARRANTY STATEMENT ..... PAGE 4

Meyer Products assumes no responsibility for installations not made in accordance with these instructions.

Meyer Products reserves the right, under its continuing product improvement program, to change construction or design details, specifications and prices without notice or without incurring any obligation.

© 2010 Printed in the U.S.A.

Meyer PRODUCTS LLC
18513 Euclid Ave. • Cleveland, Ohio 44112-1084
Phone 486-1313 (Area Code 216)
email • warranty@meyerproducts.com

INSTALLATION INSTRUCTIONS

CAUTION: Always disconnect battery before beginning installation.

NOTE: For the best installation, we recommend that the vehicle be equipped with a step bumper. If not available, modifications to rear of vehicle frame such as adding a trailer hitch may be required so as to provide a lower support for the Spreader. **Relocate license plate holder and lights if blocked by any part of the Spreader.** During installation where the spreader may touch metal, a gasket should be used to help prevent any possible paint damage to the vehicle.

A. Installation of hopper

1. Open the cover plate (12) on the rear of the hopper by removing 1/4-20 x 3/8 Bolts (27) and flatwashers (26). Plug one end of the 20' vibrator cord (3a) into the vibrator. Snake the other end through the 1" hole on the bottom of the hopper (1). Reattach the rear cover plate (12).

2. Loosen both 3/8-16 x 7/8 Bolts (19), so as the Post-to-Bumper (4) is free to slide along the bottom of the hopper (1) in the direction of the slots.

Note: The post to bumper (4) is reversible to fit a wide range of vehicles.

3. Open the vehicle tailgate. Place the bracket of the strapping section with the ratchet (37D) over the striker pin on the driver's side of the tailgate opening. Place the bracket of the remaining strap (37A) over the opposite striker pin on the passenger side. Securely close the tailgate, taking care to make sure both brackets are positioned between the truck wall and the side of the tailgate. Vehicles with latch type tailgates must use Latch Kit 38043 (38) reference SB 196.

Note: if the vehicles step bumper currently has a ball hitch mounted in the 3/4" center hole, it will need to be removed before proceeding.

4. Place the hopper (1) onto the bumper of the vehicle, while inserting the Post-to-Bumper (4) through the ball hitch hole in the step bumper. **Note:** If Post (4) interferes with vehicle receiver hitch, the bumper post (4) may be trimmed to avoid contact with the hitch. While holding the hopper on the bumper, bring both strap ends around the front of the hopper, making sure both straps are run underneath the handle – strap guide (10). Insert the free end of the passenger side strap (A) into the ratchet and through the slot in the shaft. Pull enough of the strap through the slot so the ratchet makes contact with the hopper. Place the excess strap over itself, and operate the handle of the strap, snugly tightening the unit up against the tailgate.

5. Tighten the 3/8-16 x 7/8 Bolts (19) to the specified torque. Insert the lynch pin through a convenient hole in the post (4), below the bumper.

6. Securely tighten the ratchet, **making sure the strap has not become twisted**. The hopper should now be held securely on the bumper, up tight against the face of the tailgate. There should be no movement of the hopper.

Caution: The ratchet should be tightened before each use. The strap should be inspected for tears before each use. If strap is torn or damaged it must be replaced!

Note: To remove the spreader, pull the tab (B) sideways, located on front mid section of the ratchet. While holding the tab (B) in the unlocked position pull the lever handle fully open. While supporting the spreader, push the release tab (C) to release tension, remove strap.

B. ELECTRICAL INSTALLATION. Refer to Page 3.

C. Operation of Mate

Due to the rate at which materials absorb moisture differently, some materials may not perform as desired. Therefore, the substitution of an alternate material may be necessary for optimum performance of the spreader.

1. Adjust the flow control (31) of the auger assembly (28) to the appropriate height for the material being spread.

2. Fill Hopper with the desired free flowing material (#1 Rock Salt, Calcium Chloride, Sand or Seed)

When spreading sand the vibrator must be turned on. The vibrator may also be helpful when spreading other free flowing materials.

CAUTION: When filling hopper, make certain there are no large objects contained in the material, which could cause the auger to bind and stop operation of the spreader motor. If this should happen, the circuit breaker becomes overloaded and will automatically break the circuit. Allow the motor to cool and clear the auger before pushing the reset button.

Note: Material should never be left in the hopper for extended periods of time when the spreader is idle. Clogging may occur.

D. Maintenance Instructions:

Maintenance requirements for the spreader during the winter season are relatively simple. Periodically inspect for loose bolts and nuts. Inspect for improper ground, broken wires, frayed or cracked wire insulation. Inspect strap for tears. Replace as necessary. To keep maintenance to a minimum, the following cautions are suggested:

1. Do not attempt to clear auger or spinner or to perform any other maintenance or repair work on this spreader unless the ignition switch is in the "OFF" position.

2. Spreading material must be loose and free from lumps and foreign objects.

3. Empty hopper after each use and hose the spreader off.

4. When the spreader is no longer being used remove it from the tailgate. Remove any rust and corrosion from the metal parts, them prime the paint. It is recommended to detach the harness (40) to prevent activation when not required. Store spreader in a suitable location and attach dummy plug to socket to protect from corrosion. Apply lubricant to the sprockets of the ratchet.

PARTS LIST

Item	Part No.	Qty.	Description
	38000	1	**MATE SPREADER COMPLETE**
	38080	1	• **Spreader Assembly**
1	38083	1	•• Double Wall Hopper
	38050	1	•• Mate Vibrator Kit
2	38070	1	••• Vibrator
3 *	38051	1	••• 20’ Vibrator Wire
3A	38056	1	••• 36” Vibrator Wire Extension
*	38052	1	••• Vibrator Parts Bag
4	38006	1	•• Post To Bumper
5	38091	1	•• Top Cover With Latches
6	36543	3	•• Latch Keeper
7	38003	1	•• Motor Plate
8	36402	1	•• Motor
9	38081	1	•• Motor Shroud
10	38046	2	•• Handle And Srap Guide
11	38001	1	•• Spinner Band
12	38008	1	•• Cover Plate
13	22387	1	•• 38000 Safety Decal
14	20029	4	•• Bolt H 5/16-18 x 1-1/2" Gr.2
15	20352	4	•• Washer 5/16
16	20313	4	•• Locknut 5/16-18
17	22230	11	•• 3/8 Flatwasher
18	22379	10	•• 3/8 Lockwasher
19	22383	7	•• Bolt H 3/8-16 x 7/8”
20	22381	2	•• 1/2 Flatwasher
21	21380	2	•• 1/2 Lockwasher
22	22386	2	•• Bolt 1/2-13 x 1-1/4”
23	22384	4	•• Bolt H 3/8-16 x 1-3/4”
24	22382	4	•• 3/8-16 Hex Nut
25	36241	1	•• Plug Assembly Motor
26	22248	2	•• 1/4” Flatwasher
27	22393	2	•• Machine Screw1/4-20 x 3/8”
28	38040	1	•• **Spinner - Auger Assembly**
29	38035	1	••• Auger Weldment
30	36152	1	••• Spinner Hub Weldment
31	38037	1	••• Flow Control
32	38002	1	••• Spinner Plate (Poly)
33	20006	3	••• Bolt H 1/4-20 x 1-1/4" Gr. 2
34	20303	3	••• Locknut 1/4 Esna
35	21834	1	••• Set Screw 3/8-24 x 3/8”
36*	22399	1	••• Wire Lynch Pin 1/4 x 1-3/4”
37*	38044	1	• **Strap Assembly**
38	38043	1	• **Latch Kit - Optional**
39	22800	1	• Speed Control Assembly
40	34106	1	• Harness

FIGURE 1

During installation where the spreader may touch metal, a gasket should be used to help prevent any possible paint damage to the vehicle.

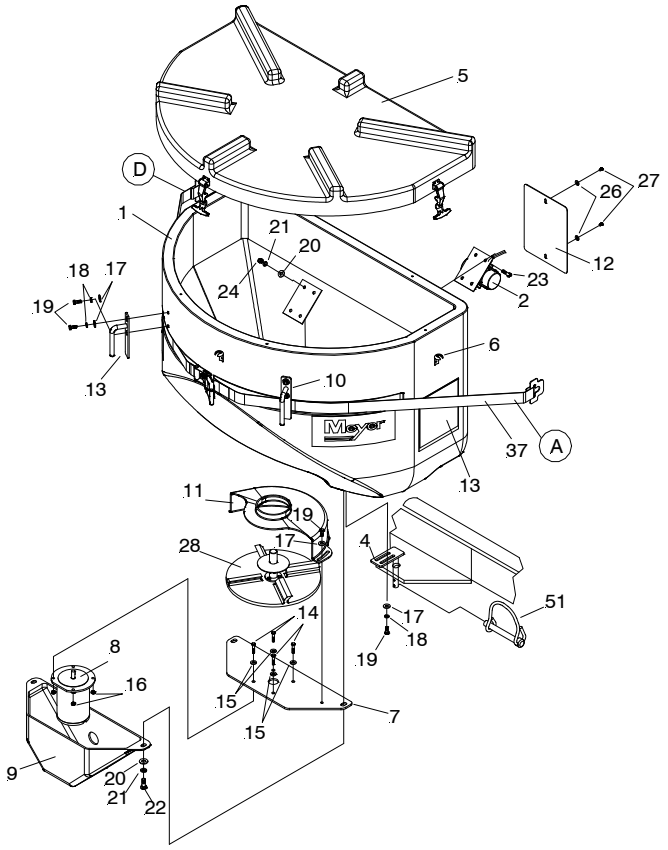

Make certain that the mounting strap is not against anything sharp with tailgate closed.
SEE SB 196

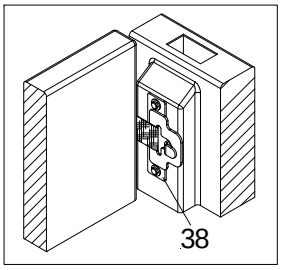

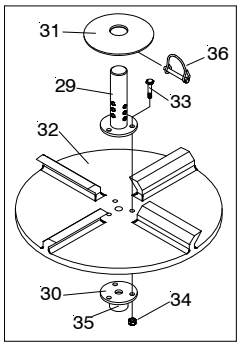

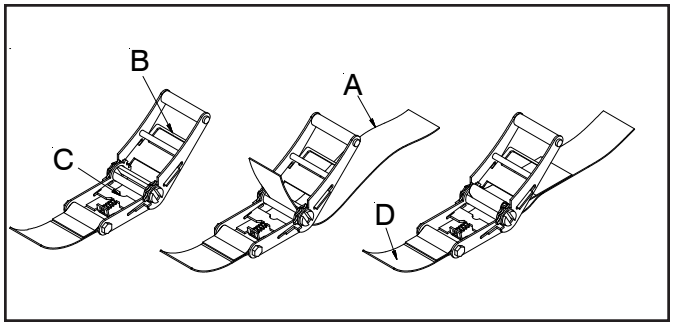

Items No. 1 through 36 are pre-assembled and shown in the exploded view for parts identification only.

* Items are packed in 38009 Misc. Parts Carton

Parts indented are included in the carton, bag or assembly under which they are indented.Check contents against the parts list to determine all are correct and included, and also to familiarize yourself with them.

B. ELECTRICAL INSTALLATION. Refer to Figure 2.

If routing wires underbody to the rear of the chassis, it is recommended to route the wire to the inside of vehicle frame rail. Secure the wires to the frame or OEM harness with appropriate strapping or fasteners.

CAUTION: Some vehicles are designed to operate with exhaust temperatures as high as 1800° F. This can easily damage any wires which are routed too closely or allowed to come in contact with any portion of the exhaust system. Be certain all wires are securely installed away from the exhaust system.

1.) Locate the wire harness and begin to route it from the rear of the vehicle to the front. The molded rubber plug indicates the rear of the harness, closest to the spreader. Use frame holes and frame supports as lashing points. Do not attach to fuel or brake lines. Avoid wire-runs along exhaust system or hot engine parts. Melting damage to the harness can occur in the proximity of extreme heat.

2.) Mount the rubber plug under the rear bumper. Position this plug toward the center of the vehicle.

3.) Place the Harness portion that connects to the battery along the firewall and fender well, but do not connect yet.

4.) Drill a 1" diameter hole through the firewall. This hole will be used to route the controller portion of the harness into the vehicle. Before drilling always check to see what is on the other side.

5.) Push the controller portion of harness through the hole in the firewall that was previously drilled. NOTE: The controller end will have 2 plugs on it, but only 1 plug can pass through the firewall at a time.

6.) Move to engine compartment. Connect power leads to battery: RED WIRE (+) positive, BLACK WIRE (-) negative. Coat the connections with dielectric grease to prevent corrosion and build up. Check harness marked 'battery' for voltage by temporarily removing the red tape affixed to it.

7.) Connect the blue wire from pigtail to brake light. Connect white wire from pigtail to optional vibrator harness if equipped. Connect red wire on pigtail to a 12 volt keyed accessory. Connect black ground wire to ground. Connect white jumper wire to the back of the controller marked motor white wire. Connect red jumper wire to the back of the controller marked battery red wire wire. The two red wires from the main connector can now be connected to the two jumper wires. (Note: wires will only connect one way) ANY ATTEMPT TO JOIN THE CONNECTORS IMPROPERLY, FOR EXAMPLE MALE TO MALE, COULD SHORT OUT THE CONTROLLER.
Misconnection resulting in a damaged controller is not covered by warranty.

8.) Select a suitable location to mount the controller. After mounting verify that the power switch is in the off position.

9.) Coil excess wire and use wire ties to secure it to a safe location.

10.) Mate the plug coming from the spreader unit to the plug previously installed under the rear bumper.

11.) Make sure that feed screw/spinner area of the spreader is clear of obstructions. Turn power on at the controller and verify that the spreader is operating in all modes. Looking down on the impeller from the rear of the vehicle, determine that the impeller is turning counter-clockwise. Unit may now be operated.

Failure to follow these precautions could cause the red (output) wire from the Speed Control to make contact with ground, causing the transistor to burn up. Any grounding or shorting of the red (output) wire which results in a burned transistor is not covered by warranty.

CAUTION

READ THIS ! . . Serious damage to Speed Control will result if the following precautions are not followed:

1. Do not install Speed Control until all other wiring is installed and Motor is test-run.

2. Be certain to connect red wire to (+) terminal of Motor. Connecting to (-) terminal will burn up Speed Control Tape this (+) connection so it cannot accidentally be grounded.

3. After wires are in place, but before connecting Speed Control, connect a jumper wire from the red wire #48 to the red wire #46. The motor should run, indicating proper grounding and wire installation. Remove jumper wire.

4. After the Motor has successfully been test run, the Speed Control can be installed. Do not allow the red wire from the control to accidentally contact any grounded object, including the control case itself.

ELECTRICAL INSTALLATION
SPEED CONTROLLER 22800
with VIBRATOR

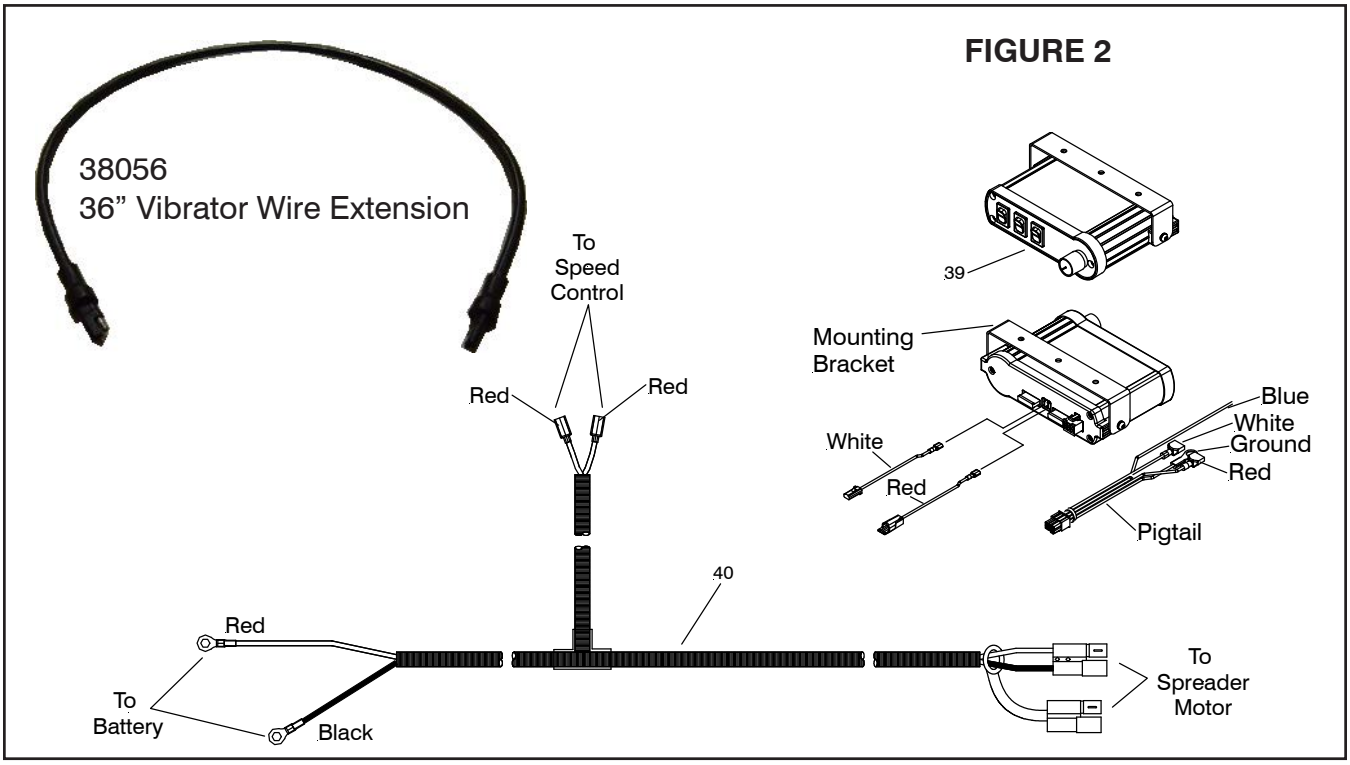

ONE YEAR WARRANTY

ONE YEAR WARRANTY

Meyer Products and Diamond Equipment promises to the consumer to repair, or at our option to replace any part of this Meyer Spreader, accessory (other than noted below) except expendable parts such as pins, Spreader fins,and other normal wear items, which proves to be defective in workmanship or material under normal use for a period of one year from the date of delivery to the original purchaser. During this one year, Meyer Products and Diamond Equipment will provide, through its Distributor / Sub-Distributor network, all labor or parts necessary to correct such defects free of charge. Faulty parts will be repaired or replaced by the Distributor / Sub-Distributor where that particular piece of equipment was purchased. Any cost incurred in returning the product to the Distributor / Sub-Distributor is the responsibility of the consumer.

EXCLUSIONS

IN NO EVENT SHALL MEYER PRODUCTS OR DIAMOND EQUIPMENT BE LIABLE FOR SPECIAL, INCIDENTAL OR CONSEQUENTIAL DAMAGES OR FOR DAMAGES RESULTING FROM LACK OF NECESSARY MAINTENANCE, FROM MISUSE, ABUSE, ACTS OF GOD, ALTERATION OF ANY PRODUCT, OR FROM USE OF PARTS OR HYDRAULIC FLUID NOT SUPPLIED BY MEYER PRODUCTS OR DIAMOND EQUIPMENT. USE OF THE MEYER SPREADER FOR ANY PURPOSE OTHER THAN SPREADING MATERIALS AS INTENDED BY MEYER PRODUCTS AND DIAMOND EQUIPMENT, IS ONE EXAMPLE OF AN ABUSE AND MISUSE OF THE PRODUCT.

WARRANTY SERVICE

In order to obtain service under this warranty, the consumer must return this product to the Distributor / Sub-Distributor from whom the product was purchased or to any authorized Meyer Products or Diamond Equipment Distributor / Sub-Distributor, transportation and freight charges prepaid. Only Meyer Products or Diamond Equipment Distributors / Sub-Distributors are authorized to perform the obligations under these warranties. For the address and telephone number of the Distributor / Sub-Distributor nearest you, check the telephone directory or you may write to the warrantor at the address below.

GENERAL

It is the responsibility of the consumer to establish the warranty period by verifying the original delivery date. A bill of sale, canceled check or some other appropriate payment record may be kept for that purpose. For this warranty to be effective, the consumer must complete and return the attached Warranty Registration Card immediately upon reciept of this Meyer Products Equipment. No person is authorized to change this warranty or to create any warranty other than that set forth herein. This warranty gives you specific legal rights and you may also have other rights which vary from state to state. **Logon to www.meyerproducts.com to register for your warranty**

EC DECLARATION OF CONFORMITY

The undersigned representing the manufacturer

---

and the authorized representative established within the community

---

---

herewith declared that the Product: **Snow & Ice Equipment**

Model/Type ref.:

---

is in conformity with the Essential requirements of the following EC Directives when subject to correct installation, maintenance and use conforming to its(their)intended purpose, to the applicable regulations and standards, to our operation and maintenance manual.

2006/95/EC	*EC Low Voltage Directive*
2004/108/EC	*EMC Directive*
2006/42/EC	*Machinery Directive*

and that the Standards and/or technical specifications referenced below have been applied:

- χ BS EN 60204-1:2006 / IEC 60204-1:2005: Safety of machinery – Electrical equipment of machines-Part 1: General requirements.
- χ EN ISO 12100-1:2003:Safety of Machinery – Basic Concepts, General Principles of Design Part 1: Basic Terminology and Methodology
- χ EN ISO 12100-2:2003:Safety of Machinery – Basic Concepts, General Principles of Design Part 2: Technical principles
- χ EN 13021:2003+A1- Winter service machines - Safety requirements
- χ EN 61000-6-2: 2005. Generic standards – Immunity for Industrial Environments.
- χ EN 61000-6-4:2005. Generic emission standard, Part 2: Industrial environment.

Year of CE Marking:

Manufacturer:

Signature---
Position--- ENGINEERING MANAGER
Date--- 5-14-2010
Place--- CLEVELAND, OHIO

Authorized Representative in the community:

Signature ---
Position---
Date---
Place---

Meyer SNOW PLOWS

PARTS & INSTALLATION INSTRUCTIONS
MEYER MINI SPREADER
MATE

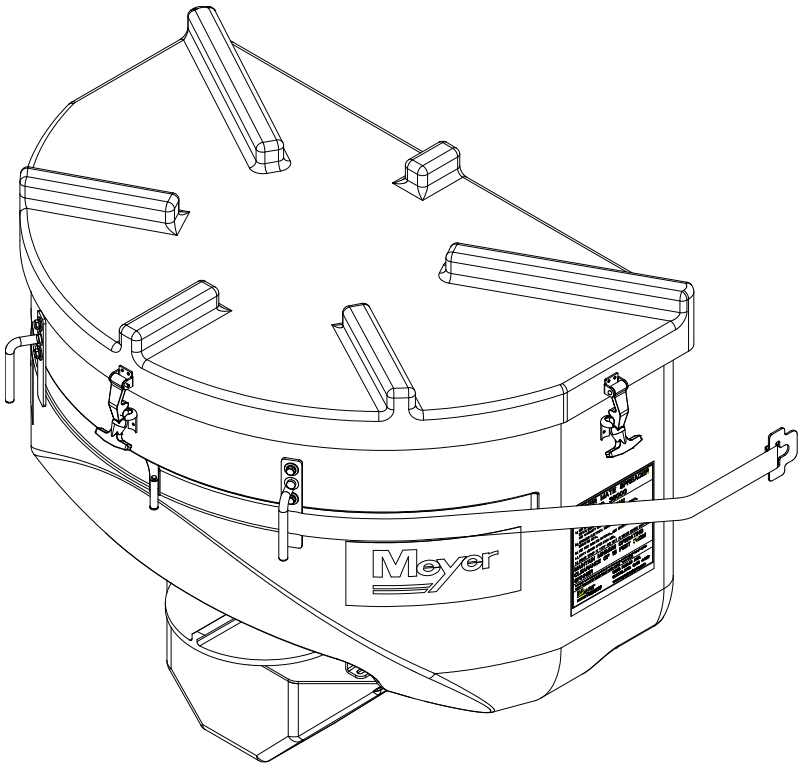

© 2010 Printed in the U.S.A.

Meyer PRODUCTS LLC

18513 Euclid Ave. • Cleveland, Ohio 44112-1084
Phone 486-1313 (Area Code 216)
email • warranty@meyerproducts.com