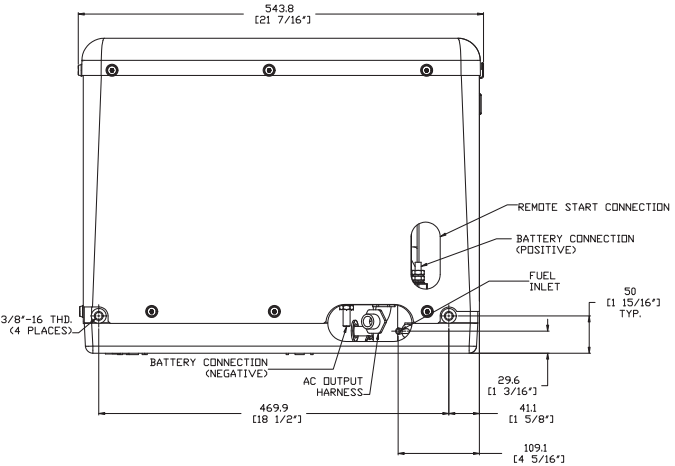
543.8
[21 7/16"]
REMOTE START CONNECTION
BATTERY CONNECTION
(POSITIVE)
FUEL
INLET
50
[1 15/16"]
TYP.
3/8"-16 THD.
(4 PLACES)
BATTERY CONNECTION
(NEGATIVE)
AC OUTPUT
HARNESS
29.6
[1 3/16"]
469.9
[18 1/2"]
41.1
[1 5/8"]
109.1
[4 5/16"]

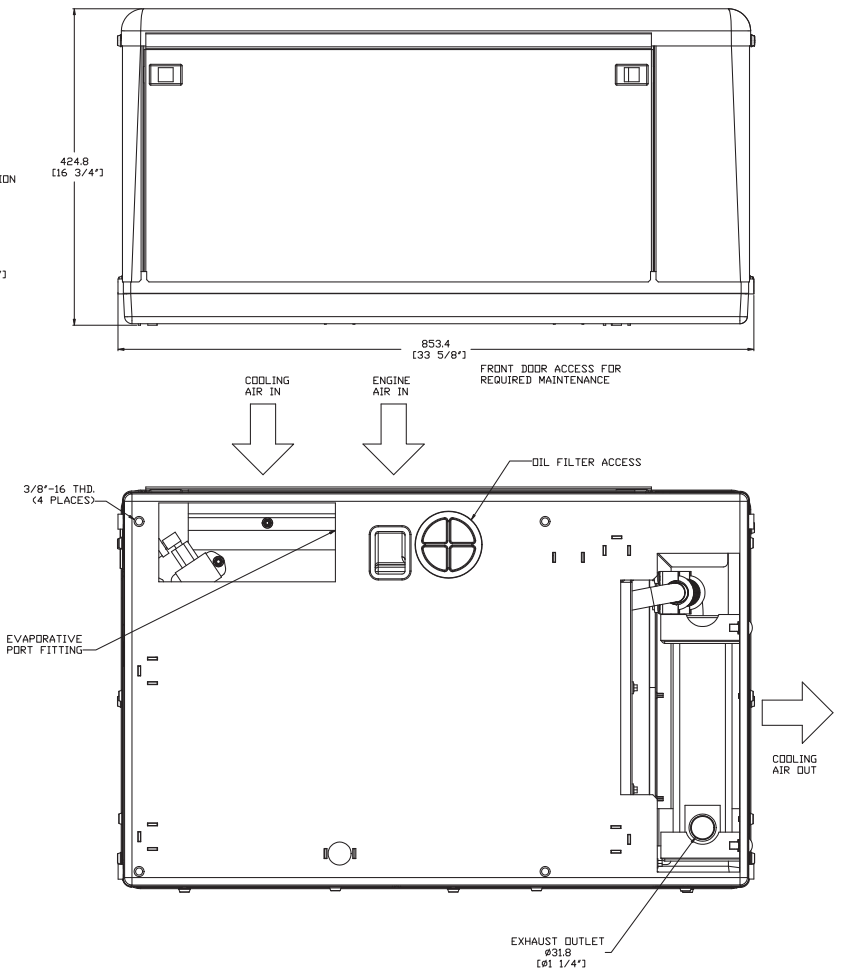
424.8
[16 3/4"]
853.4
[33 5/8"]
FRONT DOOR ACCESS FOR
REQUIRED MAINTENANCE
COOLING
AIR IN
ENGINE
AIR IN
OIL FILTER ACCESS
3/8"-16 THD.
(4 PLACES)
EVAPORATIVE
PORT FITTING
COOLING
AIR OUT
EXHAUST OUTLET
ø31.8
[ø1 1/4"]