GasLess™ Leaf Blower

CBP 420

Instruction Manual

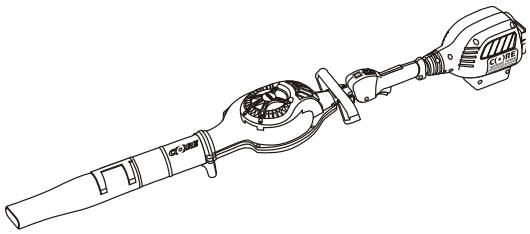

PRODUCT SPECIFICATIONS	
Power Cell:	20.5 Volt high energy Li-Ion
Chargers:	1 hour Rapid charger or 3 hour Standard Charger
Charger input:	120 V AC, 60 Hz
Charger output:	24 V DC
Replacement Power Cell:	CFC 6500
Replacement chargers:	CRC 6500 or CSC 6500 S
Weight: (with Power Cell)	11 Lbs
Weight: (without Power Cell)	7 Lbs 12 Oz

Need Assistance?

Call us on our toll free customer support line:
1-855-831-CORE (2673)

- Technical questions
- Warranty or aftermarket service, or replacement parts
- Parts missing from package

CORE™ Outdoor Power, 36235 Kerr Dam Rd., Polson, Montana USA 59860

TABLE OF CONTENTS

Product specifications ……. 1
Table of contents ……. 2
General safety warnings …… 3–4
Eye and facial, hearing & body protection ……. 3–4
Electrical safety ……. 4
Product safety notices – Owner's registration ……. 4
General power tool safety warnings …… 5–7
Work area safety ……. 5
Electrical safety ……. 5
Personal safety ……. 6
Power tool use and care ……. 6
Service …….. 7
Specific safety rules ……. 7–10
Power Cell and charger safety instructions …….. 10–13
Power cell recycling …… 13
Symbols …… 14
Know your leaf blower …… 15
Available accessories ……. 15
Contents ……. 16
Assembly and operating ……. 17–21
Charging the Power Cell …… 17
Installing the nozzle …… 17
Speed control switch …….. 17-18
Motor control switches ……. 18
Installing the Power Cell ……. 19-20
Operating position …….. 20
Cleaning the air intake ……. 21
Maintenance ……. 22
Replacement parts …….. 23
Warranty …….. 24–28
Warranty service …… 29–32
Factory service request form ……. 33–34

GENERAL SAFETY WARNINGS

CAUTION: Before using this tool or any of its accessories, read this manual and follow all Safety Rules and Operating Instructions.

This instruction manual includes the following:

- **General Safety Rules**
- **Specific Safety Rules and Symbols**
- **Functional Description**
- **Assembly**
- **Operation**
- **Maintenance**
- **Accessories**

WARNING: Retain this manual for future reference.
Provide this manual to all operators and be certain that they have read and understand all the Safety Rules and Operating Instructions prior to their using this tool.

EYE AND FACIAL PROTECTION

ALWAYS WEAR EYE PROTECTION THAT CONFORMS WITH THE MOST RECENT ANSI Z87.1 or CAN/CSA – Z94.3 SAFETY STANDARDS.

FLYING DEBRIS can cause permanent eye damage. Prescription eyeglasses ARE NOT a replacement for proper eye protection. The usage of a safety standard compliant face shield placed over proper safety glasses or goggles can reduce the risk of facial injury.

WARNING: Non-compliant eyewear can cause serious injury if broken during the operation of a power tool.

HEARING PROTECTION

WARNING: Use hearing protection if the surrounding environment of the area of operation is loud.

GENERAL SAFETY WARNINGS

BODY PROTECTION

l

l.

ELECTRICAL SAFETY

WARNING: To avoid electrical hazards, fire hazards or damage to the tool, use proper circuit protection.

The charger for this tool is wired at the factory for 120 V operation. It must be connected to a 120 V, 15 A circuit that is protected by a time-delayed fuse or circuit breaker. To avoid shock or fire, replace the power cord immediately if it is worn, cut or damaged in any way.

PRODUCT SAFETY NOTICES – OWNER'S REGISTRATION

nit

t

SAVE THESE INSTRUCTIONS FOR FUTURE REFERENCE

GENERAL POWER TOOL SAFETY WARNINGS

GENERAL POWER TOOL SAFETY WARNINGS

⚠ **WARNING: Read all safety warnings and all instructions.** *Failure to follow the warnings and instructions may result in electric shock, fire and/or serious injury.*

Save all warnings and instructions for future reference.

General Power Tool Safety Warnings – Work Area Safety

Keep work area clean and well lit. *Cluttered or dark areas invite accidents.*

Do not operate power tools in explosive atmospheres, such as in the presence of flammable liquids, gases or dust. *Power tools create sparks which may ignite the liquids, fumes or dust.*

Keep children and bystanders away while operating a power tool. *Distractions can cause you to lose control.*

General Power Tool Safety Warnings – Electrical Safety

Power charger plugs must match the outlet. Never modify the plug in any way. Do not use any adapter plugs with earthed (grounded) chargers. *Unmodified plugs and matching outlets will reduce risk of electric shock.*

Avoid body contact with earthed or grounded surfaces such as pipes, radiators, ranges and refrigerators. *There is an increased risk of electrical shock if your body is earthed or grounded.*

Do not expose power tools, power chargers or Power Cells to rain or wet conditions. *Water entering the tool, chargers or Power Cells will increase the risk of electric shock.*

Do not abuse the cord. Never use the power cord for carrying, pulling or unplugging the charger. Keep the power cord away from heat, oil, sharp edges, and moving parts. *Damaged or entangled cords increase the risk of electric shock.*

When operating a power charger outdoors, use an extension cord suitable for outdoor use. *Use of a cord suitable for outdoor use reduces the risk of electric shock.*

If operating a power charger in a damp location is unavoidable, use a residual current device (RCD) protected supply. An RCD is also known as a ground fault circuit interrupter (GFCI) or earth leakage circuit breaker (ELCB). *Use of an RCD reduces the risk of electric shock.*

General Power Tool Safety Warnings – Personal Safety

Stay alert, be aware of your surroundings, watch what you are doing and use common sense when operating a power tool. Do not use a power tool while you are tired or under the influence of drugs, alcohol, or medication. *A moment of inattention while operating a power tool may result in serious personal injury.*

General Power Tool Safety Warnings – Personal Safety – cont'd

Use personal protective equipment. Always wear eye protection. *Protective equipment such as dust mask, non-skid safety shoes or boots, sturdy gloves, durable long pants and durable long sleeve shirt, [and hard hat, or hearing protection used for appropriate conditions] will reduce personal injuries.*

Prevent unintentional starting. Ensure the trigger switches are in the off-position before connecting the Power Cell to the power tool, and never pick up or carry the tool by the trigger switches. *Carrying power tools with your finger on the switch or energizing power tools that have the switch on invites accidents.*

Remove any adjustment key or wrench before turning the power tool on. *A wrench or a key left attached to a rotating part of the power tool may result in personal injury.*

Do not overreach. Keep proper footing and balance at all times. *This enables better control of the power tool in unexpected situations.*

Dress properly. Do not wear loose clothing or jewelry. Keep your hair, clothing and gloves away from moving parts. *Loose clothing, jewelry or long hair can be caught in moving parts.*

General Power Tool Safety Warnings – Power tool use and care

Do not force the tool. Use the correct tool for the application. *The correct power tool will do the job better and safer when used at the rate for which it was designed.*

Do not use a power tool if the switch does not turn it on or off. *Any power tool that cannot be controlled using the switch is dangerous and must be repaired.*

Remove the Power Cell before making any adjustments, replacing or repairing parts, cleaning the tool, leaving the tool idle or unattended, transporting or storing the tool. *Such preventive safety measures reduce the risk of starting the power tool accidentally.*

Store idle power tools out of the reach of children and do not allow persons unfamiliar with the power tool or these instructions to operate the power tool. *Power tools are dangerous in the hands of untrained users.*

Maintain power tools. Check for misalignment or binding of moving parts, breakage of parts and any other condition that may affect the power tool's operation. If damaged, have the power tool repaired before use. *Many accidents are caused by poorly maintained power tools.*

Use the power tool and accessories in accordance with these instructions, taking into account the working conditions and the work to be performed. *Use of the power tool for operations different from those intended could result in a hazardous situation.*

GENERAL POWER TOOL SAFETY WARNINGS

General Power Tool Safety Warnings – Service

Have your power tool or charger serviced by a qualified repair person using only identical replacement parts. *This will ensure that the safety of the power tool or charger is maintained.*

SPECIFIC SAFETY RULES

WARNING: Know your leaf blower. Do not plug in the charger or install the Power Cell into the tool until you have read and understand this Instruction Manual. Learn the tool's applications and limitations, as well as the general and specific potential hazards related to this tool. *Following these instructions will reduce the risk of electric shock, fire or serious injury.*

WARNING: Always wear appropriate eye protection. Any power tool can throw foreign objects into your eyes and cause permanent eye damage. ALWAYS wear appropriate safety goggles or properly fitted safety glasses that comply with OSHA standards and the most recent version of ANSI Z87.1 or CAN/CSA – Z94.3 safety standards [or other applicable national standard]. Ordinary vision or sun glasses generally do not provide adequate impact or side shield / wrap around penetration protection. Ordinary glasses ARE NOT safety glasses. To reduce the risk of injury to your face CORE™ Outdoor Power recommends that you also wear a face shield or face screen over your safety goggles or safety glasses.

WARNING: Glasses, goggles or face shields not in compliance with ANSI Z87.1 or CAN/CSA – Z94.3 could cause serious injury if they break upon impact.

WARNING: Prevent foot injuries! Never operate when barefoot, or wearing open toed shoes, or sandals. Always, wear sturdy protective shoes or boots with non-slip soles when operating the leaf blower. Steel-toed safety boots are recommended.

WARNING: Protect your hands by wearing heavy-duty, non-slip gloves and to improve your grip and control when handling the blower.

WARNING: Clothing must be durable and snug-fitting, yet allow for freedom of movement.

WARNING: Avoid loose clothing such as scarves, neckties, jewelry, flared or cuffed pants, loose-fitting shirts or jackets, unconfined long hair or anything that can be pulled into the air intake of the blower. Secure hair to above shoulder level. Wear long pants of durable material to protect your legs.

Cover as much of your body as possible to help protect you from debris and pieces of toxic and allergenic plants being thrown by the blower.

WARNING: Use hearing protection. Core recommends the use of hearing protection (e.g. ear plugs or ear mufflers) to protect your hearing, particularly if the blower is used for extensive periods or if the surrounding environment of operation exposes the operator to loud noises. When wearing hearing protection, you will have impaired ability to hear alarms, warnings and shouts from approaching people or approaching vehicles. Be extra diligent and observant of hazards and bystanders when wearing hearing protection devices. When someone approaches, turn the blower OFF immediately.

WARNING: The high velocity of the air flow coming through the nozzle will throw objects and debris violently and the objects and debris will ricochet in all directions. **You or bystanders can be blinded or injured.** Keep children, bystanders, pets and other animals at least 50 feet (15 meters) away from the operating blower. Turn the blower OFF immediately if approached, or if you are approaching such bystanders. Bystanders should be encouraged to wear eye protection, even if they are kept at a distance.

Thrown objects may also ricochet and strike the operator or bystander.

Utilize extra caution, when the blower is being used near, or on paved or hard surfaces, as pieces of metal, concrete, brick, stones, gravel, sand, glass, sticks and other objects can be thrown at high speed and force and such objects can be thrown, skip along or ricochet long distances off of hard surfaces.

Do not use this blower for sweeping debris that may contain hard objects, e.g. pebbles, stones, sticks, glass, metal, etc. as such hard objects can be thrown with great force and cause injury to the operator or bystanders, and / or damage property, e.g., screens, windows, building siding, glass doors, or vehicles.

NOTICE: Avoid operating the blower near property that can be easily damaged by thrown or ricocheting objects such as screens, windows, building siding, glass doors and vehicles.

WARNING: Always wear breathing protection when operating the blower. Bystanders should be encouraged to wear breathing protection devices even if they are kept at a distance as hazardous dust can travel considerable distances, especially if the dust is wind blown.

WARNING: Know what you are going to blow, before you blow.

WARNING: Inspect the area to be cleared for hazards before each use. Remove any foreign objects such as sticks, rocks, broken glass, nails, wire, tools, toys, etc. which can be thrown by the blower.

WARNING: If you are suspicious or uncertain if the material that you are considering blowing would cause hazardous dusts, first, identify and investigate the nature of the materials.

SPECIFIC SAFETY RULES

If the materials have the potential to be hazardous, do not use the blower, instead, utilize other safe clean up procedures and disposal procedures. If you are suspicious that you have been blowing or come into contact with asbestos, or crystalline silica materials or hazardous chemical or biological materials, contact your doctor, your employer if your use of the blower is job related, and the local EPA or OSHA representative immediately. Clean up and dispose of hazardous chemicals and substances prior to using the blower, using appropriate clean up procedures, personal protective equipment and disposal methods.

⚠ **WARNING: Dust created by use of this product may contain chemicals known to the State of California and medical experts to cause cancer, respiratory injuries, birth defects or other reproductive harm. Some examples of these chemicals are:**

- Compounds in fertilizers
- Compounds in insecticides, herbicides and pesticides
- Arsenic and chromium from chemically treated lumber.
- Commercial and household chemicals.

To reduce your exposure to these chemicals, wear approved safety equipment such as dust and / or vapor masks that are specifically designed to filter out microscopic particles or gaseous components. Additionally, dust created by this product may contain allergens, bacteria and viruses, PM 10 and / or PM 2.5 particulates, exposure to such hazardous airborne matter can be reduced by wearing approved safety equipment such as dust masks that are specifically designed to filter out the microscopic particles.

⚠ **WARNING:** Breathing asbestos or dust with silica in its composition may contain hazardous crystalline silica. Silica is a fundamental component of sand, quartz, brick, clays, granite and many other materials and rocks, including masonry, concrete and cement products. Such crystalline silica dust is dangerous and must be avoided, as it can cause severe or fatal respiratory illness or cancer.

⚠ **WARNING:** Avoid blowing near open windows or doors, or anywhere near bystanders or animals as doing such may cause exposure to the potentially hazardous dust, particularly down-wind of your blowing operation due to the respiratory hazard reasons stated above.

Do not work against the wind as the dust will blow back towards the operator increasing the exposure to the dust.

Keep the blower below waist level and point the blower nozzle below waist level.

⚠ **WARNING:** Check the blower fan screen before each use to make sure the air intake screen and the fan are on good condition. If any damage is identified, replace the part immediately before using the blower. A damaged fan may shatter and a damaged air intake screen will allow your fingers to be injured by the fan.

⚠ **WARNING:** Never operate the blower without the nozzle and the intake fan screen in place. Serious injury or damage to the blower may result.

SPECIFIC SAFETY RULES

⚠ **WARNING:** Never insert a foreign object (e.g. screwdriver, stick, etc.) into the nozzle, air exhaust tube or the intake fan screen. Any foreign article that becomes lodged in the air system may be ejected at great speed causing serious injury when the blower is turned ON. It may also severely damage the blower fan.

⚠ **WARNING: Always remove the Power Cell when making adjustments, changing the nozzle, removing debris from the blower screen, leaving the tool idle or unattended, cleaning, servicing, storing or transporting the tool.** *Such preventive measures reduce the risk of starting the tool accidentally and causing serious injury.*

⚠ **WARNING:** Never modify the blower in any way. It is designed to be used only with the nozzle and power cell that are supplied with the tool. The use of any other accessory or modifying the tool may create a safety hazard. This action will also void the warranty.

Never use the blower without the nozzle properly installed. This will allow you to direct the air flow where you want it and make the tool more efficient.

Always keep the handles clean. Handles that are covered with grease, chemicals or debris will make holding onto the blower difficult. Use a clean cloth dampened with soapy water to clean these surfaces.

Never use a pressure washer, garden hose or any other liquid or chemical solvents to clean the blower.

⚠ **WARNING:** When blowing very dusty materials in extremely dry conditions for long periods of time, static electricity may build up and discharge without warning. To avoid this situation in dry dusty conditions, only operate the blower for short periods of time and turning the blower OFF at regular intervals.

Maintain firm footing and balance at all times. Do not overreach or use the blower from unstable surfaces such as ladders, trees, steep slopes, slippery surfaces, rooftops, etc.

Always grasp the blower using the handles on the machine.

Use only in daylight or in good quality artificial light.

Never use the blower for anything other than its intended purpose. Use for anything other than blowing leaves, grass, weeds or lawn debris can be dangerous. It may also damage the blower.

Never walk backwards while the blower is turned ON as you might trip and may not hear approaching persons or vehicles.

POWER CELL & CHARGER SAFETY INSTRUCTIONS

NOTE:
Detailed instructions are packed with the Power Cell and Charger.

⚠ WARNING: Only use a CORE™ Outdoor Power CSC 6500-S standard charger or a CRC 6500 rapid charger to charge the CORE™ Outdoor Power CFC – 6500 Power Cell. Using any other chargers to charge the CFC-6500 Power Cell may damage the Power Cell and / or the charger and cause fires, explosion, hazardous fumes and possibly burns or other serious injury.

⚠ WARNING: Fire Hazard.

Never expose the Power Cell to microwaves or high pressures. It may explode causing serious injury.

Never attempt to open, modify, dismantle, reverse polarity, crush, puncture or shred the Power Cell for any reason.

Do not store or carry the Power Cell in a manner in which metal objects could contact the exposed metal terminals. Do not place the Power Cell in aprons, pockets, drawers, tool boxes, etc. with metal objects, such as, but not limited to, loose nails, screws, bolts, keys, coins, staples, foil, etc. Such metal objects could cause the Power Cell to short circuit causing fire, explosion, and hazardous fumes, resulting in personal injury or property damage.

If the housing of the Power Cell breaks, cracks, swells, or is punctured immediately discontinue its use and do not recharge.

Do not charge or use the Power Cell if it has been dropped or has received a sharp blow, a heavy weight has been imposed upon it, has been overheated, or is cracked, crushed, deformed or punctured. If a Power Cell has sustained damaged, (as per above, or otherwise) immediately isolate it in a non-combustible, safe outside area, remain a safe distance away but do not leave it unattended. Such a damaged Power Cell should be considered and treated as a potentially thermally unstable, flammable and hazardous material. If the Power Cell ignites use water spray, carbon dioxide, dry chemical or foam extinguishers to suppress. Avoid exposure to and inhalation of hazardous fumes. Contact hazardous materials authorities for guidance as to appropriate handling and prompt safe disposal of damaged Power Cells. Make arrangements for prompt safe disposal of a damaged Power Cell per local hazardous material regulations.

Do not use or charge the Power Cell if it is wet or shows any evidence of corrosion.

POWER CELL & CHARGER SAFETY INSTRUCTIONS

⚠ **WARNING:** Leakage from the Power Cell may occur under extreme usage, charging or temperature conditions, or if the Power Cell is damaged, crushed or punctured. This leakage indicates a failure of the Power Cell and the Power Cell should be properly disposed of per local hazardous material regulations.
If this leakage gets on your skin, or eyes follow these steps:

1. Wash skin immediately and thoroughly with soap and water.
2. If liquid gets into your eyes, flush immediately with clean water for a minimum of 20 minutes and seek immediate medical attention.

If the liquid gets onto your clothing or shoes, remove, isolate and wash the contaminated clothing thoroughly.

Do not wash, splash or immerse a Power Cell in water or other liquids.

Keep the Power Cell out of the reach of children and away from persons not fully familiar with these instructions.

Do not expose the Power Cell to heat or fire. Do not incinerate the Power Cell. It can explode and emit hazardous fumes.

Do not store or use the Power Cell in locations where the temperature may reach or exceed 105°F (40°C) such as in outside sheds or metal buildings, tool boxes, vehicle interiors or trunks during summer. Avoid storing the Power Cell in direct sunlight.

For air, vessel and ground transport purposes, Lithium ion Power Cells are classified as Class 9 Hazardous Goods, subject to ICAO Technical Instructions and IATA Dangerous Goods Regulations and US Department of Transportation and Transport Canada Hazardous Material Regulations [HMR] [and other applicable national regulations]. Such Power Cells are restricted from being placed in checked in baggage and are subject to shipper declarations, standards, quantity and packaging regulations. Confirm with the ground, vessel, air cargo or passenger air travel service provider as to the most current regulations to determine if your lithium ion Power Cells are prohibited, or subject to restrictions or exemptions prior to shipping or travel with your lithium Power Cells.

Do not remove the Power Cell from its original packaging until it is required for use.

Always keep the Power Cell clean and dry. Wipe the terminals with a clean dry cloth if they become dirty.

Do not use an extension cord. Plug the charger cord directly into an electrical outlet.

Storage Recommendations:

The best storage place for Power Cells is a secure and safe place that is cool and dry and away from direct sunlight and excess heat or cold. *Exposure to excess or prolonged heat will degrade the performance and the life expectancy of the Power Cell.*

POWER CELL & CHARGER SAFETY INSTRUCTIONS

Use the charger only in a standard 120 V AC, 60 Hz electrical outlet.

⚠ **WARNING:** Do not use the charger in wet or damp conditions. The charger is intended for indoor use only. Do not use outdoors. Do not expose to dew, rain or garden sprinklers, frost, or snow. Do not use the charger near sinks or tubs. Do not immerse the charger in water. *Water entering the chargers or Power Cells will increase the risk of electric shock.*

Do not operate power chargers in explosive atmospheres, such as in the presence of flammable liquids, gases or dust. *Power chargers can create sparks which may ignite the liquids, fumes or dust.*

Do not use the CORE™ Outdoor Power CSC 6500-S standard charger or a CRC 6500 rapid charger to charge any batteries other than a CORE™ Outdoor Power CFC 6500 Power Cell. Charging other batteries may cause the batteries to burst, catch fire, emit hazardous fumes or explode.

Do not allow the charger cord to hang over the edge of a table or counter, to be placed in an area where it can become entangled with moving objects, or be a tripping hazard, or to contact sharp or hot surfaces. The charger should be placed away from sinks and hot surfaces.

Do not leave a Power Cell on a prolonged charge. Remove the Power Cell after attaining a complete recharge and unplug the charger when not in further use.

Do not operate the charger if the cord or plug is damaged. Have a qualified technician replace the damaged cord and plug immediately.

Do not operate the charger if it has received a sharp blow, been dropped, crushed, cracked, punctured, immersed or splashed with water or other liquids, or otherwise damaged in any way. Have a qualified technician examine the charger and repair it if necessary. Do not disassemble or modify the charger.

⚠ **WARNING:** When the charger is plugged into the power supply, it can become shorted by foreign conductive material and cause sparks or fires. Foreign conductive material such as, but not limited to, metal shavings / chips, steel wool, aluminum foil, nails, staples, paper clips, should be kept away from charger ventilation openings, Power Cell retaining cavity and output terminals.

Do NOT charge the Power Cell when the work area or the Power Cell temperature is at or below 0° C (32° F) or above 45° C (113° F).

Unplug the charger when it is not in use and before cleaning or maintenance.

NOTE: See Page 22 for detailed information concerning preparation for recycling power cells.

POWER CELL RECYCLING

To preserve our natural resources, and reduce landfill please recycle your Power Cells at participating retailers, or dispose of Power Cells properly in accordance with Federal, State, Provincial or local laws.

SYMBOLS

WARNING: Some of the following symbols may appear on the Leaf Blower, Power Cell or Power Cell chargers, or this manual. Study these symbols and learn their meaning. Proper interpretation of these symbols will allow for more efficient and safer operation of this tool.

V	Volts
A	Amperes
Hz	Hertz
W	Watts
H	Hours
⎓	Direct current
∿	Alternating or direct current
	Warning symbol
	Shock hazard
	Striking hazard
	Blower hazard
Keep bystanders back at least 50' (15m)	

	Read the manual
	Wear safety glasses
	Wear safety goggles
	Wear full-face shield
	Wear hearing protection
	Wear breathing protection
	Wear safety gloves
	Wear safety boots
	Wear snug fitting clothing

KNOW YOUR LEAF BLOWER

Power head

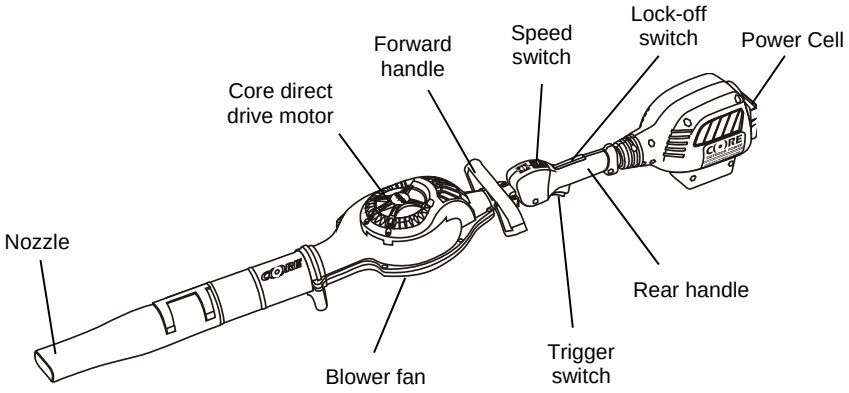

ACCESSORIES

AVAILABLE ACCESSORIES

⚠ **WARNING: Use only accessories that are recommended for this gasless leaf blower. Follow the instructions that accompany the accessories. The use of improper accessories may result in injury to the operator or damage to the gasless leaf blower.**

Before using any accessory, carefully read the instructions or the owner's manual for the accessory.

- See chart below

⚠ **WARNING:** If any part is missing or damaged, do not plug the charger into the power source or install the Power Cell in the tool until the missing or damaged part is replaced.

Part #	Description
CFC 6500	Power Cell
CRC 6500	1 hour rapid charger
CSC 6500 S	3 hour standard charger

CONTENTS

CONTENTS

Carefully unpack the leaf blower and compare the contents against the "LEAF BLOWER COMPONENTS" chart at right.

LEAF BLOWER COMPONENTS		
KEY	**DESCRIPTION**	**QTY**
A	Leaf blower	1
Depending upon if a Leaf Blower kit was purchased, one or more Power Cells and/or one of the following chargers may be included:		
B	Power Cell	1
C	1 hour rapid charger	1
D	3 hour standard charger	1
	Owner's Manual	1

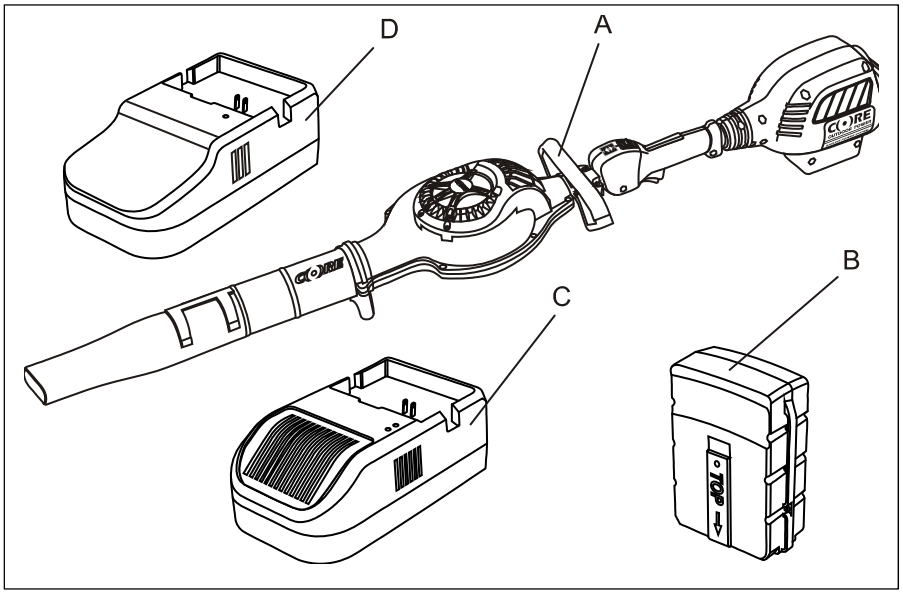

CHARGING THE POWER CELL

Instructions for charging the Power Cell are packed with the charger. Please read all safety warnings and charging instructions.

INSTALLING THE NOZZLE

The nozzle must be attached to the blower air tube to maximize the air flow and to allow you to direct the air flow.

1. Slide the slots (1) in the nozzle (2) over the matching keys (3) on the air tube (4) (Fig. 1).

2. Push the nozzle fully onto the air tube until the locking keys on the air tube align with the locking slots (5) in the nozzle.

3. Rotate the nozzle counter clockwise to lock the nozzle onto the air tube.

NOTE: When the nozzle is fully locked onto the air tube, the rectangular opening in the nozzle will be parallel to the ground.

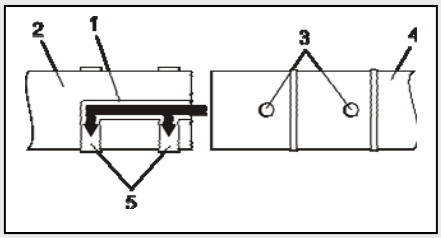

Fig. 1

SPEED CONTROL SWITCH

The blower motor speed can be set to run at either "HI" or "LOW" speeds.

1. To set the speed to "HI", slide the speed switch (1) forward (Fig 2).

2. To set the speed to "LOW", slide the speed switch backward.

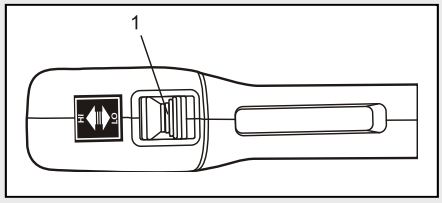

Fig. 2

SPEED CONTROL SWITCH – cont'd

NOTE: When blowing lighter materials such as small leaves, set the speed switch to "LOW". The lower speed will allow the Power Cell to provide longer running time. When blowing heavier materials such as large leaves or wet grass, set the speed switch to "HI". The higher speed will produce increased air flow for moving the heavier materials. It will also shorten the running time of the Power Cell before it requires recharging.

⚠ **WARNING:** Increased air flow when running the blower at high speed will cause debris to be violently thrown.

MOTOR CONTROL SWITCHES

To start the tool, squeeze the palm lock-off switch (2) into the rear handle (3) (Fig. 3). While squeezing the palm lock-off switch, squeeze the ON/OFF trigger switch (4). To turn the tool OFF, release the ON/OFF trigger switch (4).

NOTE: If the ON/OFF trigger switch (4) is released without also releasing the palm lock-off switch (2), to reactivate the tool requires only squeezing the ON/OFF trigger switch (4). If both the ON/OFF trigger switch and the palm lock-off switch are released you must repeat the above procedure to restart the tool.

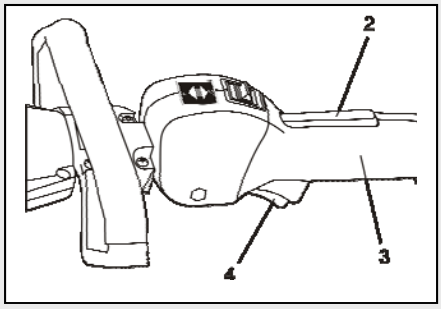

Fig. 3

⚠ WARNING

For safety reasons, the operator must read the sections of this Owner's Manual entitled "GENERAL SAFETY WARNINGS", "GENERAL POWER TOOL SAFETY WARNINGS", "SPECIFIC SAFETY RULES", "POWER CELL & CHARGER SAFETY INSTRUCTIONS" and "SYMBOLS" before using this leaf blower.

Verify the following every time the leaf blower is used:

1. **Safety glasses or goggles, hearing protection device, hearing protection and all required safety clothing are being worn.**
2. **The area of operation is cleared of all dangerous debris such as broken glass and free of materials that could derive hazardous dust.**
3. **Bystanders are at least 50' (15 m) away from the operation area.**

Failure to observe these safety rules will significantly increase the risk of injury.

INSTALLING THE POWER CELL

Once the Power Cell has been fully charged and you are ready to start blowing, you will have to install the Power Cell into the leaf blower the Power Cell (1) with the "TOP" label (2) facing upward
(Fig. 4).

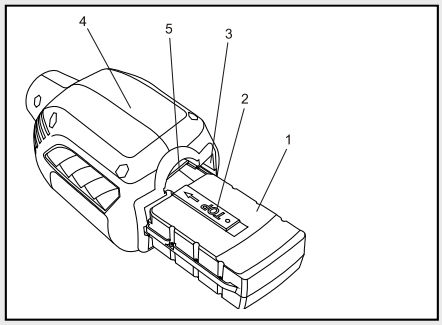

Fig. 4

INSTALLING THE POWER CELL – cont'd

1. Slide the Power Cell into the matching cavity (3) in the rear of the upper cowling (4).

NOTE: Make sure you push the Power Cell fully into the cavity. The locking latch (5) will click when the Power Cell is properly installed.

2. Pull outward on the Power Cell to verify that it is being held in place by the locking latch.

To remove the Power Cell for recharging or storage, press the locking latch toward the Power Cell. While holding the locking latch toward the Power Cell, pull the Power Cell out of the tool.

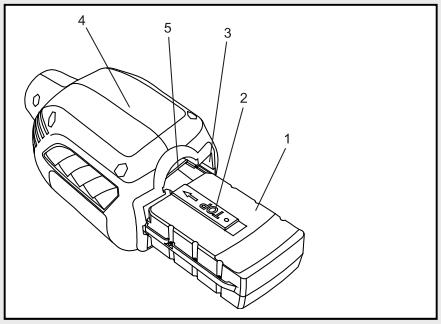

Fig. 4

OPERATING POSITION

This blower is designed to be used with both hands. Control over the blower will be easier when holding it with one hand on the forward handle and the other hand on the rear handle to operate the switches (Fig. 5). The blower is well balanced and can be used by holding it with only one hand on the rear handle with the same hand controlling the switches (Fig. 6).

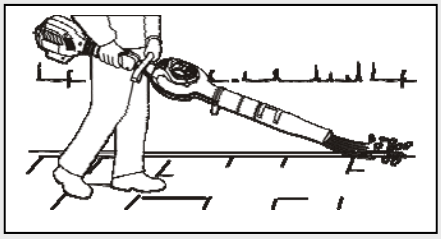

Fig. 5

⚠ **WARNING:** Always wear appropriate personal protective equipment.

Operate the blower below your waist height at all times. The most effective position for blowing is to hold the blower at an angle of less than 45° to the ground and with the nozzle close to the ground. Using a side to side sweeping motion will make clearing large areas easier.

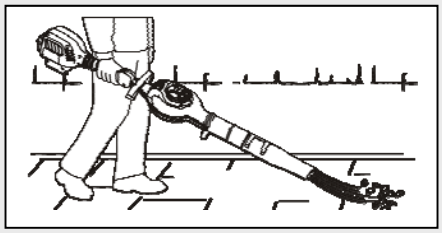

Fig. 6

CLEANING THE AIR INTAKE

It is important to provide unrestricted air flow into the blower fan. Check the air intake screen often to make sure it is clean and not restricting the incoming air.

⚠ **WARNING:** Remove the Power Cell from the blower before cleaning debris from the bower intake screen.

1. Turn to blower up-side down (Fig. 7).

2. Carefully brush any debris off the air intake screen (1).

NOTES:

a) Use a soft dry brush or a dry rag to remove the debris.
b) NEVER use water or any other liquid as you will damage the motor and/or the screen.
c) NEVER insert a screwdriver or other small tool into the blower screen. You may break the screen or the blower fan.

3. When all the debris is removed from the screen, turn the blower right side up and shake out any loose debris that may have fallen through the screen into the blower fan.

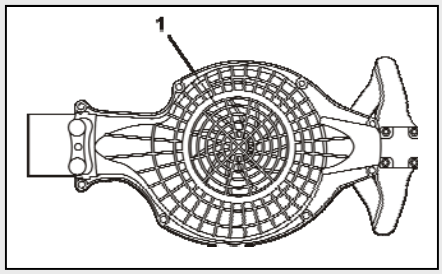

Fig. 7

MAINTENANCE

GENERAL

⚠ **WARNING: When servicing, use only original equipment replacement parts. The use of any other parts may create a hazard or cause product damage.**

⚠ **WARNING: DO NOT use solvents for cleaning the leaf blower, the chargers or the Power Cells. Solvents could catch fire or even explode due to exposure to electric sparks and / or degrade and make unsafe the electrical components.** Additionally, plastics are susceptible to damage from various types of commercial solvents and may be damaged by their use. Use a clean cloth to remove dirt, dust, oil, grease etc.

⚠ **WARNING: Do not allow brake fluids, gasoline, petroleum-based products, penetrating oils, etc. to come into contact with plastic parts. They contain chemicals that can damage, weaken or destroy plastic.**

DO NOT abuse power tools. Abusive practices can damage the tool.

⚠ **WARNING: DO NOT attempt to modify tools or create accessories. Any such alteration or modification is misuse and could result in a hazardous condition leading to possible serious injury. It will also void the warranty.**

LUBRICATION

All of the bearings in this tool are lubricated with a sufficient amount of high-grade lubricant for the life of the unit under normal conditions. Therefore, no further lubrication is required.

POWER CELL REMOVAL AND PREPARATION FOR RECYCLING

To preserve our natural resources, please recycle or dispose of Power Cells properly.

Consult your local waste authority for information regarding available recycling and disposal options.

⚠ **WARNING:** Upon removal of the Power Cell for recycling, cover the terminals of the Power Cell with electrical tape or heavy-duty adhesive tape. Never touch both terminals with metal objects or body parts, because a short circuit may result. Keep away from children. Do not attempt to destroy or disassemble the Power Cell or remove any of its components. Rechargeable Power Cells must be recycled or disposed of properly. Failure to comply with these warnings could result in fire and serious injury.

LITHIUM-ION POWER CELL MAINTENANCE

Lithium-ion Power Cells share many characteristics with Nickel-Cadmium batteries. The major characteristic that is **NOT** shared with Nickel-Cadmium batteries is that Lithium-ion Power Cells do not have a "memory" and do not require to be completely discharged periodically. It is recommended that you charge your Lithium-ion Power Cell after each use so they will be fully charged when needed.

NOTE: A fully charged Power Cell will loose about 2% of its charge per month during storage.

REPLACEMENT PARTS

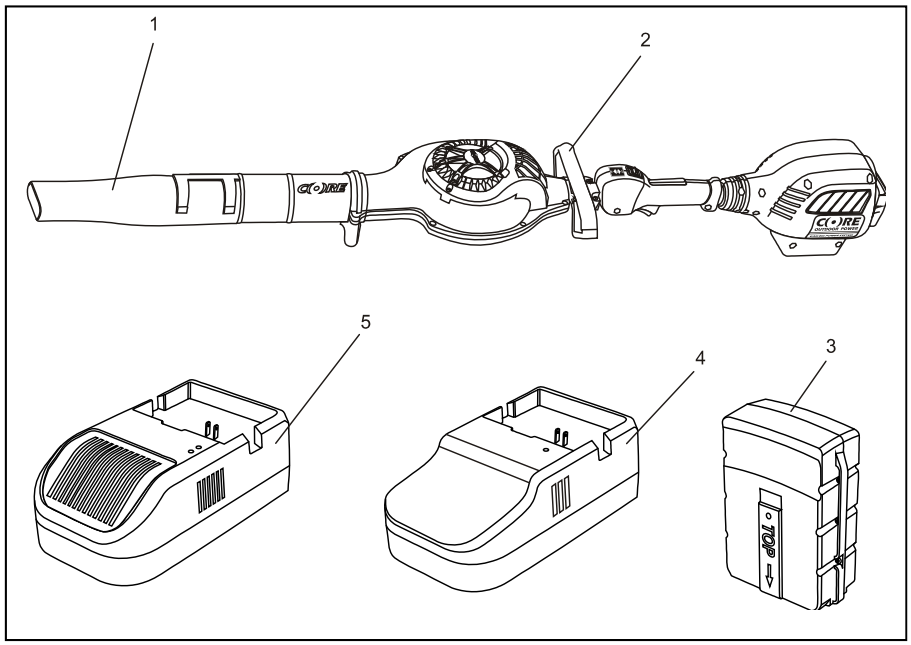

WARNING: When servicing, use only original equipment replacement parts. The use of any other parts may create a safety hazard or cause damage to the Leaf Blower.

Any attempt to repair or replace electrical parts on this Leaf Blower may create a safety hazard unless repairs are performed by a qualified technician. For more information, call the Toll-free Helpline, at 1-855-831-CORE (2673).

Always order by PART NUMBER, not by key number.

Key #	Part #	Part Name	Quantity
1	CBP 420-ST	Nozzle	1
2	CGT 400-AHA	Assist handle assembly (includes hardware)	1
3	CFC 6500	Power cell	1
4	CSC 6500-S	Standard charger	1
5	CRC 6500	Rapid charger	1
Not shown	CBP 420 Label Kit	Warning & instructive label kit	1

WARRANTY

CORE™ Outdoor Power - Limited Product Warranty Statement for CBP 420 Core GasLess™ Blower and Accessories Sold Only in the 48 Contiguous United States of America and Canada, effective September 18, 2012.

Page 1 of 5

CORE™ Outdoor Power provides to the original purchaser [for first purchaser other than for purposes of resale] or the person to whom it was originally purchased as a gift, a limited product warranty that CORE™ Outdoor Power Blower and accessories free from defects in material and workmanship under normal application, use and service conditions. CORE™ Outdoor Power warrants, at its option, to repair, or to replace with the same or similar new or refurbished product, or to refund the purchase price as paid by the original purchaser, if inspections shows defects in material and / or workmanship for products delivered to a CORE™ Outdoor Power Authorized Service Center, subject to the below listed application time periods, limitations and exceptions. The repair, replace or refund remedy shall be the sole and exclusive remedy under this limited product warranty. THIS LIMITED WARRANTY IS EXTENDED TO THE ORIGINAL PURCHASER OR TO THE ORIGINAL GIFT RECEPIENT ONLY, AND IS NOT TRANSFERABLE TO SUBSEQUENT OWNERS.

Except as provided by applicable law, the purchaser assumes the risk of loss or damage during transit and transportation and is responsible for packaging, delivery and handling charges incurred in the transport of their product(s) to a CORE™ Outdoor Power Authorized Service Center. Product purchased, used, serviced, or product shipped for repair, from outside the 48 contiguous United States of America or Canada to a CORE™ Outdoor Power Authorized Service Center in the 48 contiguous United States of America or Canada is specifically excluded from this limited warranty. A CORE™ Outdoor Power Authorized Service Center will return warranty repaired or warranty replaced product with transportation, delivery and handling charges prepaid under terms of this limited warranty to the original purchaser and will return such product only to return destinations located in the 48 contiguous United States of America or Canada. Product purchased, used, serviced or product shipped for repair, from outside of the 48 contiguous United States of America and Canada may be provided distinct and separate warranties compatible with such jurisdictional laws, market practices or regional authorized service centers and often the products are in fact unique models which differ as to component parts and regulatory requirements but such products are expressly excluded from coverage under this warranty.

CORE™ Outdoor Power - Limited Product Warranty Statement for CBP 420 Core GasLess™ Blower and Accessories Sold Only in the 48 Contiguous United States of America and Canada, effective September 18, 2012.

A copy of the valid proof of original purchase [which proof documentation provides identification of the product model and the date of original purchase] must be included with the returned product in order to obtain warranty service. This warranty does not apply to damage or failure that CORE™ Outdoor Power determines to be from, repairs made or attempted by anyone other than CORE™ Outdoor Power authorized service personnel, disassembly, modifications /alterations, misuse, neglect, abuse, normal wear and tear, failure to follow directions, improper maintenance, improper storage, improper installation, use of unauthorized or incompatible attachments and accessories, or accidents. The use of non-CORE™ Outdoor Power authorized attachments or accessories, and / or incompatible attachments or accessories will void coverage under this warranty. Furthermore, this warranty does NOT cover additional damage to parts or components due to continued use after operational problem or failure occurs. Should operational problems or failure occur, the product should not be used, but rather delivered as is to a CORE™ Outdoor Power Authorized Service Center for warranty service.

Product Warranty Period:

Residential Application

- **5 Year Warranty** – All products used for residential, [i.e., personal, family or household], non-income producing purposes will be covered by this limited warranty for five (5) years from the original date of purchase.

  EXCEPTIONS:

  - CORE™ Power Cells and Power Cell chargers will be covered by this limited warranty for failures due to a defect in material or workmanship for a period of **one (1) year** from the original purchase date. If upon return of the Power Cell or a Power Cell charger to an authorized dealer for inspection, a warranty adjustment is determined to be necessary due to a defect in material or workmanship of the Power Cell or Power Cell charger, [and the Power Cell is NOT MERELY DISCHARGED], then, the Power Cell and / or Power Cell charger will be replaced free of charge (except for taxes or other legislatively-imposed fees, where applicable).

CORE™ Outdoor Power - Limited Product Warranty Statement for CBP 420 Core GasLess™ Blower and Accessories Sold Only in the 48 Contiguous United States of America and Canada, effective September 18, 2012.

Commercial Application

- **2 Year Warranty** – All products used for commercial, institutional, agricultural, industrial, or for income producing use [e.g. professional landscape services] will be covered by this limited warranty for **two (2) years** from the original date of purchase.

  EXCEPTIONS:
  - CORE™ Power Cells and Power Cell chargers will be covered by this limited warranty for failures due to defects in material or workmanship for a period of **one (1) year** from the original purchase date. If upon return of the Power Cell or a Power Cell charger to an authorized dealer for inspection, a warranty adjustment is determined to be necessary due to a defect in material or workmanship of the Power Cell or Power Cell charger, [and the Power Cell is NOT MERELY DISCHARGED], then the Power Cell and / or Power Cell charger will be replaced free of charge to the original purchaser (except for taxes or other legislatively-imposed fees, where applicable).

Rental Application

- **90 Day Warranty** – All products used for rental or lease use will be covered due to a defect in material and workmanship for a period of **ninety (90) days** from the original date of purchase.

It is recommended that consumers keep their original proof of purchase from the retailer in a safe place for reference should warranty service ever become necessary, e.g., staple to or file with the owner's manual. The reason that the authorized dealer or authorized service center requires a copy of the valid proof of original purchase (e.g., copy of a receipt, an invoice, a bill of sale, etc., which denotes the product model number and date of original purchase) is that it provides important information necessary to qualify your right to receive warranty service.

- It proves the exact date of purchase. Our warranties are time oriented and begin with the date of original purchase.
- Possession of the original bill of sale also indicates that you are likely the original owner (these warranties are non-transferable).
- Also, some units are sold by retailers as "used" or "reconditioned". These denotations or comments that the unit may have been sold "as is" are generally stated on the receipt. Used or reconditioned products are not extended coverage under this warranty.

CORE™ Outdoor Power - Limited Product Warranty Statement for CBP 420 Core GasLess™ Blower and Accessories Sold Only in the 48 Contiguous United States of America and Canada, effective September 18, 2012.

Rental Application – cont'd

Establishing the valid proof of original purchase with identification of product model and the original purchase date rests solely with the original purchaser, or the person to whom the product was originally purchased as a gift.

Parts replaced under warranty

All parts or products replaced under warranty become the property of CORE™ Outdoor Power.

All repair parts and accessories, or replacement products provided to the purchaser by CORE™ Outdoor Power under this warranty are warranted only for the remaining balance of the original product or accessory warranty period.

OTHER LIMITATIONS

This warranty is the complete and exclusive agreement, and sole remedy, between the original purchaser and CORE™ Outdoor Power. It supersedes all other written or oral communications related to this product. CORE™ Outdoor Power provides no other warranties for this product. The warranty exclusively describes all of CORE™ Outdoor Power's responsibilities regarding the product. There are no other expressed warranties. No one is authorized to make modifications to this warranty and purchaser should not rely on any such modification.

CORE™ Outdoor Power - Limited Product Warranty Statement for CBP 420 Core GasLess™ Blower and Accessories Sold Only in the 48 Contiguous United States of America and Canada, effective September 18, 2012.

WARRANTY DISCLAIMER: IN NO EVENT WILL CORE™ OUTDOOR POWER BE LIABLE FOR:

- **ANY INDIRECT, INCIDENTAL, PUNITIVE OR CONSEQUENTIAL DAMAGES ARISING FROM THE SALE OR USE OF THE PRODUCTS SOLD HEREUNDER, OR**
- **ANY AMOUNT IN EXCESS OF THE AMOUNT ACTUALLY PAID TO CORE™ OUTDOOR POWER FOR THE PRODUCTS SOLD HEREUNDER FOR ANY LIABILITY ARISING FROM THE SALE OR USE OF THE PRODUCTS SOLD HEREUNDER. THIS WARRANTY LIMITATION APPLIES BOTH DURING AND AFTER THE APPLICABLE EXPRESS WRITTEN WARRANTY PERIOD OF THIS WARRANTY.**

CORE™ OUTDOOR POWER DISCLAIMS LIABILITY FOR ANY IMPLIED WARRANTIES, INCLUDING WARRANTIES OF "MERCHANTABILITY" AND "FITNESS FOR A SPECIFIC PURPOSE" AFTER THE EXPRESS WRITTEN APPLICABLE WARRANTY PERIOD OF THIS WARRANTY.

THIS WARRANTY GIVES YOU SPECIFIC LEGAL RIGHTS, AND YOU MAY ALSO HAVE OTHER RIGHTS WHICH VARY FROM STATE TO STATE, OR PROVINCE TO PROVINCE. SOME STATES OR PROVINCES DO NOT ALLOW THE EXCLUSION OR LIMITATION OF INCIDENTAL OR CONSEQUENTIAL DAMAGES, SO THE ABOVE LIMITATION OR EXCLUSION MAY NOT APPLY TO YOU. SOME STATES OR PROVINCES DO NOT ALLOW LIMITATION ON HOW LONG AN IMPLIED WARRANTY LASTS, SO THE ABOVE LIMITATION MAY NOT APPLY TO YOU.

This limited warranty is given by OPE, Inc., d.b.a. CORE™ Outdoor Power, 36235 Kerr Dam Road, Polson, Montana USA 59860.

WARRANTY SERVICE

Instructions for Obtaining Warranty Repair Service or Aftermarket Non-Warranty Repair Service:

To arrange for CORE™ Outdoor Power product warranty or aftermarket repair service:

1. Before returning a non-functioning GasLess™ Blower to a CORE™ Authorized Service Center for service, please first determine if the difficulty is potentially due to: 1) a non-functional Power Cell, or 2) a non-functional Power Cell charger, or 3) a non-functional blower tool. To make such determination, first bring your GasLess™ Blower along with, your Power Cell[s] and Power Cell charger to a local authorized CORE™ Outdoor Power products dealer, for inspection and determination as to whether it is your Power Cell or Power Cell charger, and / or the GasLess™ Blower tool that is not functioning properly.

SAFETY NOTICE: ***Do NOT ship your Power Cells for delivery to a local authorized dealer or to a CORE™ Authorized Service Center, as the Lithium-ion Power Cells are restricted and regulated under Dangerous Goods Transport codes and require specialized protective packaging, marking, labeling, and shippers declarations to be safely and legally transported by commercial carriers. Additional note: As of the time of the writing of this warranty statement the US and Canadian Postal Services do not accept for transport CORE™ Power Cells or for that matter, any lithium batteries.***

Note: The GasLess™ Blower will not operate properly, if:

a. The Power Cell is discharged and / or dysfunctional, and / or;
b. if the Power Cell charger is non-functional so as to not be able to provide a recharge to a discharged but otherwise fully functional Power Cell.

2. Your local authorized CORE™ Outdoor Power products dealer should be able to readily assess which, if any, of the three CORE™ Outdoor Power GasLess™ Blower system's components is non-functional [that is, either: A) Your Power Cell: B) Your Power Cell charger: C) Your Gasless™ Blower]. Be sure to bring a copy of your Valid Proof of Original Purchase with you so as to allow the dealer to determine the applicability of your warranty coverage period.

The original purchaser will be able to obtain a free replacement from the local authorized dealer of a Power Cell or a Power Cell charger, if:

a. The CORE™ Outdoor Power local authorized dealer determines that there is a non-functioning Power Cell or Power Cell charger.
b. And that such non-functional component is found to be as a result of a defect in material or workmanship as covered within the applicable terms and period of the limited warranty.

The local authorized dealer should be able to sell to you replacements of the Power Cell, Power Cell charger for non-warranty covered failures of those individual components.

3. If after first ruling out the prospect of a non-functional or defective CORE™ Power Cell, or Power Cell charger, [as per above], the problem is thus determined to require service repair of the GasLess™ Blower tool, carefully package the GasLess™ Blower tool [without the Power Cell], using sufficient packaging materials, and place in sturdy outer boxing to prevent damage during transit for warranty service, or aftermarket non-warranty repair at a CORE™ Outdoor Power Authorized Service Center. **Safety Notice: Do NOT ship either functional or dysfunctional Power Cell(s) to a CORE™ Outdoor Power Authorized Service Center due to restrictive Dangerous Goods Transport regulations.** Ship only the GasLess™ Blower tool for service to a CORE™ Outdoor Power Authorized Service Center as your local authorized CORE™ Outdoor Power products dealer should be able to satisfactorily resolve issues associated with the Power Cells, or the Power Cell chargers.

4. Packaging cartons used for shipping should be of a strong outer packaging and properly sealed.
   c. Complete the attached CORE™ Outdoor Power Authorized Service Request Form provided below. Place the service request form within a separate envelope and place the envelope along with the tool inside the outer shipment packaging.

d. Attach a copy of the valid proof of original purchase [which documentation identifies the product model and the date of original purchase] with the service request form. Please retain for your records, your original of the valid proof of original purchase.

5. We recommend the package be shipped insured for full value utilizing ground freight. The recommended freight couriers for delivery to a CORE™ Outdoor Power Authorized Service Center are either, FedEx, UPS, US Postal Service or Canada Post. CORE™ Outdoor Power will not be responsible for lost shipments or product damage during transit to the CORE™ Outdoor Power Authorized Service Center. In case of lost, missing packages, or damage during shipment to the CORE™ Outdoor Power Authorized Service Center, a claim with the shipper must be initiated by and pursued by the purchaser. Freight costs to the CORE™ Outdoor Power Authorized Service Center are to be prepaid by the purchaser.

6. If the product is covered under warranty the return shipping cost will be paid by CORE™ Outdoor Power Authorized Service Center, with such freight prepaid terms being applicable to only return destinations in the contiguous 48 United States of America or Canada as per this limited warranty. CORE™ Outdoor Power products sold within Alaska and Hawaii are likely to have a separate limited warranty policy.

7. If upon inspection of the returned product it is determined that the product is not covered under this warranty, you will be contacted with costs estimates for non-warranty repair work and parts costs, and return freight delivery costs as per CORE™ Outdoor Power Authorized Service policies and procedures.

You may locate the nearest CORE™ Outdoor Power Authorized Service Center by searching our online authorized service center locator at WWW.COREOUTDOORPOWER.COM.

Should you require assistance or have questions concerning this CORE™ Outdoor Power Warranty Statement, or need assistance in obtaining warranty or aftermarket non-warranty repair service, you can contact our Customer Product Support Department toll free at 1-855-831-2673 [Monday through Friday, between 8AM and 5PM, Mountain time], or contact us through the web at WWW.COREOUTDOORPOWER.COM.

WARRANTY SERVICE

Can I have parts sent to me under the CORE™ Outdoor Power warranty?

Unfortunately, we are unable to send out warranty replacement parts directly to consumers. However, local authorized retailers or dealers may assist consumers directly with warranty or aftermarket service replacement of Power Cells, Power Cell chargers and CORE™ accessories.

As our warranty states, warranty service is available with valid proof of original purchase through CORE™ Outdoor Power's Authorized Service Center. These policies exist for many reasons. First and foremost is your safety. By having the authorized service center service the product, we are assured that the unit is being repaired by properly trained service technicians. The service technicians will also inspect the unit to be sure that there are no other apparent repairs needed as well. These additional repairs may not be obvious to an untrained person, or to a person without appropriate analytical testing and repair equipment.

Secondly, concerns assurance the warranty repairs provide for continuity of the original period of warranty coverage for the product or accessories. If we send a warranted part out at no-charge and dismiss the labor provided section of the warranty we cannot be assured that the warranted part is installed properly. Conversely, if a consumer purchases a service part and installs it themselves, the consumer then assume all liability for the repairs. Any repairs not made by CORE™ Outdoor Power's Authorized Service Center will void the continuance of the warranty on the product.

We apologize for any inconveniences and want to assure you that our company stands behind the warranty fully. Please comply with the warranty guidelines for warranty service by having the unit properly serviced at a CORE™ Authorized Service Center.

CORE™ Outdoor Power

Authorized Service Request Form

Date:_____

Company or Institution Name [*if applicable*]:

_____

Name of Purchaser [*or name of contact person for Company or Institutionally-owned product*]:

_____

Physical Return Delivery Address
[Note: *we are unable to deliver to PO boxes*]:
Street Address:

_____

Address continued:

_____

City: _____, State / Province: _____

Country [*circle which applies*] USA/Canada Zip/Postal Code: _____

Correspondence mailing address [*if different from delivery address*]:
Street Address [*or PO Box*]:

_____

Address continued:

_____

City: _____, State / Province: _____

Country [*circle which applies*]: USA / Canada Zip/Postal Code: _____

Daytime Phone Number: _____

Extension: _____ Email Address: _____

Mark (X) Your Preferred Method of Contact:
Phone ____, Email _____, Postal Mail _____

Date of original purchase: _____

CORE™ Outdoor Power

Authorized Service Request Form – *cont'd*

Tool or accessory Model Number: _____

Tool or accessory Serial Number: _____

Type of usage [mark with an X]:

Personal Home Use _____
Commercial / Institutional Use _____
Rental Tool Use _____

Description of problem with product / part:

Attach a copy of valid proof of original purchase

[*which documentation identifies product model and date of original purchase*]